United States Patent

Shelton

[15] **3,691,563**

[45] **Sept. 12, 1972**

[54] DUAL BAND STRIPLINE ANTENNA

[72] Inventor: **Philip L. Shelton**, Scottsdale, Ariz.

[73] Assignee: **Motorola, Inc.**, 2, Franklin Park, Ill.

[22] Filed: **Dec. 11, 1970**

[21] Appl. No.: **97,147**

[52] **U.S. Cl.** .....**343/771**, 333/84 M

[51] **Int. Cl.** **H01q 13/10**

[58] **Field of Search** .....343/767, 771; 333/84 M

[56] **References Cited**

UNITED STATES PATENTS

2,877,427	3/1959	Butler	343/770
3,044,066	7/1962	Butler	343/771
3,569,973	3/1971	Brumbaugh	343/771
3,587,110	6/1971	Woodward	343/814

Primary Examiner—Eli Lieberman

Attorney—Mueller and Aichele

[57] **ABSTRACT**

A dual band antenna is disclosed in which the radiating elements for each band are slots in a conductive sheet and in which the slots are fed by wave guides and stripline distribution means. The conductive sheet is an outside layer of a sandwich comprising two outside conductive layers and two sheets of dielectric between said outside layers and said stripline distribution means or transmission line, between the dielectric sheets. Two additional similar sandwiches are used having therein transmission lines and couplings thereto for the two waves to be radiated. The outside layer of a middle sandwich is in close contact with an outside layer of the two other sandwiches, whereby there is no radiation from between the sandwiches. To make this close contact possible, the sandwiches are made with flat smooth outside surfaces and the sandwiches are not held together in a manner that may cause a bumpy surface.

5 Claims, 5 Drawing Figures

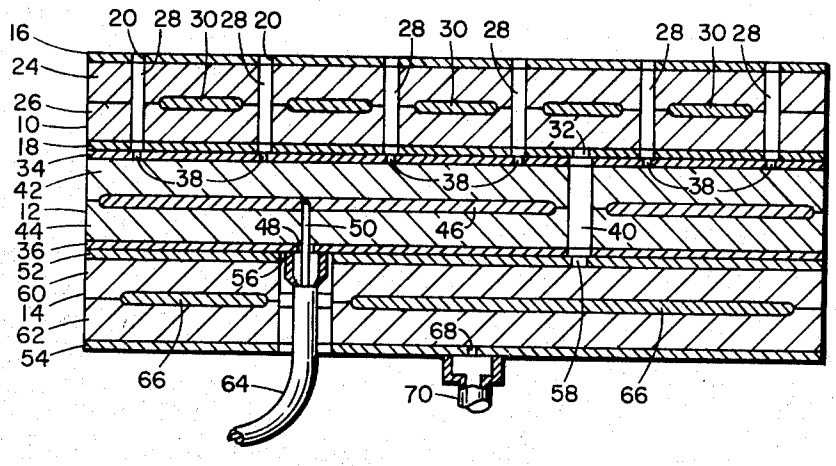

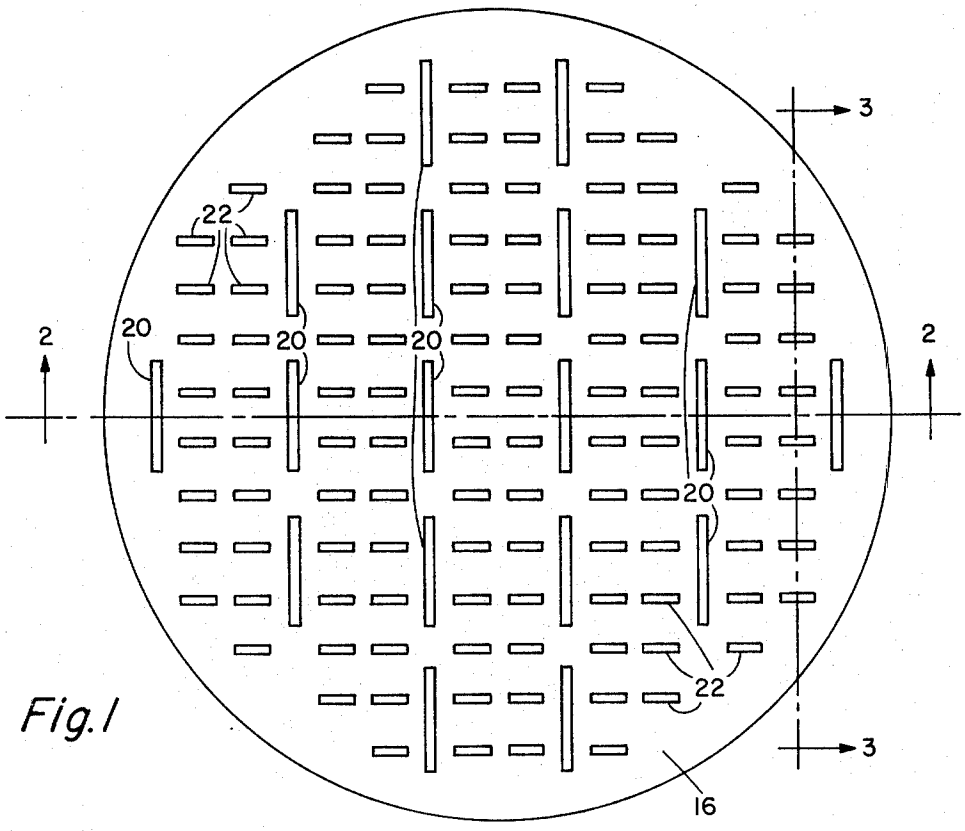

Fig. 1

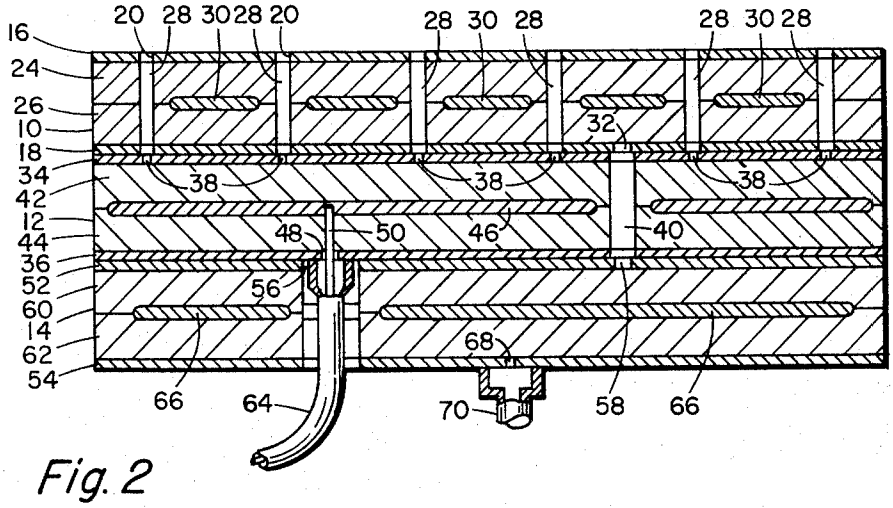

Fig. 2

INVENTOR.
Philip L. Shelton
BY
Mueller & Aichele
ATTY'S.

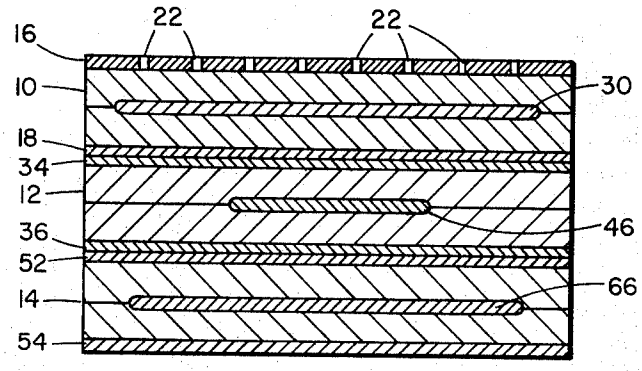

Fig. 3

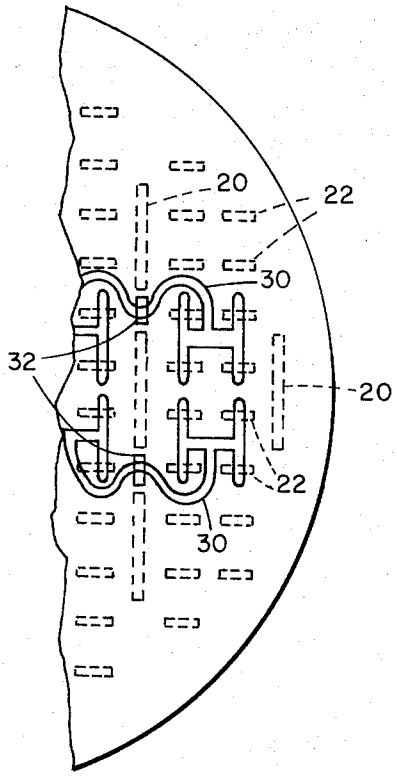

Fig. 4

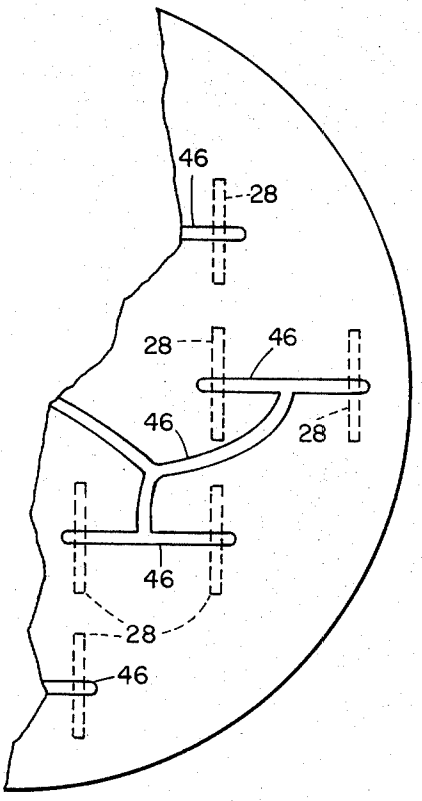

Fig. 5

INVENTOR.
Philip L. Shelton
BY
Mueller & Aichele
ATTY'S.

DUAL BAND STRIPLINE ANTENNA

BACKGROUND

It is often necessary in radio direction finding operation to transmit waves in two different wave bands into the same space and often in the same direction. While prior art devices for so radiating waves in different bands are known, they are often large, bulky devices using high frequency plumbing for the energization thereof, which are difficult and expensive to make.

It is an object of this invention to provide an improved dual radio wave radiating device.

It is an object of this invention to provide a dual radio wave radiating device that can be made to a great extent by printed circuit techniques.

SUMMARY

According to the invention, a structure comprising three sandwiches in close electrical contact are provided. Each sandwich includes two outside layers of a conductive material such as copper and two intermediate sheets of insulating material between the outside layers and a middle layer comprising a transmission line of the stripline type which is used as an energy distribution means. The top or first layer has a plurality of parallelly arranged slots cut therethrough to act as radiator elements for waves of one frequency band, and another plurality of parallelly arranged slots cut therethrough to act as radiator elements for the waves of another frequency band. The first plurality slots may all be of the same size but different in size from the slots of the second plurality thereof, and the slots of the two pluralities thereof may be arranged perpendicularly to each other. The first plurality of slots may be continuations of holes through the two dielectric sheets and through the other outside sheet, the insides of the holes having conductive material deposited thereon and electrically connected to the two outside layers to produce wave guides. The other plurality of slots extend only through the outside layer and the intermediate layer of the top sandwich acts only as a stripline feed means or distribution or transmission line for the slots of the other plurality thereof. The conductive top layer of the middle or second sandwich has slots in position to register with the wave guide through the top sandwich. The center layer of a middle sandwich is a stripline transmission line for feeding the slots in the top layer thereof. Wave guides also extend through the middle sandwich and are positioned to feed the stripline middle layer of the top sandwich. The top layer of the bottom sandwich has slots therein positioned to register with the wave guides through the middle sandwich and the center layer of the bottom sandwich is a stripline transmission line to feed the wave guides through the center layer. A hole is provided through the bottom layer for connection to the outside layer of the middle sandwich of means to feed the center layer of the middle sandwich. The transmission line in the bottom sandwich is fed by a wave guide coupled through a hole in the bottom layer of the bottom sandwich to the transmission line in the bottom sandwich. Each of the sandwiches has smooth, level outside layers which are to be in contact whereby upon contact to the three sandwiches, they are in good electrical contact, whereby radiant wave energy cannot leak out from between the several sandwiches. This good electrical contact is provided by fastening the several layers of the sandwiches together in a manner which does not provide bumps or irregularities on the surface of the sandwiches as if the sandwiches were affixed together by rivets. The several layers of the sandwiches are therefore glued or otherwise bonded together and the insides of the holes through the sandwiches have conductive material plated thereon. Since the conductive parts of the several sandwiches can be made by printed circuit techniques, and since the holes in the several sheets of dielectrics are straight through and of simple shape, the disclosed dual band antenna can be made quite economically in single or large quantities.

DESCRIPTION

The invention will be better understood upon reading the following description in connection with the accompanying drawing in which:

FIG. 1 is a plan view of the antenna embodying this invention,

FIG. 2 is a section of FIG. 1 on line 2—2 thereof,

FIG. 3 is a section of FIG. 1 on line 3—3 thereof,

FIG. 4 is a fragmentary view of the transmission line of the top sandwich showing the positions of the several slots in the top conductive layer in dotted lines for explanatory purposes, and

FIG. 5 is a fragmentary view of the transmission line of the middle sandwich and also showing the relative positions of the several slots to the transmission line in dotted lines.

Turning first to FIGS. 1 and 2, a top sandwich **10**, a middle sandwich **12** and a bottom sandwich **14** are shown. The top sandwich **10** comprises a top conductive layer **16** and a bottom conductive layer **18**. The top layer **16** has a plurality of slots **20** formed therein. While **16** slots **20** are shown, there may be as many thereof as is desired. While all of the slots **20** are shown as being parallel and arranged along equidistant lines, the slots **20** may be arranged as is desired. A second plurality of slots **22** are also formed through the layer **16**, the slots **22** being smaller than the slots **20** and being arranged between and perpendicular to the slots **20**. Again the number and positions of the slots **22** may be as desired.

The sandwich **10** also comprises two sheets **24** and **26** of dielectric material between the layers **16** and **18**. Holes **28** of the same size and shape as the slots **20** extend through the two sheets **24** and **26** and register with the slots **20**. A stripline transmission line **30** is positioned between the layers **24** and **26**. The bottom layer **18** has slots cut therethrough registering with the holes **28**. The insides of the holes **28** are plated in a known manner with a conductive material, this conductive material being electrically connected to the layers **16** and **18**, whereby the holes **28** act as wave guides for leading energy to be radiated to the radiating slots **20** as will be further explained. The transmission line **30** is arranged in such manner that it is insulated from the wave guides **28**. A plurality of holes **32**, only one of which is shown in FIG. **2**, is provided in the bottom layer **18** for purposes to be described. The layer and sheet **16** and **24**, the stripline **30**, and the layer and sheet **26** and **18** are fixed together as by gluing or otherwise bonding, the stripline **30** being so thin that it does not interfere with this fixing together, whereby the outside layers of the sandwich are quite level and smooth.

The middle sandwich **12** comprises an upper and a lower conductive layer **34** and **36**. The upper layer **34** has slots **38** therein registering with the wave guides **28** but of a smaller area than the wave guides **28**. A wave guide **40**, made like the wave guide **28**, extends through the layers **34** and **36** and through the intermediate dielectric sheets **42** and **44** and registers with a hole **32**. While only one wave guide **40** is shown in FIG. **2**, there may be as many thereof as there are holes **32**. A transmission line **46** extends between dielectric sheets **42** and **44**. The transmission line **46** is insulated from the wave guide **40**. A hole **48** is provided in the bottom layer **36** so that the interconductor **50** of a coaxial line **64** may extend through the hole **48** and be insulated from the layer **36** and be connected to the transmission line **46**. The layer **12** is made like the layer **10** and has smooth and level outside surfaces.

The bottom sandwich **14** has an upper and a lower conductive layer **52** and **54**. The layer **52** has a relatively large hole **56** therethrough which is concentric with the hole **48**, and as many holes **58** as there are wave guides **40**, the holes **32** and **58** being somewhat smaller in area than the wave guides **40** and registering therewith. The hole **56** continues through the intermediate dielectric sheets **60** and **62** and the bottom layer **54** and the coaxial cable **64** extends into the hole **56**. The outside conductor of the coaxial cable is conductively connected to the layer **36**, and the inner-connector of the coaxial cable **64** is connected to the conductor **50**. A transmission line **66** is positioned between the sheets **60** and **62**. A hole **68** is provided in the bottom layer **54** and a wave guide **70** is conductively fixed to the layer **54** around the hole **68**.

In operation, radiant energy which is to be radiated by the slots **20** is applied by way of the coaxial conductor **64** and the inter-conductor **50** to the transmission line **46** which supplies energy to the wave guides **28** by way of the holes **38** by radiation, in effect, across the dielectric sheet **42**. The way that this is accomplished may be understood upon observing FIG. **5**. The transmission line **46** has portions which extend across the wave guide **28**, the dotted lines in FIG. **5** representing the position of the wave guides **28**. The transmission line **46** is connected to the pin **50**, the length of the transmission line from the pin **50** to the several wave guides **28** being such as to provide energy at the desired phase relation to the several wave guides **28** and therefore to the several slots **20** for radiation therefrom in a pattern in a known manner. As is seen in FIG. **5**, the connections comprising the configuration whereby the transmission line **46** will not interfere with other elements of the middle sandwich **12**, such as the wave guides **40**, is due to the fact that the transmission line **46** may be shaped in any convenient manner.

The slots **22** are fed by energy supplied through the wave guides **70**. This energy is radiated across the dielectric **62** to the transmission line **66**. The energy in line **66** is radiated across the dielectric **60** to the wave guide or guides **40** through the holes **58**, only one of each being shown. The energy from the wave guide **40** is radiated to the transmission line **30** through the hole **32** and the energy in the transmission line **30** is radiated to the slots **22**. Attention is called to FIG. **4** in which a part of the transmission line **30** is shown in relation to the holes **32** and the slots **20** and **22**, the position of the latter being shown in dotted lines in FIG. **4**. Again, the connections can be routed to avoid obstacles such as the wave guides **28** in constructing the transmission line **30**.

No energy that is fed to the coaxial line **64** or to the wave guide **70** leaks out between the sandwiches **10**, **12** and **14**, since the layers **18**, **34**, **36** and **52** are made very smooth and level whereby the contact between these layers is a good electrical contact. While the coaxial line **64** and wave guide **70** feeds are shown, whatever feeds that are convenient may be used. The positioning and size and shape of the slots **20** and **22** may be what is convenient for the wave bands to be radiated in desired patterns.

While both groups of radiating slots **20** and **22** and their feed means are shown and described, it will be clear that only one group of slots **20** or **22** and the feed means therefor need be provided, or, if both groups of slots and their feed means are provided, only one group of slots may be energized, whereby only one group of slots will radiate. Furthermore, the radiations from the two groups of slots are independent of each other.

What is claimed is:

1. A dual antenna comprising:

a plurality of sandwiches, each sandwich including two conducting layers, two dielectric sheets between said conducting layers, and a transmission line between each two dielectric sheets,

the outer surface of at least one of said conducting layers being smooth and level,

means for holding said sandwiches together with said smooth layers in contact,

means for applying radiatable energy to one of said sandwiches,

means to so couple said sandwiches that said energy arrives through said contacting layers to another of said sandwiches, whereby due to the contact of said smooth layers, energy is not radiated out from between said sandwiches,

one of the two conducting layers of said another sandwich is an outer conductive layer having two pluralities of holes therethrough,

one of said plurality of holes being the ends of respective wave guides through said another sandwich and energized by said transmission line in said one sandwich, and

said other plurality of holes being energized by the transmission lines in said another sandwich.

2. The dual antenna of claim **1** in which one of the conducting layers of said one sandwich is an outer conductive layer and said one sandwich includes at least one wave guide therethrough for energizing said transmission line in said other sandwich, and

means to apply energy to at least one wave guide and to said transmission line in said one sandwich.

3. The dual antenna of claim **2** in which said means to apply energy comprises a third sandwich having outer layers of conductive material, one layer thereof being smooth and level and being held against said one sandwich,

said third sandwich includes two dielectric sheets and a third transmission line between said last mentioned dielectric sheets,

wave guide means for applying energy to said third transmission line through a hole in the outer conductive layer of said third sandwich, and

coaxial means for applying energy to the transmission line of said one sandwich through said third sandwich.

4. The dual antenna of claim 3 in which the outer conductor of said coaxial line is connected to a conductive layer of said one sandwich, and

the inner conductor of said coaxial line is conductively connected to the transmission line in said one sandwich.

5. The dual antenna of claim 4 in which the conductor of said wave guide is connected to the outer conductive layer of said third sandwich.

* * * * *