I. WAGEMAKER.

FILING TRAY.

APPLICATION FILED JAN. 17, 1921.

1,435,351. Patented Nov. 14, 1922.

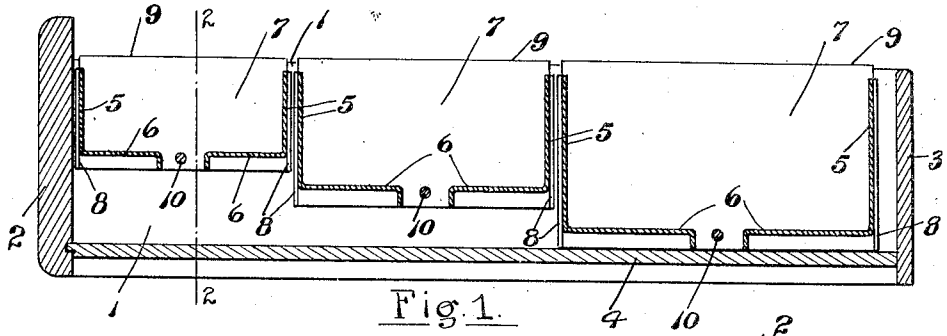

Fig. 1.

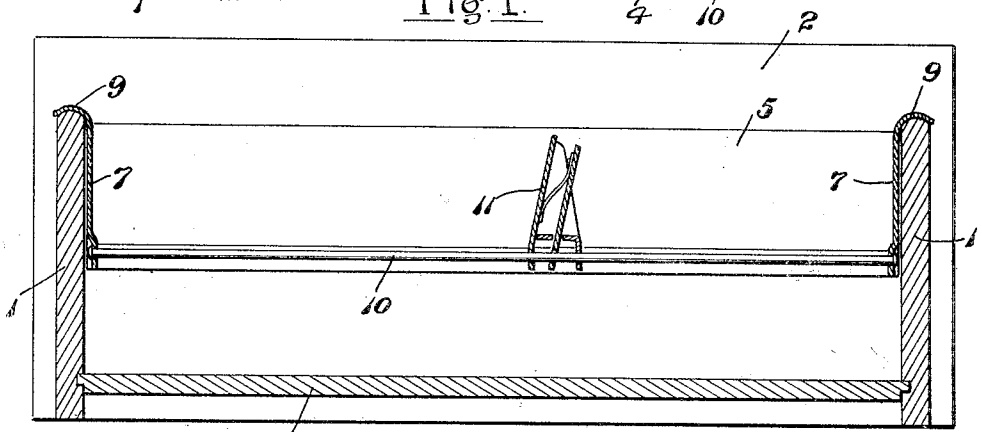

Fig. 2.

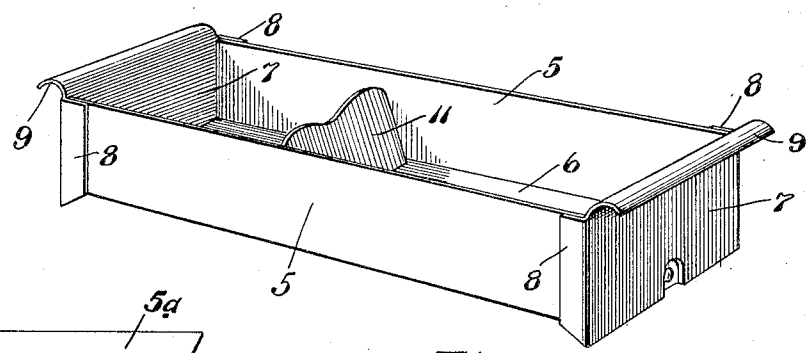

Fig. 3.

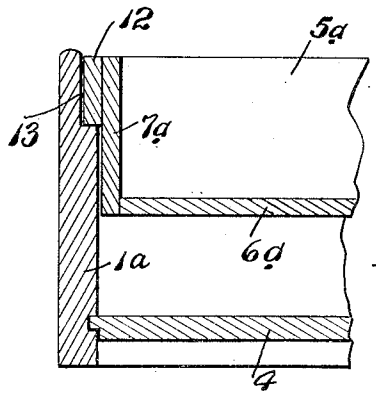

Fig. 4.

Inventor

Isaac Wagemaker

By Frank E. Liverance, Jr.

Attorney.

Patented Nov. 14, 1922. 1,435,351

UNITED STATES PATENT OFFICE.

ISAAC WAGEMAKER, OF GRAND RAPIDS, MICHIGAN.

FILING TRAY.

Application filed January 17, 1921. Serial No. 437,717.

To all whom it may concern:

Be it known that I, ISAAC WAGEMAKER, a citizen of the United States of America, residing at Grand Rapids, in the county of Kent and State of Michigan, have invented certain new and useful Improvements in Filing Trays; and I do hereby declare the following to be a full, clear, and exact description of the invention, such as will enable others skilled in the art to which it appertains to make and use the same.

This invention relates to filing trays adapted to be placed in and suspended from the upper edges of the sides of a receptacle, such as a desk drawer or the like, in which a number of the trays may be placed side by side so that all of the trays have their upper edges in the same plane irrespective of their depths, and thereby bring all of the upper edges of filing cards placed vertically in the trays in the same plane with better access thereto for examination. The invention has for its primary object and purpose, the construction of filing trays of this character capable of accomplishing the results named, and this in a very simple and economical manner and at low cost of manufacture.

For an understanding of the invention and the constructions embodying the same by which the results stated are attained, reference may be had to the accompanying drawing and the description of the constructions illustrated therein, in which drawing,

Fig. 1 is a vertical longitudinal section through a desk drawer in which a number of the trays are placed, the section being taken transversely of the trays located between the sides of the drawer.

Fig. 2 is a vertical transverse section through the drawer, substantially on the plane of line 2—2, of Fig. 1, the section being lengthwise of one of the trays.

Fig. 3 is a perspective view of one of the filing trays, and

Fig. 4 is a fragmentary vertical transverse section through a drawer of modified construction, with a tray of modified construction associated therewith.

Like reference characters refer to like parts in the different figures of the drawing.

The receptacle in which the filing trays are placed is shown as a drawer adapted for use in a desk or other article of furniture of similar nature. The drawer has sides 1, a front 2, back 3 and a bottom 4, all of well known and usual construction. The trays used therewith in the form shown in Figs. 1, 2 and 3 are of sheet metal, with vertical sides 5 from which bottom sections 6 are bent inwardly toward each other at the lower edges of said sides. The ends 7, also of sheet metal include side flanges 8 which embrace the outer sides of the ends of sides 5 of the trays, being secured thereto in any suitable manner. Each end 7 at its upper edge is extended a distance and curved upwardly and outwardly, making curved ledges 9 which are adapted to conform to and rest against the upper edges of the sides 1 of the drawer. The usual guide rod 10 is disposed lengthwise of the tray between the bottom sections 6, on which the usual follower 11 is slidably mounted, this being a well known feature of filing receptacles and no part of the present invention.

The trays of different depths are located in the drawer side by side and between the sides of the drawers. The ledges 9 hook over the sides of the drawer, thereby suspending the trays, and bring the bottoms of the shallower trays above the bottom 4 of the drawer but with the upper edges of the sides of all the trays in the same plane. The filing cards carried in the trays are readily seen, irrespective of their size or the depth of the tray and the drawer filled with said trays presents a completely filled appearance and not the irregular appearance that follows on placing trays of different depths in a drawer against the bottom of the drawer. The trays may be arranged in the drawer in any desired manner.

In Fig. 4, a modification in structure is shown, the trays being of wood with sides 5^a, ends 7^a and bottom 6^a, while against the outer side of each end and at the upper portion thereof a horizontal cleat 12 is secured by nails, glue or in any other suitable manner to make a permanent connection. The sides 1^a of the drawer at their upper portions and on their inner sides are cut away to make recesses 13 shaped to receive the cleats 12 whereby the trays may be suspended from the sides and between them, effecting the same results and having the same advantages as the first described construction of tray.

This invention is very practical and useful. Its value is obvious. The appended claims define the invention and all forms of construction coming within their scope

are to be considered as comprehended by the invention.

I claim:

1. In combination with a drawer having parallel vertical sides, a plurality of separated and interchangeable trays of different depths located side by side transversely of the drawer between the sides thereof, and means at the ends of the trays engageable with the sides of the drawer for suspending said trays transversely of the drawer with the bottoms of the trays in different horizontal planes and with the upper edges of the sides of the trays in substantially the same horizontal plane.

2. In combination with a receptacle having vertical sides, of a plurality of separate interchangeable trays of different depths located side by side in the receptacle between the sides thereof, and means at the ends of the trays for suspending the trays on and from the sides of the receptacle with the bottoms of the trays in different horizontal planes and the upper edges of the sides of the trays in substantially the same horizontal plane, substantially as described.

3. In combination with a receptacle having vertical sides, of a plurality of separate interchangeable trays of different depths located side by side in the receptacle between the sides thereof, each of said trays at each end having an outwardly projecting ledge passing over the upper edges of the sides of the receptacle for suspending the trays from and between the sides of the receptacle, with the bottoms of the trays in different planes and with the upper edges of the sides of the trays in substantially the same horizontal plane, substantially as described.

In testimony whereof I affix my signature.

ISAAC WAGEMAKER.