2 Sheets—Sheet 1.

J. MARTIN.

SPINNING MULES AND JACKS.

No. 193,884. Patented Aug. 7, 1877.

Fig. 1.

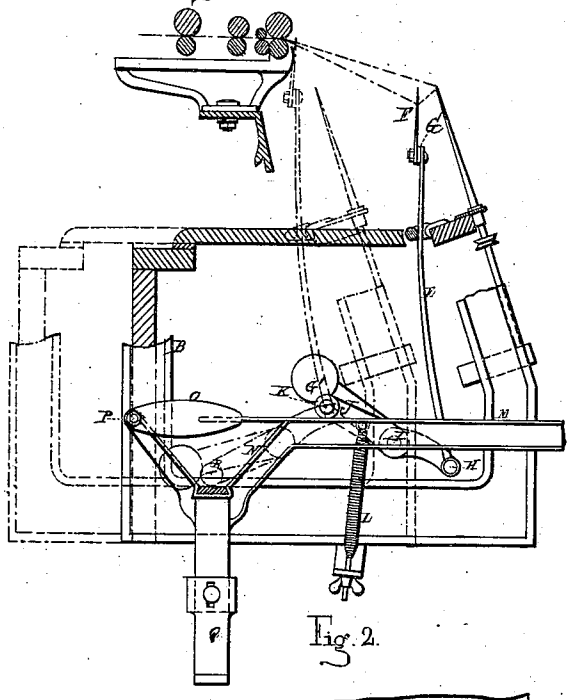

Fig. 2.

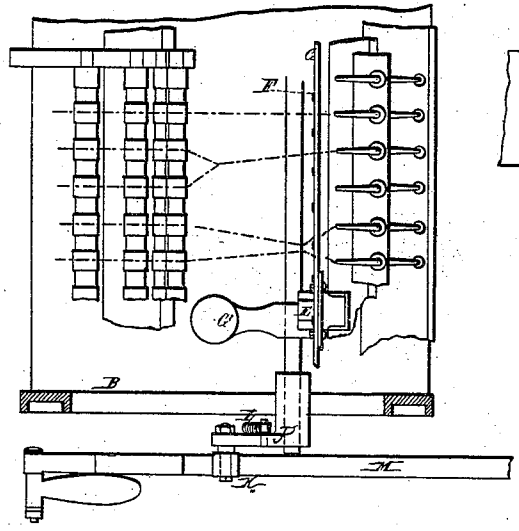

Fig. 3.

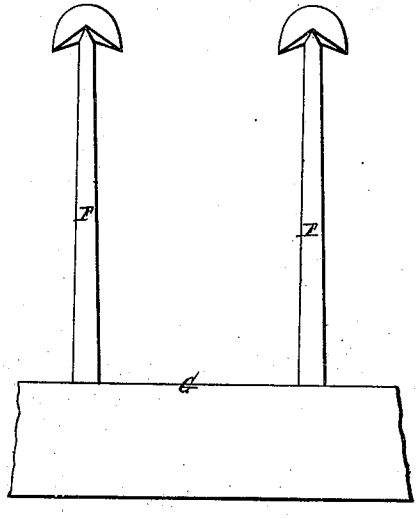

Witnesses:
Ewell & Fick
Aug. A. Nicholson.

Inventor:
Jules Martin
by A. Pollok
his attorney.

N. PETERS, PHOTO-LITHOGRAPHER, WASHINGTON, D. C.

2 Sheets—Sheet 2.

J. MARTIN.

SPINNING MULES AND JACKS.

No. 193,884. Patented Aug. 7, 1877.

Fig. 1.

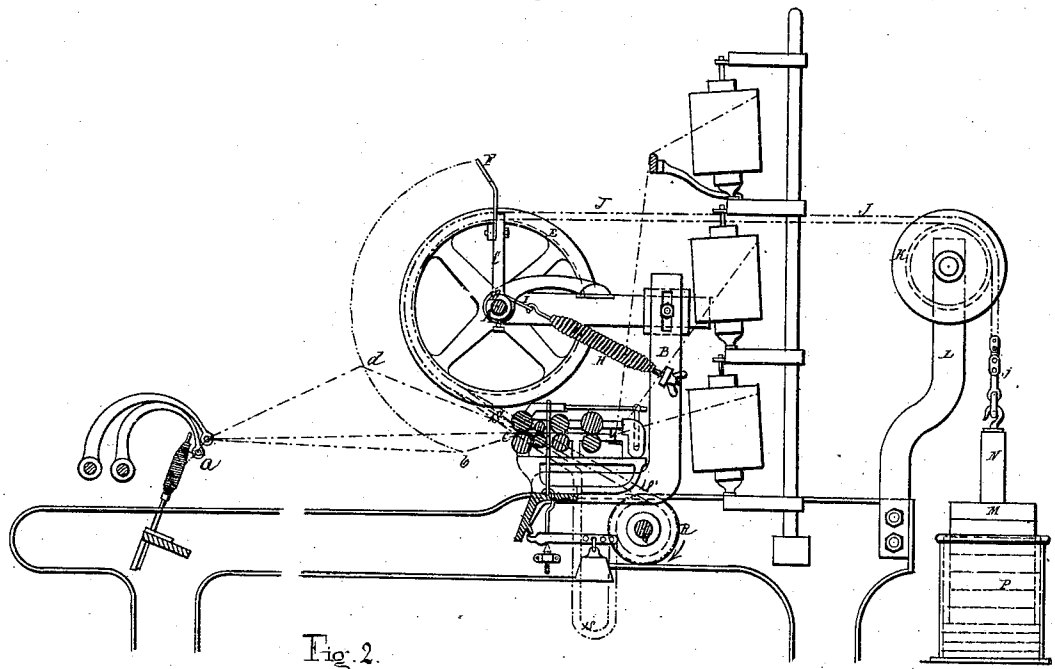

Fig. 2.

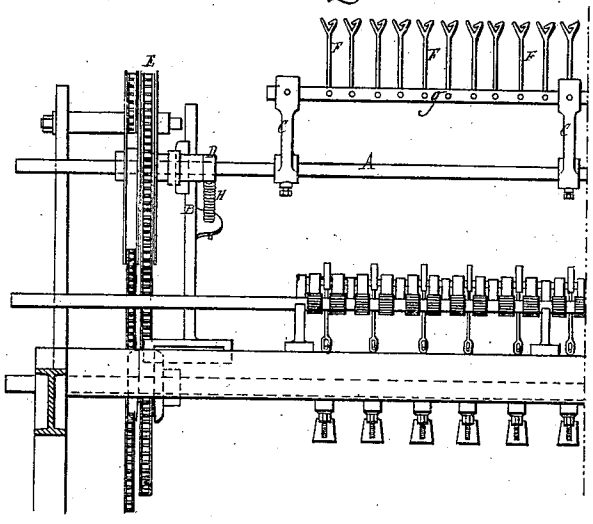

Fig. 3.

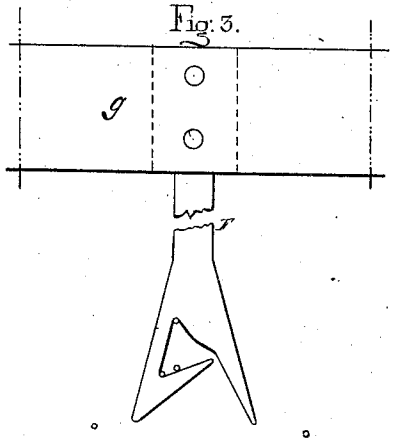

Witnesses:
Ewell & Fisk
Aug. A. Nicholson

Inventor:
Jules Martin
by A. Pollok
his atty.

N. PETERS, PHOTO-LITHOGRAPHER, WASHINGTON, D. C.

UNITED STATES PATENT OFFICE.

JULES MARTIN, OF REIMS, FRANCE, ASSIGNOR TO SOCIETÉ DOUPHINOT MARTIN ET DESQUILBET, OF SAME PLACE.

IMPROVEMENT IN SPINNING MULES AND JACKS.

Specification forming part of Letters Patent No. **193,884**, dated August 7, 1877; application filed June 12, 1877.

To all whom it may concern:

Be it known that I, JULES MARTIN, of the city of Reims, in the Republic of France, have invented certain new and useful Improvements in Apparatus to be Used in Connection with Spinning Mules and Jacks, for the purpose of breaking double twists, of which the following is a specification:

My invention relates to certain improvements in spinning mules and jacks, having for their object the breaking of threads or yarns which have become defective by having twisted around them other yarns or threads. In the spinning of yarns or threads it happens not unfrequently, when two threads are spun in close proximity, and are simultaneously wound upon the same bobbin, that they form one thread of a double thickness, which, if the operator be not very careful in removing, constitutes in the tissue which is afterward produced with such yarn or thread a very serious defect, and which considerably depreciates the value of such tissue.

This one thread twisting around the other is occasioned by the breakage of one of the threads, which, by its rotary movement, is thrown upon and becomes entangled with the adjoining thread.

The object of my invention is to automatically break this double interlaced thread or twist at the very time when it is formed, in such a way as that the operator whose business it is to watch the work of the spinning-jack may receive immediate notice of such occurrence, and to remove the defective part of the thread, and reconnect sound portions of the same and single threads. To attain this object I have devised the means which I apply, in the manner hereinafter shown and set forth, to self-acting spinning-machines, or spinning jacks or jennies as they are often termed; and the said means consists in the application and use of hooked needles mounted upon a needle carrier or bar which is arranged on the carriage, or upon the frame of the spinning-machine, and receives a reciprocating movement, such as to engage the needles between threads the formation of double twists in which it is proposed to avoid.

My invention, therefore, consists in the combination of a hooked-needle-carrying bar, situated at any point of the spinning-machine, and operating by the interposition of its needles between the threads. Upon this principle an infinite number of arrangements can be devised, all within the scope of my invention; but I will confine myself to the description and illustration of two, differing from each other in details, such as the particular form of the hooks and the manner in which movement is imparted to them.

The first arrangement is shown on Sheet No. 1. In said drawing, Figure 1 is an elevation, and Fig. 2 a plan view. Fig. 3 represents, on an enlarged scale, a portion of the needle-carrying bar. In this arrangement the twist-breaking mechanism is mounted upon the carriage, and is therefore movable with it perpendicularly to the spinning-machine.

In said Fig. 1, I have shown, in full lines, the position occupied by my attachment when the carriage is on its way back to its starting-point, and is, say, about O^m 20 from the drawing-rolls, the dotted lines indicating the position of the apparatus when the carriage is brought home.

The double-twist-breaking needles F are the essential organs of the apparatus, and are formed on the end of their extremities into double crotchets or hooks. They are all mounted upon a bar or needle-carrier, G, extending in a line parallel to and throughout the whole length of the jack. It will be observed that these hooked or crotcheted needles are mounted upon the bar at regular intervals apart, opposite to or facing the center lines of the spaces between the bobbins on the carriage, so as to catch the angle formed by two threads interlacing, to form what I term a "double twist." The needle-carrier is supported by means of connecting-rods E, which are jointed at H to tilting levers, or to cranks having a counter-weight, G′, upon an extension thereof.

A similar mechanism is arranged at the other end of the bar. In the drawings, however, only one is shown, representing therefore but one of the connecting-rods and

weighted cranks before referred to. The connecting-rods, through the weighted cranks, have an oscillatory movement upon the arbor I, which extends the whole length of the jack. Upon this arbor is secured, by keys or otherwise, a lever, J, to the extremity of which is applied a roll, K, which, during the movement of the carriage, follows and rolls upon the rail M. This rail is, in the main, horizontal. At N it inclines downward, and then upward again at its terminus, where a movable olive-shaped piece, O, is hinged at P. A helical spring, L, has one of its extremities attached to the carriage, while the other is made fast to the lever J, and thus aids the counter-weight on the crank in keeping the roller on the rail. This railroad may be applied, according to the general arrangement of the jack, either to the frame of the jack or upon the floor.

In the drawings I have shown the same fixed to the floor through the intermediary of supports Q, secured into the ground.

Having thus described the construction and arrangement of the several parts constituting my double-twist-breaking device, I shall now proceed to describe its functions and operation. Supposing the carriage, during the winding up of the bobbins, to have reached a distance of, say, O^m 20 from the drawing-rolls, at this moment the roller K will roll along the horizontal portion of the rail, and the apparatus will be inactive—that is to say, the hooked needles will be between the threads or yarns to be wound; but as the carriage advances toward its terminus of the rail at P, there finding no longer any support, it will drop into the depression R, formed in the rail, and the lever, actuated by the spring L, will cause the arbor I to rotate or tilt, and thus, through the intermediary of the weighted cranks G′ and the connecting-rods E, by the sudden movement, throw up the bar with its crocheted needles, which thus become engaged within the spaces of the threads close by the drawing-rolls.

The carriage, on starting again on its drawing or outward movement, will force the roller K up the incline N of the rail, whereby a gentle downward movement will be imparted to the bar. During this downward movement or descent the hooks of the needles F become engaged with the angles formed by two threads which have become united, and will inevitably cause them to break. When the roller has about reached the top of the inclined rail it will lift the movable piece O, which will then drop back, actuated by its own weight, after the roller shall have passed the position indicated in dotted lines.

Another arrangement of my said apparatus is shown in Plate 2, differing from the one first described in the essential particular that it is mounted upon the frame of the jack in contradistinction to its being mounted on an independent rail separate from said jack, as in the arrangement before shown. The said apparatus is combined with that part of the jack which is stationary, and is shown in Fig. 1, which is a side elevation, and in Fig. 2, which is a front view of the same. Fig. 3 represents, on an enlarged scale, the hook-needle as mounted upon the carrier. The needle-shank is here shown broken off because of the want of space on the sheet.

Above the line of the drawing-rolls is situated an arbor, A, which extends the whole length of the jack, and is supported at suitable intervals apart by means of brackets B. Upon this arbor are mounted supports C, which carry the cross-bar *g*, to which are secured, by rivets or otherwise, the twist-breaking hook-needles F. The arbor A, moreover, is provided with a double-grooved pulley, E, the object of which is to receive and impart rotary movement. It is further provided with sleeves or rings D, which are acted upon by springs H, through the intermediary of strips of leather I, which are wound around the periphery of said rings or sleeves. To one of the grooves of the pulley E is attached a chain or cord, J, which, passing over a pulley, K, held up by a bracket, L, carries at its extremity a weight, M, the object of which is to add to and aid the action of the spring H, in order to raise up the whole system of twist-breaking devices. In order that this action may be properly regulated according to the requirements of the work, I prefer to divide the weight M into a number of disks, through the eyes of which the central spindle N passes. It will be understood that, according to the force required, more or less such disks are used. The course of the weights, however, is limited by a stationary weight-receiver, P, in the bottom of which are placed a number of disks to regulate the course.

The arbor Q of the jack carries a grooved pulley, R, so placed as to face the pulley E. A chain, S, is secured by one of its extremities into the pulley E, its other extremity being fastened in the groove of the pulley R. The point of attachment of the chain into the groove of the pulley E is, however, variable at pleasure, in order to enable the operator to regulate the precise moment when the operation of the crocheted needles is to take place. The hooked needles in this machine are placed upon the carrier or arbor *g* in such a way as that when dropped they will fall into the spaces midway between two neighboring threads. They may, however, be distanced along the bar in any way, according to the spaces between the drawing-rolls.

The shape which I have given these hooked needles will be understood by reference to Fig. 3. It will be seen from what has been said that the operation of this apparatus is as follows: The interlacing or twisting of adjoining threads always takes place during the outward progress of the carriage, and it is my object to break those twists before they are wound upon the spindle during the return of the carriage. To this end the arbor Q of

the jack, rotating in the sense of the arrow, winds up the chain S in such a way as to stretch it, as indicated in the drawing in dot-and-dash lines at S′. As the rotation continues the wheel E is in its turn rotated, carrying with it the whole system of hooked needles, which is thus slowly dropped in between the spaces occupied by the threads. The interlaced or double-twisted thread is thus seized by one of the hooks, and it is slightly depressed, according to line *a b c;* but at this moment the carriage is about to effect its return movement, and the arbor Q, then moving in an opposite direction, will pay out the chain S, and the arbor A, being no longer withheld, will, actuated by the spring H and the weight M, rotate in an opposite direction and quickly throw the hook-needles up into their original position. During the rising of the hooked needles the double thread or twist is lifted up according to line *a d c*, and the tension thus produced is sufficiently strong to break the thread at its weakest point—that is to say, at *c*, next to the drawing-rolls; but inasmuch as the thus broken thread is no longer under tension, it is thrown up above the spindles, and no longer obeys the movement of the faller, and instead of being wound up helically it will be coiled upon one end of the spindle in the form of a ring, which the operator can easily take hold of in order to break it off, and to connect the sound end with a single sound thread from the drawing-roll. These are the arrangements which I have found to answer the purpose of my invention well. It will be understood, however, that many other arrangements can and must be devised with any change in the position which may be given to the needle-carrier, or according to the manner in which the reciprocating movement is imparted to it, or to the mode of transmission which may be employed therefor. The first arrangement shown and described may also be applied to the carriage with slight modification.

Having thus described my said invention, and the manner in which the same is or may be carried into effect, what I claim, and desire to secure by Letters Patent, is—

1. The combination, with spinning-jacks of otherwise ordinary or suitable construction, and whether applied to the carriage or any stationary portion of the same, of a bar extending the whole length of the jack, and carrying hook-needles at distances apart to correspond with the intervals of threads preceding from drawing-rolls, such bar being operated substantially as herein shown and described, so that the said needles shall engage in and cause the breakage of any interlaced threads or double twists, substantially as set forth.

2. The hook-needles shaped or formed substantially as herein shown and described, so that the same shall engage with the interlaced or twisted threads or yarns in their descending movement, substantially as herein shown and set forth.

3. The combination, with the double-twist-breaking needles, of mechanism to actuate the same, substantially as shown and described, so as to impart to the same a reciprocating movement, whether the same be oscillatory or other, substantially as described.

In testimony whereof I have signed my name to this specification before two subscribing witnesses.

JULES MARTIN.

Witnesses:
ARMENGAUD, Jeune,
ROBT. M. HOOPER.