July 31, 1945. J. FLAWS, JR 2,380,742

LAMP MAKING APPARATUS

Filed Jan. 14, 1942 6 Sheets-Sheet 1

Fig. 1.

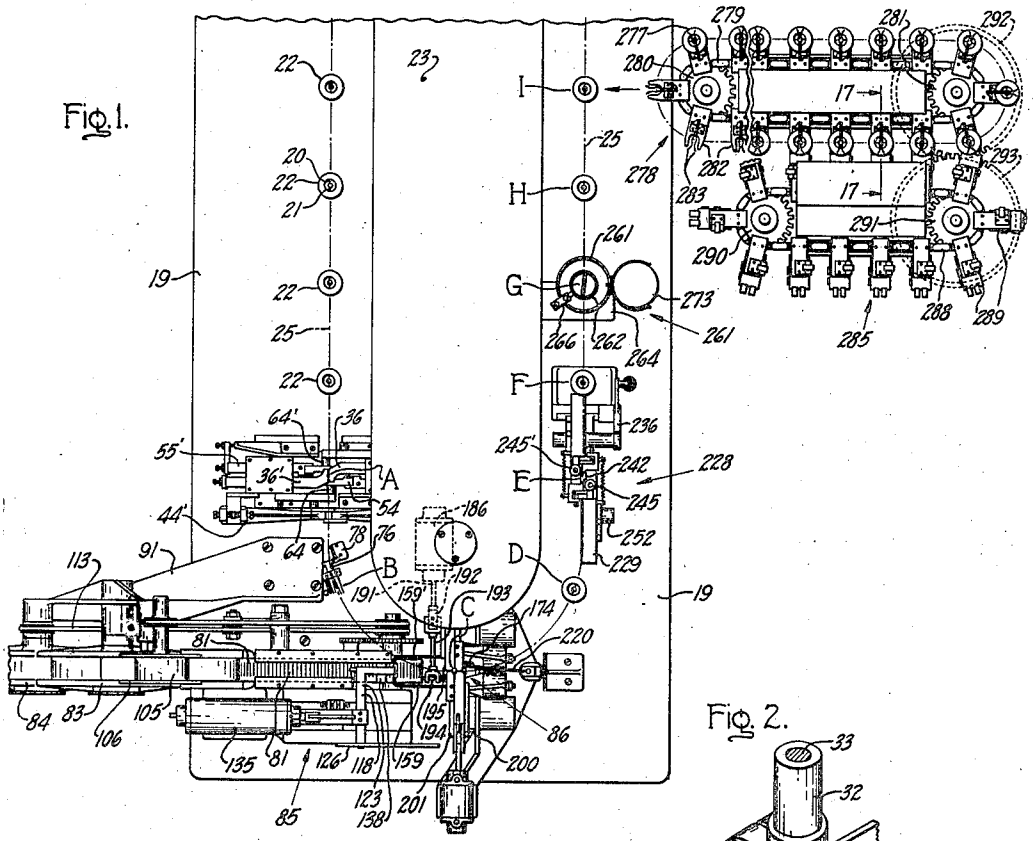

Fig. 2.

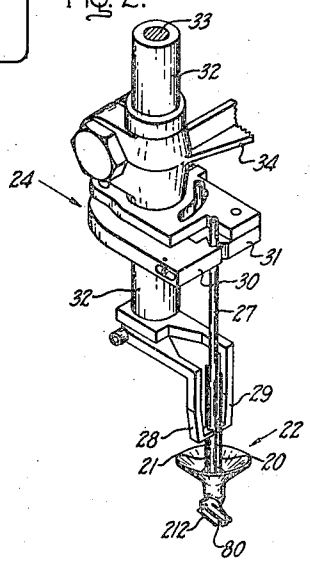

Fig. 3.

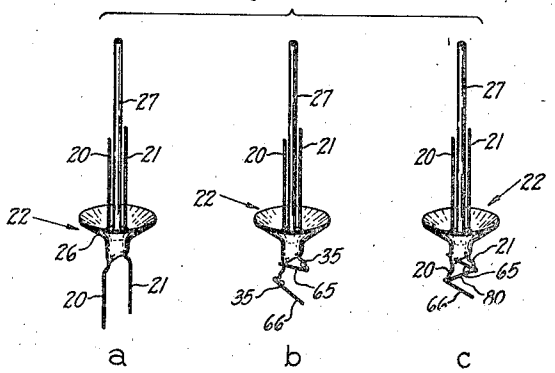

Inventor:
John Flaws Jr.,
by John H. Anderson
His Attorney.

July 31, 1945. J. FLAWS, JR 2,380,742

LAMP MAKING APPARATUS

Filed Jan. 14, 1942 6 Sheets-Sheet 2

Fig. 4.

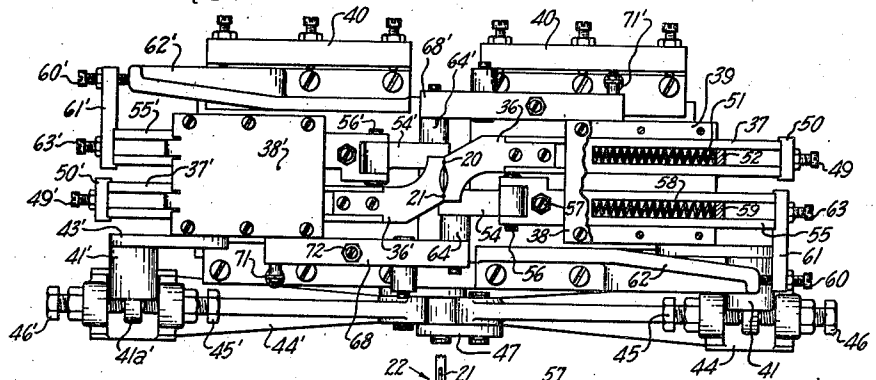

Fig. 5.

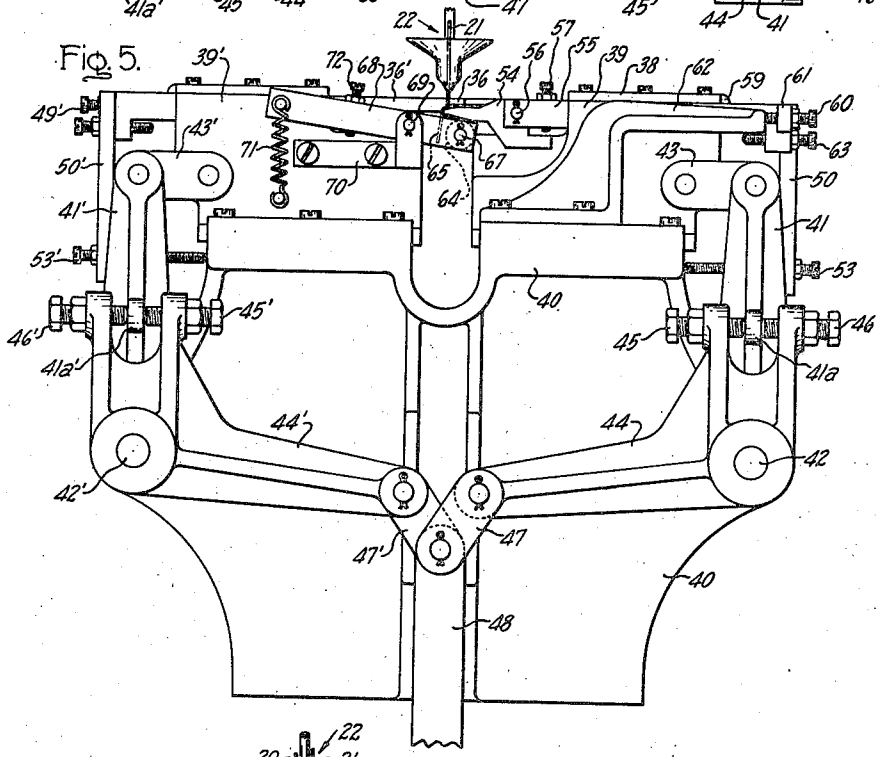

Fig. 6.

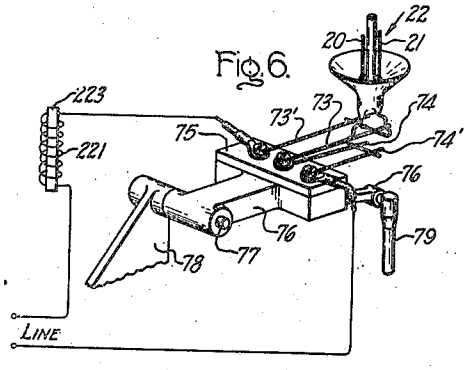

Inventor:
John Flaws Jr.,
by John H. Anderson
His Attorney.

July 31, 1945. J. FLAWS, JR 2,380,742

LAMP MAKING APPARATUS

Filed Jan. 14, 1942 6 Sheets-Sheet 3

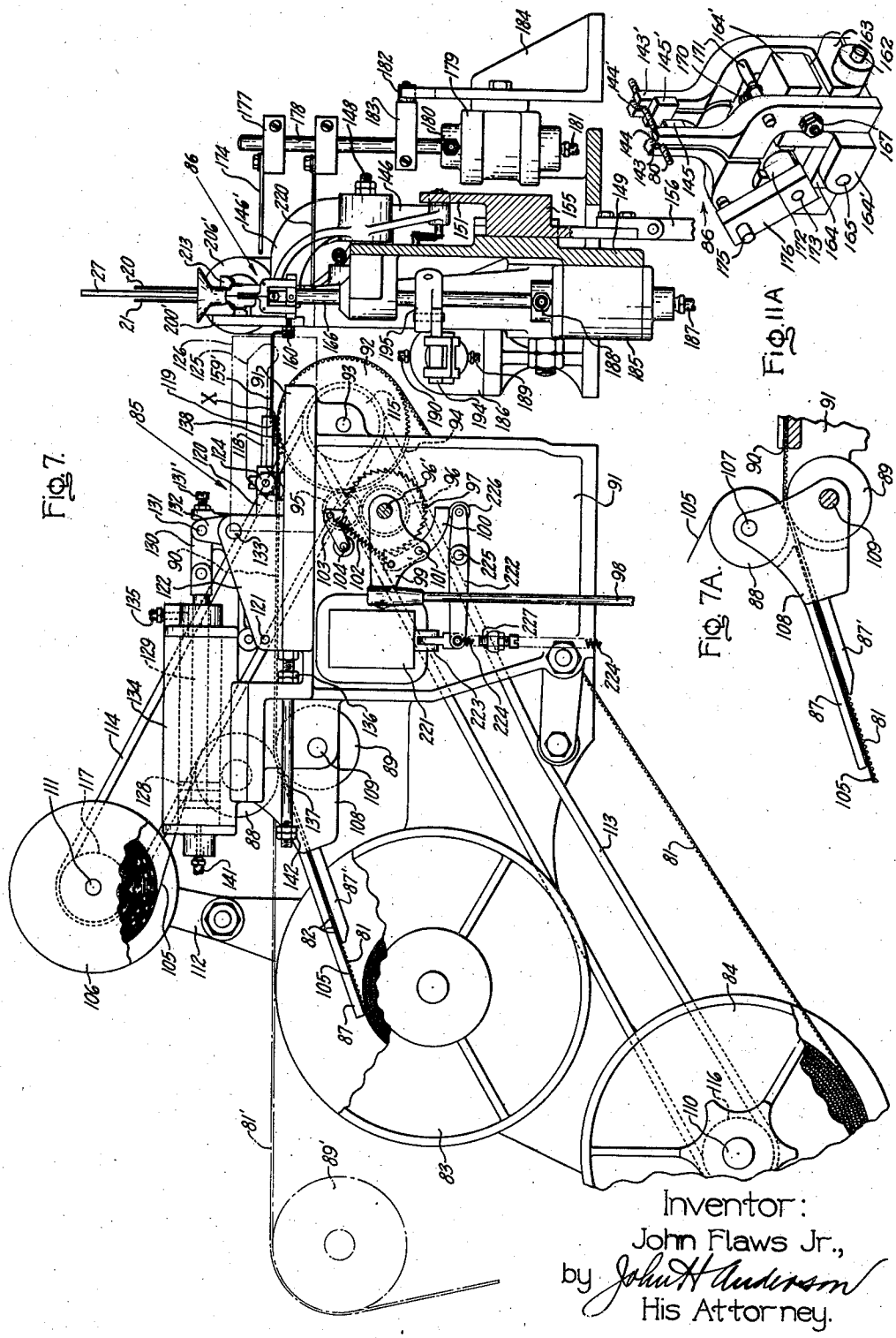

Fig. 7.

Fig. 7A.

Fig. 11A

Inventor:
John Flaws Jr.,
by John H. Anderson
His Attorney.

July 31, 1945. J. FLAWS, JR 2,380,742

LAMP MAKING APPARATUS

Filed Jan. 14, 1942 6 Sheets-Sheet 4

Fig. 15.

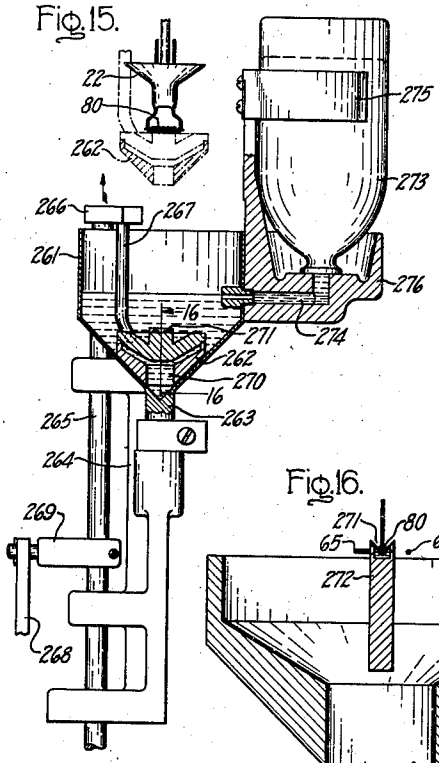

Fig. 17.

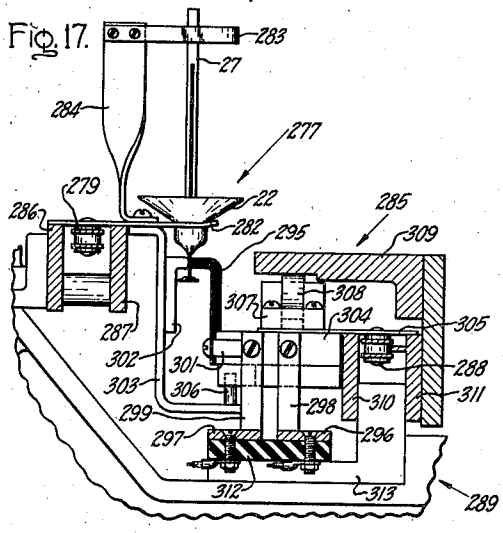

Fig. 16.

Fig. 18.

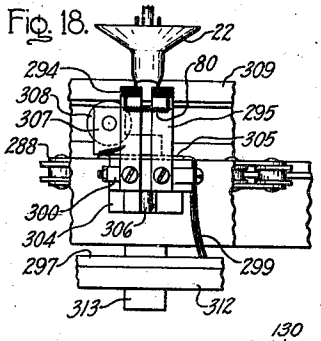

Fig. 8.

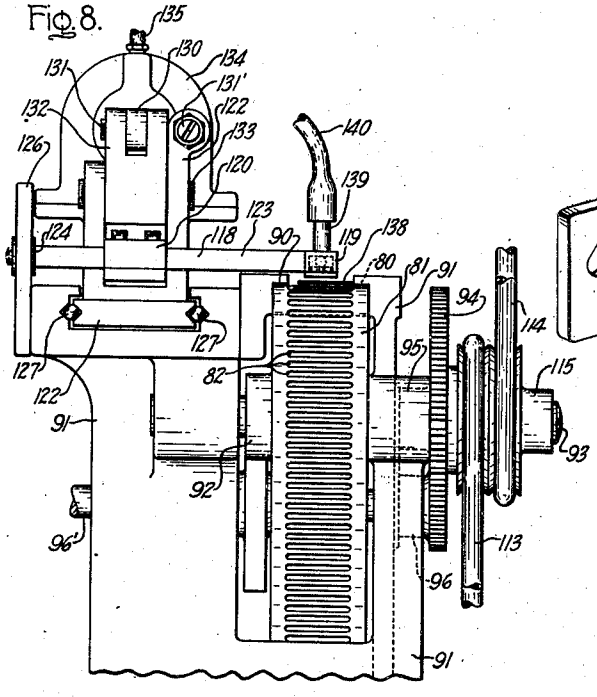

Fig. 8A.

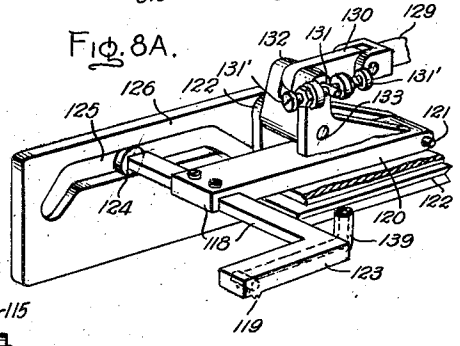

Inventor:
John Flaws Jr.,
by John H Anderson
His Attorney.

July 31, 1945. J. FLAWS, JR 2,380,742

LAMP MAKING APPARATUS

Filed Jan. 14, 1942 6 Sheets-Sheet 5

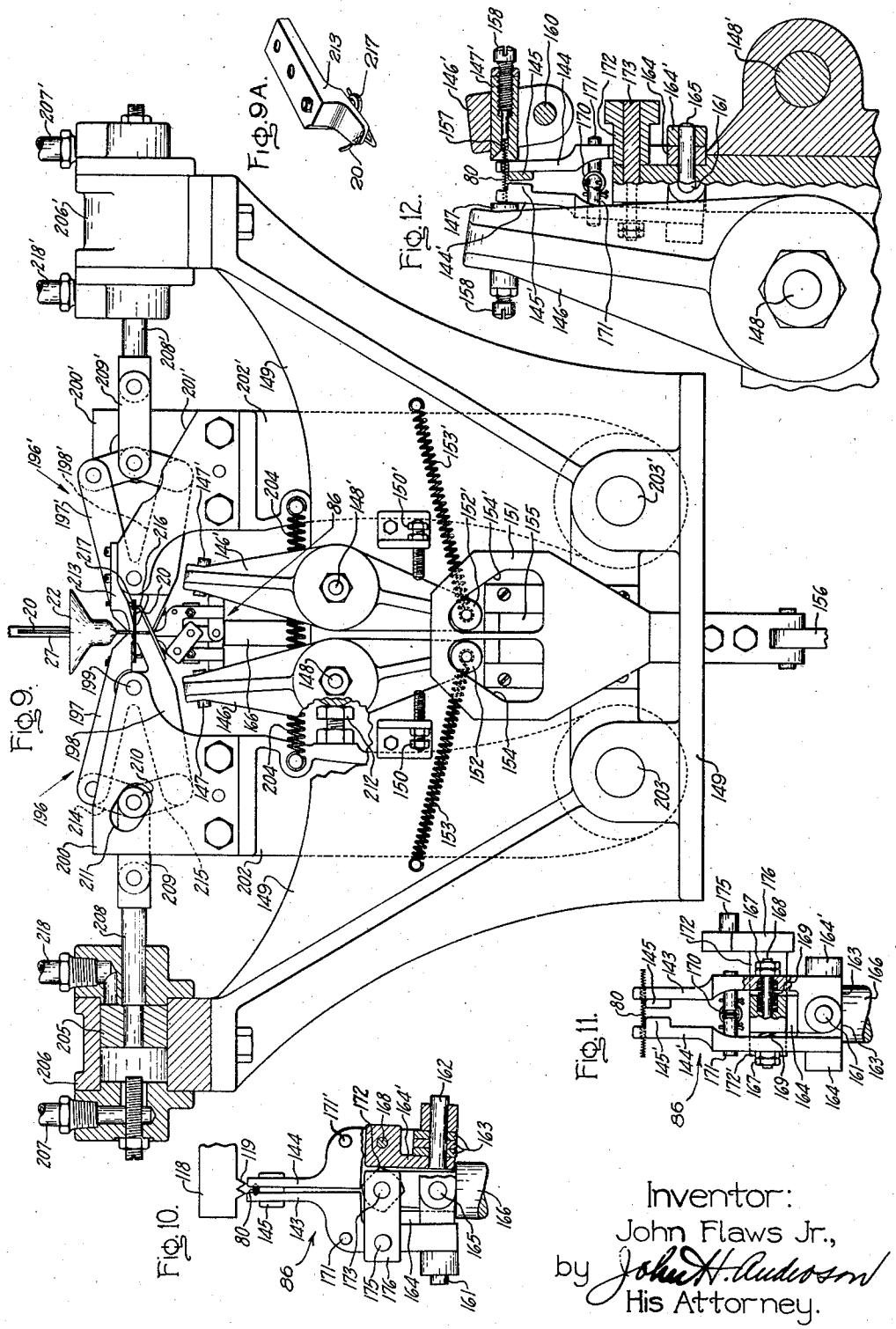

Fig. 9.

Fig. 9A.

Fig. 12.

Fig. 11.

Fig. 10.

Inventor:
John Flaws Jr.,
by John H. Audosson
His Attorney.

July 31, 1945. J. FLAWS, JR 2,380,742

LAMP MAKING APPARATUS

Filed Jan. 14, 1942 6 Sheets-Sheet 6

Fig. 13.

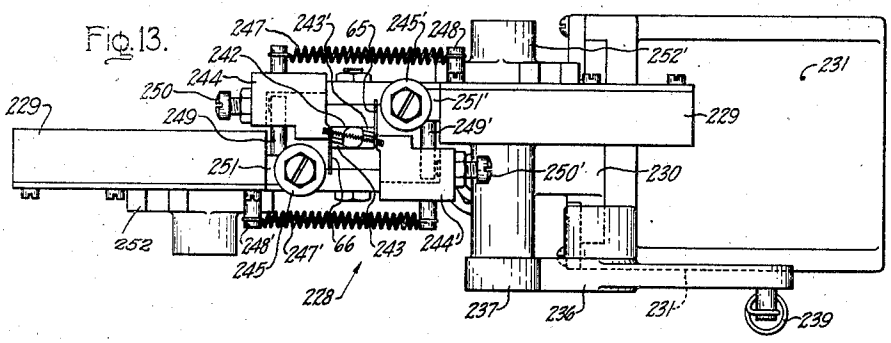

Fig. 14.

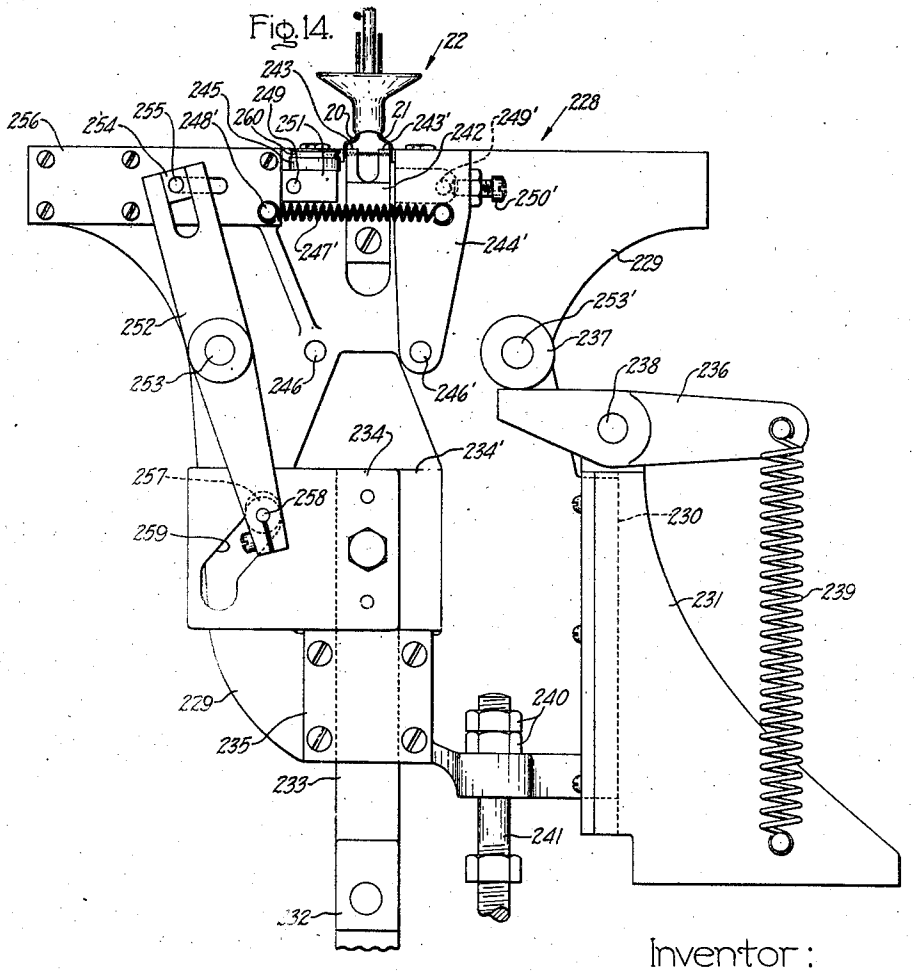

Inventor:
John Flaws Jr.,
by John H. Anderson
His Attorney.

Patented July 31, 1945 2,380,742

UNITED STATES PATENT OFFICE

2,380,742

LAMP MAKING APPARATUS

John Flaws, Jr., East Cleveland, Ohio, assignor to General Electric Company, a corporation of New York

Application January 14, 1942, Serial No. 426,766

20 Claims. (Cl. 29—25.15)

My invention relates to apparatus for making an electrode assembly or mount for fluorescent lamps or other discharge lamps and similarly constructed electric devices. Still more particularly my invention relates to apparatus for automatically mounting a filamentary wire cathode on the leads of a stem of a discharge lamp and to apparatus for constructing an anode on said stem at a predetermined relation to the cathode. Such cathodes may comprise a single coiled filament or a coiled-coil filament corresponding to the filaments of incandescent lamps and the apparatus comprising the present invention correspondingly relates in part to apparatus for mounting both cathodes and filaments.

One object of my invention is to provide apparatus for mounting a cathode of a discharge lamp or the filament of an incandescent lamp on the leads of a stem or the like. The apparatus comprises a novel mechanism for carrying the filament or cathode between the ends of the lead wires and inserting the ends of the filament into hooks on said leads.

Another object of my invention is to provide apparatus for bending hooks and otherwise shaping intermediate portions of the leads in preparation to mounting a cathode or filament thereon. Such apparatus forms two reverse bends in said leads very close to each other so that hooks are formed therein, and during said operation holds said leads firmly above the stem so that said stem is not broken. The apparatus carries the cathode or filament between any longitudinal or lateral extending portions of said leads to proper mounting relation thereto.

Another object of my invention is to provide apparatus for reshaping the leads of a stem of a discharge device to provide for the attachment of the cathode thereto and then further reshaping said leads to form auxiliary anodes. Such apparatus provides for the accurate and economical manufacture of mounts or electrode structures for fluorescent and other discharge lamps. The apparatus is preferably used in combination with stem making apparatus, a carrier for automatically advancing the stem to a series of work stations at which the apparatus of my invention is located and apparatus operating in proper time relation with the movements of the carrier for actuating said apparatus. However, the apparatus can, if desired, be located at various positions on a table and the stem or the like can be brought to said positions manually. In either combination the cathode or filament can be fed into the apparatus either manually or automatically.

Another object of my invention is to provide apparatus for treating the cathode after the formation of the mount. Such apparatus provides means of applying a fluid to the cathode to coat said cathode with a material which can be formed into an electron emissive material after subsequent treatment, and the apparatus further includes means for heat treating said cathode by passing electric current therethrough for an interval. The above apparatus permits the fluid to be confined to a particular portion of the cathode more readily than by other means, and provides for the thorough mixing of the fluid and uniform distribution thereof through the coils of the cathode. The current passed through the cathode heats the coating thereon causing it to be dried and, in some instances, drives off the binder components of the fluid which have caused it to adhere to the cathode.

Other objects and advantages of my invention will appear from the following detailed description of a species of my invention and from the drawings.

In the drawings, Fig. 1 is a plan view of apparatus comprising my invention in combination with a carrier for advancing a stem to the various portions thereof at stations A to I inclusive and the means of supporting both said apparatus and the carrier; Fig. 2 is a perspective view of one head of the carrier with the completely formed mount in position therein; Fig. 3 is a group of three perspective views of the mount in various stages of manufacture; Figs. 4 and 5 are plan and side views of hook forming apparatus located at station A; Fig. 6 is a perspective view of the feeler apparatus at station B controlling the cathode feeding apparatus and the wiring diagram therefor; Fig. 7 is a side elevation of the cathode feeding and mounting apparatus at station C; Fig. 7A is a side elevation of the strip guiding means of the cathode feeding apparatus; Fig. 8 is an end view on a larger scale of a portion of said cathode feeding apparatus; Fig. 8A is a perspective view of the transfer arm and actuating cam and other associated mechanism of the cathode feeding apparatus; Fig. 9 is a side elevation of the cathode positioning, transferring and hook closing mechanisms comprising the mounting apparatus at station C; Fig. 9A is a perspective view of one of the fingers of the hook closing mechanism; Figs. 10 and 11 are side elevations at 90 degrees to each other and on a larger scale of the cathode transferring mechanism of said mounting apparatus, and Fig. 11A is a perspective view thereof; Fig. 12 is a side elevation partially in section of the cathode positioning and transferring mechanisms; Figs. 13 and 14 are plan and side views of the anode forming apparatus at station E; Fig. 15 is a side elevation partially in section of the cathode coating apparatus at station G; Fig. 16 is a vertical section through the dipper of said apparatus along line 16—16 of Fig. 15 on a still larger scale; Fig. 17 is a vertical section through portions of the discharge conveyor and the

cathode treating apparatus along line 17—17 of Fig. 1; and Fig. 18 is a side elevation of one head of the treating apparatus with an electrode assembly in operative relation thereto.

The species of my invention shown in Fig. 1 comprises a plurality of independent apparatus which are for the most part mounted on the table 19 and which mount a cathode and develop anodes on the leads 20 and 21 of a stem 22 advanced into operative relation thereto by the indexing movements of the carrier 23. The stem 22 is held in one of a plurality of heads 24 (Fig. 2) of the carrier 23 which is essentially that disclosed in detail in my prior Patent 1,907,532 of May 9, 1933, and which advances said stem 22 along a circuitous path 25 some distance above the table 19 to the stations at which the present apparatus is located. As disclosed in my said prior patent, the carrier 23 is preferably arranged so as to take the stems 22 directly from the stem making machine and, in this particular instance, also advances the stem 22 to and from apparatus (not shown) located along the path 25 before bringing it into operative relation to the apparatus of my present invention. The stem 22 at such times appears as at *a* in Fig. 3 and comprises an extremely short flare or stem tube 26, an exhaust tube 27 and the leads 20 and 21, which leads have mid-sections of a material of the same rate of expansion as the vitreous stem tube 26 and exhaust tube 27 and pass through the seal joining said stem tube 26 and said exhaust tube 27. An opening in the seal between the inner ends of the leads 20 and 21, which are bent so as to be spaced further from each other, provides a passage through the stem 22 from the exhaust tube 27.

As shown in Fig. 2, each head 24 of the carrier 23 engages and holds the stem 22 by two sets of jaws 28—29 and 30—31 which grip the exhaust tube 27 at two spaced points and which are (although not shown) supported and operated through the hollow shaft 32 and the shaft 33 therein. The bracket 34 grips the hollow shaft 32 and forms one of the links making up the endless belt structure of the carrier 23 which is indexed at regular intervals through the succession of stations A to I inclusive.

The first of these stations, station A in particular, is occupied by apparatus for bending the leads 20 and 21 to the form shown at *b* in Fig. 3 wherein laterally offset open hooks 35, into which the ends of filamentary cathode can be clamped, are formed in a mid-portion of said leads 20 and 21. This apparatus, as shown in detail in Figs. 4 and 5, comprises duplicate mechanism at each side of the path 25 of travel of the stem 22 and begins its cycle of operation by advancing the horizontally disposed jaws 36 and 36' into engagement with the leads 20 and 21 so that they are held securely in place. Jaw 36 is fastened to a slide 37 located below the plate 38 in ways in the carriage 39 and is carried into engagement with the leads 20 and 21 by the movements of the carriage 39 which is, in turn, located in ways in the standard 40 and which is actuated indirectly by cam actuated means (not shown), said means corresponding to that shown in my Patent 1,907,532. The carriage 39 is under the control of the arm 41 which is pivoted on the pin 42 carried by the standard 40 and which is connected to said carriage 39 by the link 43 and the lever 44 which is also pivoted on the pin 42 and which causes said arm 41 to operate as a unit therewith through the engagement of the screws 45 and 46 with a projecting ear 41*a* thereon. The lever 44 is connected to the cam-actuated means through the link 47 and the rod 48 and, being operated by a part of the main driving means of the machine, causes the hook-forming apparatus to be operated at the proper intervals with respect to the movements of the carrier 23 and stem 22. Certain parts shown on the left hand side of Fig. 4 and Fig. 5 and actuating jaw 36' correspond to those which are shown on the right hand side of said figures and which actuate jaw 36. For the sake of conciseness, those parts operating on jaw 36' are designated by the same number, plus a prime, as the corresponding parts associated with jaw 36.

At the time the jaw 36 is moved into engagement with the leads 20 and 21 of the stem 22, said jaw 36 and slide 37 are positioned by the engagement of the stop screw 49 (on the arm 50 extending from the end thereof) with the end of the carriage 39 as the expansion force of the spring 51 which is located in a well in said slide 37 and which butts against a downwardly extending tongue 52 of the plate 38 keeps the slide 37 in an advanced position in its ways. The jaws 36 and 36' are prevented from bending the leads 20 and 21 out of position by the stop screws 53 and 53' in the lower extremity of the arm 50 or 50' which engage the back portion of the standard 40 when the jaws 36 and 36' have gripped said leads 20 and 21 and are at their limit of motion. The motion of the carriage 39, however, does not stop at this time and slide 37 is moved back in its ways, causing the spring 51 to be compressed still further and the die 54 (which is mounted on slide 55) to be carried against lead 21.

The die or finger member 54 is pivoted on the pin 56 carried by the slide 55 and turns about said pin 56 in a clockwise direction (as seen in Fig. 5) as the lead 21 is bent up against the jaw 36' so that relatively no longitudinal strain is placed on said lead 21. At other times the die 54 is turned about the pin 56 by its own weight so that the back portion rests against the stop screw 57. The slide 55 is kept forward in its ways in the carriage 40 by the expansion force of the spring 58 which is located in a well in said slide 55 and butts against the downwardly extending tongue 59 of the plate 38 until it has completed its motion and the stop screw 60 on the arm 61 extending laterally of said slide 55 butts against the arm 62 extending from the standard 40. At other times the slide 55 retains a fixed position with relation to the carriage 39 because of the engagement of the stop screw 63 with the back portion thereof.

The reverse bend in lead 21 is produced by the movement in carriage 39' which corresponds to additional movement of the carriage 39, and which carries the roll 64 against the protruding end 65 of the lead 21 so that it is bent back along the lower surface of the die 54. The corresponding reverse bend produced by the movements of carriage 39 bends the end 66 of lead 20 and causes said leads 20 and 21 to appear as shown at *b* in Fig. 3, the said leads 20 and 21 both being similarly shaped but orientated with their hooks facing in opposite directions. The roll 64, as shown in Figs. 4 and 5, is mounted on the pin 67 on the extending end of the lever 68 and is moved directly by the carriage 39' as the lever 68 is pivotally mounted on the pin 69 carried by the bracket 70 on the side of said carriage 39'. The lever 68 is biased by the spring 71 and is positioned by the

stop screw 72 which engages the bracket 70 so that the roll 64 engages the lead 21 just below the end of the die 54 at the beginning of the bending operation. The completion of this bending operation finds all portions of the hook-forming apparatus at their limits of operation, and the operating rod 48 changing its direction of movement so as to separate said apparatus from the leads 20 and 21.

The stem 22 is now indexed from station A to station B, the next in order, which is, in this particular instance, occupied by feeler apparatus which determines whether a cathode will be fed to the stem 22 when it is located at station C, the next in order. This apparatus prevents the loss of a cathode when there is no stem 22 in a head 24 of the carrier 23 and when the stem 22 is defective; that is, without one or both leads 20 and 21. The apparatus comprises two pairs of resilient wires 73—73' and 74—74' which are moved up to the normal position of the ends 65 and 66 of the leads 20 and 21. The wires 73—73', 74—74' are mounted on a block 75 of insulating material attached to the arm 76 and are carried to position by a movement of the arm 76 which turns it about the pin 77 extending from a stationary part 78 of the apparatus and which is under the direction of rod 79. The bracket 78 is mounted on the table 19 (Fig. 1). Normally, each pair of wires 73—73' and 74—74' contact separate end portions 65 and 66 of the leads 20 and 21 respectively and an electrical circuit between wires 73—73' and 74—74' is completed, but if one end portion is missing or out of place the circuit is never completed. Wires 73 and 74 are connected together, whereas the wires 73' and 74' are connected to the cathode feeding apparatus at station C, and should the circuit be incomplete between either pair of said wires, said cathode feeding apparatus is suitably affected.

The succeeding indexing movement of the carrier 23 advances the stem 22 to station C where the stem 22 is provided with the cathode or filament 80, as shown at *c* in Fig. 3. The cathode 80 is fed automatically by one portion of the apparatus and is positioned with its ends within the open hooks 35 of the leads 20 and 21 and attached thereto by another portion of said apparatus. The feeding apparatus may be dispensed with, as the cathodes 80 can be placed in the mounting apparatus manually, but is preferably used in this combination in that higher speeds of operation are then permissible and the danger of injury and contamination of the cathode 80 are greatly lessened. The feeding apparatus shown is a modification of the lamp filament feeding apparatus disclosed in my application Serial No. 240,779, filed November 16, 1938, now Patent No. 2,280,573, and provides a flexible metal strip or belt 81 (Fig. 7) having a plurality of pockets 82 in which the cathodes 80 are held. The metal strip 81 provides a very convenient and satisfactory means of handling considerable members of cathodes 80 at one time in that it can be wound into a self contained roll and can be unwound so as to present the cathodes 80 when they are needed. In this instance the cathodes or filaments 80 are comprised of very fine tungsten wire in the form of a coiled-coil from end to end, but they may have a coiled-coil mid-portion with either straight or single-coiled end sections, or they may be still differently shaped. The said filaments are located completely within the pockets 82 in the metal strip 81 so as to be protected thereby. The course of movements of the feeding apparatus is such that the cathode 80 is presented at station X during the movement of the metal strip 81 from spool 83 to spool 84 and is carried from station X to the mounting apparatus located about station C by the transfer means 85 which is also a part of the feeding apparatus. The cathode 80 is received by the transfer mechanism 86 of the mounting apparatus which is located below the stem 22 at station C and is carried up into the hooks 35 and into mounting relation to said stem 22 by the movements of said transfer mechanism 86.

The cathode feeding apparatus which includes both the means of unwinding the strip 81 and the first transfer means 85 provides, as shown among Figs. 1, 7, 7A and 8, a spool 83 for holding the rolled strip 81; guide means including the top and bottom guide plates 87 and 87' respectively; the rolls 88 and 89 and the channel 90 in the standard 91; a feed roll 92 for advancing the strip 81; and the spool 84 for rolling up the strip 81 after the cathodes 80 are taken from it. The strip 81 is advanced intermittently so as to present a pocket 82 (Fig. 8) containing a cathode 80 at station X at the proper moment by rotation of the feed roll 92 which is fastened on the shaft 93 mounted in the standard 91 and which is actuated through the gears 94, 95 and 96, the shaft 96' and the ratchet wheel 97 (Fig. 7). During each cycle of operation of the apparatus, the rod 98 which is attached to the arm 99 pivoted on the end of shaft 96' is moved up and down by the main driving means (not shown) of the machine and the pawl 100 which is mounted on the stud 101 extending from arm 99 is caused to advance the ratchet wheel 97 one tooth, thereby moving another pocket 82 to station X. The pawl 100 is kept against the ratchet wheel 97 by the contraction of the spring 102 extending between a post in pawl 100 and a second pawl 103 which is pivoted on stud 104 and which prevents the ratchet wheel 97 from turning in a reverse direction. In this particular instance, a second sealing strip 105 is used to seal the cathodes 80 in the pockets 82 of the first strip 81 and is withdrawn from the spool 83 with said strip 81. The sealing strip 105 is separated from the metal strip 81 as the latter passes over roll 89 and passes around roll 88 to the spool 106 which winds up the excess. Roll 88 (Fig. 7A) is mounted on the pin 107 carried by the bracket 108 which forms the guide plates 87 and 87' and which is pivoted on the pin 109 supporting roll 89. The spools 84 and 106, which roll up the used strips 81 and 105 respectively, are mounted on the shafts 110 and 111 respectively which are held by the standard 91 and the arm 112 extending therefrom and are rotated by means of the belts 113 and 114 which engage the pulley 115 on shaft 93 and the pulleys 116 and 117 on said shafts 110 and 111 respectively.

The above described portion of the cathode feeding apparatus is preferred when the cathodes 80 are fed entirely automatically, but is preferably modified when said cathodes 80 are placed in the apparatus manually. In such instances, an operator is stationed beside a table (not shown) at substantially the same height as the horizontal portion of the metal strip 81' and places said cathodes 80 in the pockets thereof before they are advanced to station X. It is preferred that the strip 81' be endless and extend around the feed roll 92, the spool 84 and the idler sheave 89' in order to make the operation of the apparatus continuous, but it is possible to

use a relatively long length of strip 81' feeding from spool 83 to spool 84 if said strip 81' is rewound on spool 83 at intervals. The idler sheave 89' causes a greater length of the strip 81' to be accessible than in the entirely automatic apparatus.

The operation of carrying the cathode 80 from the pocket 82 of the strip 81 at station X, which is provided for by the transfer means 85, is performed by the various movements of the arm 118 which is lowered so that the suction nozzle 119 in the end thereof is directly over said cathode 80. The arm 118 (Figs. 1, 7 and 8) is comprised of two pieces, (as best seen in Fig. 8A), a straight piece 120 which is pivoted on the pin 121 and which is located in a central opening in the carriage 122 and a transversely extending L-shaped piece 123 which is attached to the end of part 120 and which has the suction nozzle 119 on one end and a roller 124 within the channel 125 of cam 126 (shown in dot-dash lines in Fig. 7) on the other end. The movement of arm 118 which carries it into operative relation to the cathode 80 is the result of a movement of the carriage 122 (Figs. 7 and 8) in the ways formed by ball bearings 127 and the standard 91. This movement carries the roller 124 into the declined end section of the channel 125 in cam 126. This movement is the final backward movement of the piston 128 which is connected to the carriage 122 through the rod 129, link 130, pin 131, arm 132 and pin 133 and is due to the flow of air into the cylinder 134 through a pipe connection 135, the air flow being under the control of a valve (not shown). The screw 131' (Figs. 7 and 8) which is supported by the carriage 122 and which engages an end of the pin 131 extending from arm 132 and a corresponding screw (not shown) on the opposite side of said pin 131 prevent any rotative motion of arm 132 about pin 133 but allow the relative position of the piston 128 and carriage 122 to be changed. The carriage 122 moves to the extent allowed by the nuts 136 on the rod 137 extending from the end thereof, which nuts 136 engage a portion of the standard 91. The suction lifting the cathode 80 into the nozzle 119 is prevented from disturbing the cathodes 80 in the succeeding pockets 82 of the strip 81 by the plate 138 which is attached to the adjacent edge of the standard 91 and is conducted to said nozzle 119 through passages in the end of the arm 118 which are connected to a source of vacuum through the pipe 139 and flexible hose 140. The suction continues during the following movements of the arm 118 which raise the cathode 80 above the strip 84 and then advance it to a position over the transfer mechanism 86 of the mounting apparatus which is then located at a lower position (see Figs. 10 and 12) than shown in Figs. 7 and 9. These latter movements of the arm 118 are caused by a manipulation of valves (not shown) which control the entrance and discharge of air from cylinder 134 and which are actuated by cams of the operating means (not shown) so that compressed air flows in pipe connection 141 (Fig. 7) and is discharged from pipe connection 135. At the limit of the transferring movement of arm 118 the roller 124 enters a second declined portion of the channel 125 in the cam 126 which causes the nozzle 119 to be lowered to a position directly over the transfer mechanism 86 (Figs. 7 and 10) of the mounting apparatus and the valve controlling the suction thereto is adjusted so that the cathode 80 is released and drops into said transfer mechanism 86. The nuts 142 on the rod 137 engage the extending end of the standard 91 when the nozzle 119 is properly positioned and stop further movement thereof. The operation of transferring the cathode 80 is complete with the disposition of the cathode 80 in the transfer mechanism 86, but the cycle of operation is not complete until the nozzle 119 is returned to its former position so as to prevent said apparatus from interfering with the operations of the mounting machine. This final action of the transfer means 85 is caused by an adjustment of the valves controlling the flow of air to the cylinder 134 which reverses the flow of air thereto so that the piston 128 and transfer nozzle 119 is moved back.

At the time the cathode 80 is released by the feeding apparatus, the transfer nozzle 119 thereof is directly over the transfer mechanism 86 as shown in Fig. 10 and said mechanism 86—which is both lowered and rotated approximately 100 degrees from its position in Fig. 7—is arranged so that the ends of said cathode 80 pass between jaws 143—144 and 143'—144' respectively (Figs. 10, 11A and 11) and the cathode comes to rest on the projecting portions 145 and 145' of jaws 144 and 144' respectively. Said jaws 143—144 and 143'—144' engage the cathode 80 at spaced intermediate points and remain in this position during the immediate interval in which said cathode 80 is positioned therein.

The present operation of the apparatus is the result of a closing movement of the fingers 146 and 146' which carries the ends of the inserts 147 and 147' against the ends of the cathode 80 and the jaws 143—144 and 143'—144' respectively. The fingers 146 and 146' are pivoted on the pins 148 and 148' which extend from the standard 149 and are moved from their rest position which is determined by the stop screws 150 and 150' on the brackets on the standard 149 by a downward movement of the cam 151 which engages the rollers 152 and 152' on the lower ends of said fingers 146 and 146'. The contraction of the springs 153 and 153' keeps the fingers 146 and 146' turned so that the rollers 152 and 152' are in engagement with the faces 154 and 154' of the cam 151 which is mounted on the slide 155 in the ways of standard 149 and which is operated through the rod 156 and the main driving means (not shown) of the machine. The funnel-like openings in the ends of the inserts 147 and 147' (Fig. 12) direct the ends of the cathode 80 into the deeper wells 157 therein which have a depth determined by the positions of the screws 158 whereby said cathode 80 is compressed to a definite length at the limits of movement of said fingers 146 and 146'. Slight variations in the cathode 80 can not, therefore, cause said cathode 80 to be mounted improperly or have any appreciable effect in the complete mount or electrode assembly.

The movement of the fingers 146 and 146' is also used, in this particular instance, to actuate secondary positioning fingers 159 and 159' (Figs. 1 and 7) which are mounted on the studs 160 extending therefrom and which are carried against the end of the cathode 80 within the next succeeding pocket 82 of the strip 81 of the feeding apparatus. This latter positioning operation prevents difficulties in transferring the cathode 80 to the transfer mechanism 86 and is not performed with the accuracy of the corresponding operation of the fingers 146 and 146'.

The final closing movements of the fingers

146 and 146' carry the inserts 147 and 147' into engagement with the jaws 143—144 and 143'—144' respectively and moves them nearer together, as shown in Fig. 12. This operation moves the jaws 143, 144, 143' and 144' into engagement with the portions of the cathode 80 which they must hold during the mounting operation and turns said jaws about the pins 161 and 162. Opposite jaws 143—144' and 144—143' of each pair have overlapping portions 163 (Figs. 10 and 11) pivoted on the pins 161 and 162 which are mounted on the yokes 164 and 164' which are, in turn, pivotally mounted on the pin 165 held by the upper end of the spindle 166. The yokes 164 and 164' engage said pin 165 through the arms thereof which are offset from each other, as shown in Fig. 12, and extend upward in back of portions of the jaws 143—144' and 144—143', as shown in Fig. 10. At the time the cathode 80 is fed into the transfer mechanism 86, the jaws 144 and and 143' (and correspondingly 143 or 144') are swung outward to the limit established by the nuts 167 on pin 168 carried by a portion of the yoke 164 by the expansion of the springs 169 which butt against the jaw and said portion of the yoke 164. A spring 170 extending between the pins 171 and 171', which are slidably mounted in openings in the jaws 143—144' and 144—143' respectively, tends to close said jaws to the limit permitted by the engagement of the yokes 164 and 164' with the cams 172 and 172' on the opposite ends of the second pin 173 carried by the spindle 166. At the time the cathode 80 is dropped into the mechanism, the cams 172 and 172' are turned so that the thicker curved portion is between the yokes 164 and 164', tipping them about the pin 165 and holding the jaws 143—144 and 143'—144' open.

After the cathode 80 is positioned and compressed and the jaws 143—144 and 143'—144' are moved closer together, said jaws are caused to grip said cathode 80. This latter operation is produced by an upward movement of the finger 174 (Fig. 7) which engages the post 175 of the arm 176 extending from cam 172 and turns said arm 176 so that the flat portions of the cams 172 and 172' are carried between the yokes 164 and 164'. The finger 174 is attached to a block 177 clamped onto the rod 178 which is held by the cylinder 179 and a piston (not shown) therein, and is actuated by the movement of the piston by the passage of compressed air to and from said cylinder 179 through the pipe connections 180 and 181 at the direction of a valve (not shown) actuated by the main driving means of the machine. The rod 178 and finger 174 are kept from turning by the roller 182 on the block 183 clamped to the lower portion of said rod 178 which roller 182 is located in a vertical slot in the upper portion of the bracket 184 supporting the cylinder 179.

When the cathode 80 is gripped by the jaws 143—144 and 143'—144', the positioning fingers 146 and 146' are moved back away from said jaws and the cooperating pairs thereof separate to the extent allowed by the nuts 167 on the pins 168, thereby placing said cathode 80 under tension. This operation may stretch the cathode 80 somewhat, since it pulls all cathodes 80 to a uniform length regardless of any slight variations therein and places a desired tension therein.

The transfer mechanism 86 is now raised and turned to carry the cathode 80 up and into mounting relation to the stem 22 by corresponding movements of the spindle 166 which is actuated by the entrance of compressed air into the cylinders 185 and 186 (Fig. 7). The spindle 166 is directly connected to the piston in cylinder 185 which is attached to the standard 149 and is caused to be raised to the position shown (Fig. 7), prior to being turned, by the adjustment of a valve (not shown), a part of the main driving means of the machine, which valve causes the air to enter and leave cylinder 185 through the pipe connections 187 and 188. The turning movement of the transfer mechanism 86 which follows carries the ends of the cathode 80 which extend beyond the outer faces of the jaws 143—144 and 143'—144' over the relatively long substantially horizontal ends 65 and 66 of the leads 20 and 21 and turns the cathode 80 approximately 100 degrees so that said ends are disposed within the open hooks 35 of said leads 20 and 21. This turning movement is caused by an adjustment to another valve (not shown), a part of the main driving means of the machine, which valve causes the air to enter and leave cylinder 186 through pipe connections 189 and 190, thereby changing the position of a piston (not shown) in said cylinder 186. The piston, in turn, is connected through rod 191 (Fig. 1), universal joint 192, link 193 and bolt 194 to the arm 195 on the spindle 166.

The next operation of the mounting apparatus 86 at station C is the clamping of the open hooks 35 onto the ends of the cathode 80 and the bending of the free end of the leads 20 and 21 to a horizontal position. The apparatus performing these operations consists of cooperating duplicate mechanisms 196 and 196' (Fig. 9) at opposite sides of the stem 22 and includes the clamping jaws 197—198 and 197'—198' which are at the start of a cycle of operations located in a retracted position so that they are spaced from the closed end of the hooks 35. The clamping jaws 197 and 198 of clamping mechanism 196 are pivotally mounted on the pin 199 held by the cam 200 and a plate (not shown in Fig. 9) corresponding to plate 201' of the opposite clamping mechanism 196' and are carried into operative relation to the hook 35 by movement of the arm 202 to which said cam 200 and plate 201 (Fig. 1) are attached. The arm 202 is pivoted on the pin 203 and, being biased by the spring 204, is caused to swing toward the stem 22 with the first entrance of compressed air behind the piston 205 in the cylinder 206 of the operating means of said mechanism, which compressed air is, as in the other instances, controlled by a valve (not shown) which is actuated by a part of the main driving means of the machine. The air is introduced into cylinder 206 through pipe connection 207 which is connected to the source of compressed air (and correspondingly into cylinder 206' through pipe connection 207') and, by moving piston 205, pushes the rod 208 and bar 209 so that the roller 210 is carried away from the end of the opening 211 in cam 200. The arm 202 is then free to move toward the stem 22 to the extent allowed by the stop screw 212 which engages a portion of the standard 149 and carries the jaws 197 and 198 which are still open into operative relation to the hooks 35. The corresponding movement of the rod 208', bar 209' and arm 202' carry the finger 213 (Figs. 9 and 9A) against the portion of the lead 20 adjacent the open hook 35 so that it can not be displaced by the subsequent operations of the apparatus. The continued movement of the bar 209 which is connected to the jaws 197 and 198 through the

links 214 and 215 carries the roller 210 further in the opening 211 in cam 200 and closes said jaws 197 and 198. This same operation also carries the finger 216 attached to the jaw 198 into engagement with the extending end of lead 20 bending it up against the head of the stop screw 217 mounted on the finger 213. The jaws 197' and 198' and other corresponding parts of mechanism 196' operate similarly. The apparatus is separated from the stem 22 and returned to its original position by the entrance of compressed air into the cylinders 206 and 206' through pipe connections 218 and 218' because of an adjustment of the control valve (not shown) of the operating means.

The jaws 143—144 and 143'—144' of the transfer mechanism 86 of the mounting apparatus are now opened to separate them from the cathode 80 by a downward movement of the rod 178 (Fig. 7) which causes the finger 220 to engage the pin 175 on arm 176 and turns said arm 176 and the cams 172 and 172'. The transfer mechanism 86 then moves down and turns back to its original position by a reversal of the compressed air flow into cylinders 185 and 186, completing its cycle of operation. At such times, the cathode 80 is securely attached to the leads 20 and 21 of the stem 22 as shown at c in Fig. 3 and is under slight tension, although it may have lengthened when the hooks 35 were closed on the coiled end-portions thereof. Very short end sections of the cathode 80 may extend beyond the closed hooks 35.

The cathode feeding and mounting apparatus 85 and 86 respectively are under the control of the feeler apparatus at station B in that said feeler apparatus prevents the feeding apparatus from advancing a cathode 80 if the stem 22 at station B is defective. This control prevents the metal strip 81 from being indexed in the cycle of operations which would ordinarily cause a cathode 80 to be mounted on the defective stem 22 when it is advanced to station C although all other parts of the feeding apparatus 85 and the mounting apparatus 86 continue to operate as described. In instances when a defective stem 22 is engaged by the feeler apparatus, the circuit through it is incomplete, as already described, and the solenoid 221 (Figs. 6 and 7) remains unenergized and inoperative so that the lever 222 (Fig. 7) which is connected to the armature 223 thereof is moved by the contraction force of the spring 224. This operation turns lever 222 about the pin 225 extending from the standard 91 and causes the roller 226 to engage and turn the pawl 100 so that it does not engage and turn the ratchet wheel 97 when the arm 99 is moved. In this manner, the feed roll 92 is prevented from turning for the immediate cycle of operation. At other times when the stem 22 engaged by the feeler apparatus is properly constructed, the armature 223 of the solenoid 221 lifts the end of the lever 222 from the stop screw 227 extending from the post on standard 91 to the position shown so that the apparatus operates as previously described.

The next indexing movement of the head 24 of the carrier advances the stem 22 to station D. This station is shown unoccupied but can be occupied, for instance, by test apparatus of the general type disclosed in Donovan Patent 2,053,137, which is assigned to the assignee of the present invention, so that any failure of the mounting apparatus at station C can be known immediately. The number of defectively manufactured stems can be kept to a minimum by the use of such apparatus.

The next station (E) into which the head 24 of the carrier and the stem 22 are indexed is occupied by the apparatus 228, shown in detail in Figs. 13 and 14, which bends substantially the entire end portions 65 and 66 of the leads 20 and 21 to positions parallel to but on opposite sides of the cathode 80 (Fig. 2). These end portions 65 and 66 of the leads 20 and 21 function as auxiliary anodes in the completed discharge device and are not engaged by the apparatus 228 until it is moved up from below the stem 22 to operative relation therewith by a corresponding movement of the bracket 229. All essential members of the apparatus 228 are mounted on the bracket 229 which extends from a portion 230 located within slide ways in the standard 231 and are positioned by a movement thereof which is under the control of the bar 232. The said standard 231 is mounted on the table 19.

At the beginning of the cycle of operation the downward pull of the bar 232 which is attached to the main driving means (not shown) of the machine holds the slide 233 down in its ways in the bracket 229 so that the plate cam 234 on the outer face of the slide 233 butts against the cover plate 235 over said ways and the lifting force of the lever 236 which engages the roller 237 carried by said bracket 229 is ineffective. The lever 236 is pivoted on the pin 238 extending from the standard 231 and is under the influence of the contraction force of spring 239. The apparatus is located in operative relation to the leads 20 and 21 and the stem 22 when the bar 232 has moved sufficiently to allow the lever 236 to slide the bracket 229 upward in its ways in standard 231 to the limit allowed by the nuts 240 on the stud 241 extending from the top surface of the table 19 at which time the die 242 which is attached to bracket 229 is located between the end portions 65 and 66 of the leads 20 and 21. The die 242 comprises two similar separated portions 243 and 243' which are located on opposite sides of the cathode 80 and does not disturb the position of the leads 20 and 21.

Further operations of the bending apparatus 228 are brought about by the additional upward movement of the slide 233 which, first, causes the jaws 244 and 244' to move into engagement with the portions 65 and 66 of the leads 20 and 21 adjacent to and comprising the hooks 35 and which, second, causes the rolls 245 and 245' to bend the extending portions back against the outer faces of the separated portions 243 and 243' of the die 242. The jaws 244 and 244' are pivotally mounted on pins 246 and 246' respectively held by the bracket 229 and are biased by the springs 247 and 247' which extend from posts 248 and 248' held by bracket 229 so as to be under the control of the movements of the studs 249 and 249' which are engaged through the screws 250 and 250' respectively. The rolls 245 and 245' and the studs 249 and 249' respectively are both mounted on slides 251 and 251' located within horizontal ways in the bracket 229 and are actuated by the movements of said slides 251 and 251' which are created by movements of levers 252 and 252' about the studs 253 and 253'. As shown in Fig. 14, the lever 252 engages a block 254 on a pin 255 extending through a cover plate 256 over the slide 251 and is actuated by the movement of the slide 233 as the roller 257 on the pin 258 in the lower end of the lever 252 is then carried into a different part of the slot 259 in the cam plate 234.

The lever 252' is similarly actuated by a corresponding cam plate 234' (only partially shown through the opening in bracket 229) which is attached to the opposite face of the slide 233. At the limit of movement of the jaws 244 and 244' one portion of the faces thereof are positioned adjacent the closed end of the hooks 35 so as to prevent them from twisting out of place and a second portion of said faces clamp adjacent parts of the main body of said leads 20 and 21 and the extending portions 65 and 66 thereof against the separated portions 243 and 243' of the die 242 so as to prevent them from moving out of place. The openings between the two portions of the faces of the jaws 244 and 244' prevent said jaws from disturbing the ends of the cathode 80 extending beyond the hooks 35. The movement of the rolls 245 and 245' carries the peripherally grooved portions thereof against the extending ends 65 and 66 of the leads 20 and 21 bending them back around the corner of the separate portions 243 and 243' of the die 242 to a position parallel to the cathode 80. The groove 260 in the roll 245 and the corresponding groove in roll 245' prevents the ends of the leads 20 and 21 from shifting vertically from the plane of the cathode 80 even though said rolls 245 and 245' only move to a position just beyond the corners of the die 242. The anode shaping apparatus 228 is separated from the now completely formed cathode-anode assembly or mount by a downward movement of the slide 233 which movement causes the apparatus to operate in the reverse order and finally carries the cam plate 234 against the cover plate 235 causing all of said apparatus to be lowered away from said assembly.

It is sometimes desirable to rearrange the apparatus at the various stations so that the end portions of the leads 20 and 21 are first bent upward as at station A and then, before the cathode or filament 80 is secured thereto, are again bent as at station E to form the auxiliary anodes. The above arrangement is preferred when the stem is advanced to the various independent apparatus manually and when the cathode or filament 80 is presented manually. The stem 22 is, in the above instances, supported with relation to the various independent apparatus by separate holders having a fixed relation to the apparatus.

An indexing movement of the carrier 23 now advances the stem 22 to station F which is an idle station in this particular instance. After a period of time the succeeding indexing movement of the carrier advances the stem 22 to station G, the next in order. At this station (G), the cathode 80 is coated with a fluid which after further treatment takes the desired electron emission characteristics. The coating material in this instance is a comparatively viscous fluid comprised of finely ground barium and strontium powders in suspension in a liquid cellulose which functions as a binding medium to hold said powders on said cathode 80 and is carried upward to the cathode 80 from the cup 261 (Fig. 15) holding the main supply by the corresponding movement of the dipper 262. The cup 261 is supported through the post 263 on its lower end which is held by the bracket 264 mounted on the top of the table 19 and remains stationary at all times whereas the dipper 262 is mounted on the vertically disposed shaft 265 through the arm 266 and rod 267 and is moved vertically, both to agitate the fluid in said cup 261 and to lift it up to the cathode 80. The actuating means for the dipper 262 comprises apparatus (not shown), a portion of the main operating means of the machine, and the rod 268 and arm 269 which move shaft 265 vertically in the bracket 264. As shown in Fig. 15 and on a larger scale in Fig. 16, the dipper 262 has an opening 270 in the bottom which allows the fluid to circulate freely through it during an interval during which it is agitated repeatedly up and down in the cup 261 and which allows the fluid to drain back into said cup 261 when it is raised into operative relation to the cathode 80. Both operations contribute to the thorough agitation of the fluid and the complete replacement of the fluid within the dipper 262 and the trough 271 in the top edge of the partition 272 within said dipper 262 which trough 271 is carried up about the mid-portion of the cathode 80 by the movements of said dipper 262. The trough 271 holds a sufficiently large quantity of the fluid to coat the cathode 80 although its ends are open and allow a good portion of the fluid to flow back into the dipper 262. The trough 271 is also proportioned so that the cathode 80 contacts the fluid which is drawn into the interstices of the cathode 80 by capillary attraction. The center portion of the partition 272 which forms the trough 271 has a length limiting the application of the fluid to the portion of the cathode 80 between the leads 20 and 21 and so prevents the fluid from collecting on said leads 20 and 21 and the immediate portions of said cathode 80. Various means are provided for controlling the thickness of the coating given the cathode 80; the most important are the size and shape of the trough 271, the period of time the cathode 80 is kept in said trough and the viscosity of the fluid. In certain instances a second and even a third coating may be placed on said cathode 80 at succeeding stations in a similar manner if desired. Provision is made in the bottle 273 and the connecting passage 274 for replenishing the fluid as rapidly as it is used. The spring clip 275 and the bracket 276 hold the bottle 273 in place.

The coating apparatus just described is not claimed specifically herein but is claimed in a divisional application, Serial No. 488,955 filed May 29, 1943, now Patent No. 2,363,055, issued November 21, 1944.

The stem 22 is taken from the carrier 23 following two successive indexing movements thereof which advance it first to station H and then to station I. At the latter station, a head 277 of the discharge conveyor 278 is carried over to a position below flange of the stem 22 by a movement of the entire conveyor 278 in the direction indicated and said stem 22 is released by the carrier 23 so that it drops onto said head 277 and is moved back with the return movement of said conveyor 278. The heads 277 of the conveyor 278 are located at regular intervals along an endless chain 279 which extends between the sprockets 280 and 281 at the opposite extremities of said conveyor 278. As shown in Figs. 1 and 17, the said heads 277 comprise holders 282 having a central opening in which the main body of the stem 22 is accommodated and spring clips 283 which engage and hold the upper end of the exhaust tube 27. Both portions of the head 277 move as a unit as the spring clips 283 are mounted on a bar 284 attached to the holder 282 which is, in turn, fastened to the chain 279. The conveyor 278 is actuated by means (not shown), a part of the main driving means, which means engages the sprockets 280 and 281 and causes said chain 279 and the heads 277 to be indexed

in a clockwise direction (Fig. 1) during the retracting motion of said conveyor 278. The indexing motion advances the stem 22 gradually along the entire length of the far side of the conveyor 278 during which the coating on the cathode 80 is allowed to dry and finally carries said electrode assembly into operative relation to apparatus 285 which passes electric energy through said cathode 80 causing said coating to dry more rapidly and to be conditioned. The conveyor 278 is comparatively long (several times longer than shown) and the coating on the cathode 80 may have dried sufficiently so that this latter apparatus may be dispensed with in certain instances. In the course of the movement, the holders 282 slide along the top edges of bars (like those shown at 286 and 287) which are located on opposite sides of both straight portions of the conveyor chain 279 and which keep said holders 282 and the mount or electrode assembly to a definite path of movement.

The cathode treating apparatus 285 as shown in Figs. 1, 17 and 18 comprises an endless chain 288 having heads 289 at intervals corresponding to those at which the heads 277 on the conveyor 278 are located and two sprockets 290 and 291 at the opposite extremities which cause the chain 288 and a number of said heads 289 to lie directly opposite a portion of said conveyor 278. The sprockets 290 and 291 are mounted on a portion (not shown) of the conveyor 278 so as to move back and forth therewith and are indexed in the same manner as said conveyor 278 by the intermeshing gears 292 and 293 on the shafts holding sprockets 281 and 291 respectively so that the heads 289 of the treating apparatus 285 are caused to engage and travel with the heads 277 of said conveyor 278. As the conveyor heads 277 pass from the sprocket 281 to the straight path of movement, two spring fingers 294 and 295 (Figs. 17 and 18) of a head 289 of the treating apparatus 285 contact the leads 20 and 21 making the necessary electrical connections thereto and the electrical energy conducted to said spring fingers 294 and 295 from the stationary bus bars 296 and 297 through the brushes 298 and 299 and the metal bands 300 and 301 respectively causes the cathode 80 to increase in temperature. A block 302 of heat resisting insulating-material attached to the metal arm 303 extending from the holder 282 keeps the mount or electrode assembly from being broken or swung out of position. An insulating block 304 mounted on a plate 305 which is attached directly to the chain 288 provides the means of supporting the spring fingers 294 and 295 and the brushes 298 and 299 and provides an opening into which the pin 306 on an arm 303 passes as the heads 277 and 289 are brought into alignment with each other so as to keep them in proper registration with each other. Other parts of the conveyor head 289 comprises the bracket 307 and the roller 308, the latter of which bears against the plate 309 over the path of movement of the heads 289 and keeps said heads 289 down in position regardless of the upward pressure of the brushes 298 and 299. Other parts of the treating apparatus 285 comprise the bars 310 and 311 which are located along the parallel portions of the chain 288 and which provide a rest along which the plates 305 slide. The apparatus 289 further comprises the insulating block 312 and arm 313 which hold the bus bars 296 and 297 in place. The interval of treatment by the apparatus 285 is relatively short and the heads 289 soon move away from the mount or electrode assembly allowing it to travel on with the conveyor 278 to a portion between the apparatus 285 and table 19, not shown, opposite which an operator is stationed who removes and inspects the now complete mount.

What I claim as new and desire to secure by Letters Patent of the United States is:

1. The method of forming a composite electrode for an electric discharge device which comprises sealing a pair of leading-in wires into a glass stem, forming the inner portions of said wires with opposed filamentary coil-engaging hooks at a point removed from the innermost end of the wire so as to provide a free inner extension, clamping a filamentary coil within said hooks, and shaping said free inner extension to provide a wire anode element for said filmentary coil extending closely adjacent thereto and in the general direction thereof.

2. The method of forming a composite electrode for an electric discharge device which comprises sealing a pair of leading-in wires into a glass stem, forming the inner portions of said wires with oppositely facing opposed filamentary coil-engaging hooks at points removed from the innermost ends of said wires so as to provide free inner extensions, clamping a filamentary coil within said hooks, and shaping said free inner extensions to provide a pair of wire anode elements for said filamentary coil disposed on opposite sides thereof and extending closely adjacent and in the general direction of said coil.

3. The method of forming a composite electrode for electric discharge devices which comprises sealing a pair of leading-in wires into a glass stem so that said wires extend in the same general direction, bending intermediate portions of said wires to form hooks which open in opposite directions so that the free end portions of said wires extend in opposite directions approximately normal to the plane passing through said leading-in wires, inserting the ends of a filamentary cathode coil in said hooks and clamping said hooks thereon, and then bending the said free ends of said wires so that they extend along opposite sides of said coil approximately in the same plane therewith.

4. The method of forming a composite electrode for electric discharge devices which comprises sealing a pair of leading-in wires into a glass stem so that said wires extend in the same general direction, bending intermediate portions of said wires to form hooks which open in opposite directions so that the free end portions of said wires extend in opposite directions approximately normal to the plane passing through said leading-in wires, placing a cathode coil in the space between said free wire end portions and then rotating said coil so that its ends enter said hooks, clamping said hooks on said coil ends, and then bending the said free ends of said wires so that they extend along opposite sides of said coil approximately in the same plane therewith.

5. Apparatus for mounting a filament on end portions of spaced leads extending from a stem, comprising means for supporting said stem, filament transfer mechanism in alignment with said stem holder adapted to grip a filament with its ends projecting outward therefrom out of alignment with the said end portions of the leads, and means for actuating said transfer mechanism to first carry said filament to a position adjacent to and between said lead portions and to then bodily rotate said filament about a point intermediate its ends to carry its end portions

into mounting relation to said portions of the leads.

6. In a filament mounting machine, means for supporting a stem having a pair of axially extending leads provided with open hooks facing in opposite directions laterally of said stem, filament transfer mechanism in axial alignment with said stem but spaced therefrom and arranged to hold a filament with its ends out of alignment with the hooks in said leads, and means for actuating said transfer mechanism to first carry said ends of said filament into the transverse plane of said hooks and then rotate said filament to carry the said ends into the open hooks.

7. Apparatus for mounting a filament on end portions of spaced leads extending from a stem, comprising means for supporting said stem, filament transfer mechanism in alignment with said stem holder comprising two spaced pairs of jaws adapted to grip a linear coiled filament with its ends projecting outward therefrom out of alignment with the end portions of the leads, means for spreading said pairs of jaws apart to stretch the portion of the filament held therebetween, means for actuating said transfer mechanism to first carry said filament into the transverse plane of said end portions of said leads and then to rotate said filament about a point intermediate its ends to carry said ends into mounting relation to said end portions of said leads and apparatus for securing the ends of the filament to said leads so that it is mounted in a stretched condition.

8. Apparatus for mounting a filament on end portions of spaced leads extending from a stem, comprising means for supporting said stem, filament transfer mechanism in alignment with said stem holder adapted to grip a filament with its ends projecting outward therefrom out of alignment with the said end portions of the leads, apparatus for automatically presenting a filament at a station adjacent said transfer mechanism, means for carrying the filament from said station to the transfer mechanism, and means for actuating said transfer mechanism to first carry said filament to a position adjacent to and between said lead portions and to then bodily rotate said filament about a point intermediate its ends to carry its end portions into mounting relation to said portions of the leads.

9. A machine for making mounts for electric lamps comprising the combination of a plurality of heads each adapted to support a stem having a pair of spaced leads extending therefrom in the same general direction, a carrier supporting said heads and arranged to index the heads into a plurality of stations, mechanism located adjacent the path of travel of said heads for bending said leads laterally outward at points a substantial distance from their free ends, mechanism adjacent the path of travel of said heads for carrying a filament to a position between the said leads with the ends of the filament located at the bends in the leads, mechanism for securing the filament ends to the leads at the said bends therein, and mechanism also located adjacent the path of travel of said heads for further bending the leads, at points between their free ends and the points of attachment of the filament, to a position such that the extremities of the leads extend in the same general direction as the filament.

10. A machine for making mounts for electric lamps comprising the combination of a plurality of heads each adapted to support a stem having a pair of spaced leads extending therefrom in the same general direction, a carrier supporting said heads and arranged to index the heads into a plurality of stations, mechanism located adjacent the path of travel of said heads for bending said leads laterally outward and forming hook portions at points a substantial distance from their free ends, mechanism adjacent the path of travel of said heads for carrying a filament to a position between the said leads with the ends of the filament located in the hook portions, mechanism for clamping said hook portions of the leads on the filament ends, and mechanism also located adjacent the path of travel of said heads for further bending the leads, at points between their free ends and the points of attachment of the filament, to a position such that the extremities of the leads extends in the same general direction as the filament.

11. A machine for making mounts for electric lamps comprising the combination of a plurality of heads each adapted to support a stem having a pair of spaced leads extending therefrom in the same general direction, a carrier supporting said heads and arranged to index the heads into a plurality of stations, mechanism located adjacent the path of travel of said heads for bending said leads laterally outward and forming laterally offset hook portions at points a substantial distance from their free ends with the hooks and the ends of the leads facing and extending in opposite directions laterally of the plane passing through the unbent portions of the leads, mechanism adjacent the path of travel of said heads for carrying a filament to a position between the said leads with the ends of the filament located in the hook portions, mechanism for clamping said hook portions of the leads on the filament ends, and mechanism also located adjacent the path of travel of said heads for further bending the leads, at points between their free ends and the points of attachment of the filament, to a position such that the extremities of the leads extend on opposite side of and in the same general direction as the filament.

12. A machine for making mounts for electric lamps comprising the combination of a plurality of heads each adapted to support a stem having leads extending axially therefrom in a plane passing through the axis of the stem, a carrier supporting said heads and arranged to index the heads into a plurality of stations, mechanism located adjacent the path of travel of said heads for bending said leads to form hook portions facing in opposite directions laterally of the said plane of the leads, mechanism adjacent the path of travel of said heads for carrying a filament to a position between the said leads with the ends of the filament located in the hook portions, and mechanism for clamping said hook portions on the filament ends.

13. A machine for making mounts for electric lamps comprising the combination of a plurality of heads each adapted to support a stem having leads extending axially therefrom in a plane passing through the axis of the stem, a carrier supporting said heads and arranged to index the heads into a plurality of stations, mechanism located adjacent the path of travel of said heads for bending said leads to form hook portions facing in opposite directions laterally of the said plane of the leads, mechanism adjacent the path of travel of said heads for carrying a filament to a position between the said leads with the filament located in a plane passing through the hook

portions of the leads transversely of the axis of the said stem and with the filament at an angle to the line joining said hook portions, said last-named mechanism being arranged to further bodily rotate the filament in said last-named plane to carry the ends of the filament into the said hook portions, and mechanism for clamping said hook portions on the filament ends.

14. The combination set forth in claim 9 wherein the mechanism for further bending the leads comprises means to grip and firmly hold portions of the leads adjacent to the points of attachment of the filament while the leads are being bent, thereby preventing movement of the said portions of the leads which might injure the connections between the said leads and filament ends.

15. In apparatus for making mounts for electric lamps and similar devices, support means for a stem having a lead wire extending therefrom, and hook-forming mechanism comprising a pair of jaws arranged to grip an intermediate portion of said lead wire, a finger member at the opposite side of said jaws from the stem support means, means to move said finger member laterally of and through the position occupied by the end portion of the lead wire extending beyond said jaws to bend said wire laterally, and another forming member located in opposed relation to said finger member and adapted to bend said end portion of the wire back around said finger member to form a laterally offset hook opening in a direction normal to the unbent portion of the wire.

16. In apparatus for making mounts for electric lamps and similar devices, support means for a stem having a lead wire extending therefrom, and hook-forming mechanism comprising a pair of jaws arranged to grip an intermediate portion of said lead wire, a finger member at the opposite side of said jaws from the stem support means, means to move said finger member laterally of and through the position occupied by the end portion of the lead wire extending beyond said jaws to bend said wire laterally, and another forming member located in opposed relation to said finger member, and means for moving said forming member in a direction opposite to the movement of said finger member to bend the wire back around said finger member and form a laterally offset hook opening in a direction normal to the unbent portion of the wire.

17. In apparatus for making mounts for electric lamps and similar devices, support means for a stem having a lead wire extending therefrom, and hook-forming mechanism comprising a pair of jaws arranged to grip an intermediate portion of said lead wire, a finger member at the opposite side of said jaws from the stem support means, said finger member extending laterally of the line between said jaws and said stem support means and being mounted to pivot toward said jaws when shaping the hook to prevent longitudinal strain on the lead wire, means to move said finger member longitudinally to carry its end laterally of and through the position occupied by the end portion of the lead wire extending beyond said jaws to bend said wire laterally, and another forming member located in opposed relation to said finger member, and means for moving said forming member in a direction opposite to the movement of said finger member to bend the wire back around the end of said finger member and form a laterally offset hook opening in a direction normal to the unbent portion of the wire.

18. In apparatus for making mounts for electric lamps and similar devices, support means for a stem having a pair of lead wires extending therefrom in substantially parallel relationship, and hook-forming mechanism comprising jaw members arranged to grip an intermediate portion of each of said lead wires, and forming means at the opposite side of said jaw members from the stem support means for forming the end portions of said wires into laterally offset hooks opening in opposite directions normal to the plane passing through the unbent portions of the wires.

19. In apparatus for making mounts for electric lamps and similar devices, support means for a stem having a pair of lead wires extending therefrom in substantially parallel relationship, and hook-forming mechanism comprising jaw members arranged to grip an intermediate portion of each of said lead wires, a pair of finger members each located adjacent the position occupied by one of said lead wires at the opposite side of said jaw members from the stem support means, means to move each of said finger members laterally of and through the position occupied by the end portion of the adjacent lead wire extending beyond said jaw members to bend said wires laterally, and forming members each associated with and located in opposed relation to one of said finger members and adapted to bend the said end portion of the adjacent wire back around the said associated finger member to form a laterally offset hook opening in a direction normal to the unbent portion of the wire, the two finger members being on opposite sides of the plane passing through the unbent portions of the lead wires and the two forming members likewise being on opposite sides of said plane whereby to form said hooks so that they open in opposite directions normal to said plane.

20. In apparatus for making mounts for electric lamps and similar devices, support means for a stem having a pair of lead wires extending therefrom in substantially parallel relationship, and hook-forming mechanism comprising jaw members arranged to grip an intermediate portion of each of said lead wires, a pair of finger members each located adjacent the position occupied by one of said lead wires at the opposite side of said jaw members from the stem support means, means to move each of said finger members laterally of and through the position occupied by the end portion of the adjacent lead wire extending beyond said jaw members to bend said wires laterally, and forming members each associated with and located in opposed relation to one of said finger members, and means for moving said forming members in a direction opposite to the direction of movement of the associated finger member to bend the adjacent wire back around said finger member and form a laterally offset hook opening in a direction normal to the unbent portion of the wire, the two finger members being on opposite sides of the plane passing through the unbent portions of the lead wires and the two forming members likewise being on opposite sides of said plane whereby to form said hooks so that they open in opposite directions normal to said plane.

JOHN FLAWS, JR.