(12) INTERNATIONAL APPLICATION PUBLISHED UNDER THE PATENT COOPERATION TREATY (PCT)

(19) World Intellectual Property Organization
International Bureau

(43) International Publication Date
27 June 2019 (27.06.2019)

WIPO | PCT

(10) International Publication Number
WO 2019/126187 A1

(51) International Patent Classification:
E04G 25/04 (2006.01) *E04G 17/00* (2006.01)
E04G 11/50 (2006.01) *E04G 21/32* (2006.01)
E04G 9/04 (2006.01) *E04G 9/06* (2006.01)
E04G 17/14 (2006.01) *E04G 11/06* (2006.01)

(21) International Application Number:
PCT/US2018/066256

(22) International Filing Date:
18 December 2018 (18.12.2018)

(25) Filing Language: English

(26) Publication Language: English

(30) Priority Data:

15/845,962	18 December 2017 (18.12.2017)	US
15/910,698	02 March 2018 (02.03.2018)	US
15/971,620	04 May 2018 (04.05.2018)	US
16/222,825	17 December 2018 (17.12.2018)	US

(71) Applicant: **APACHE INDUSTRIAL SERVICES, INC.** [US/US]; 250 Assay Street, Suite 500, Houston, Texas 77044 (US).

(72) Inventor: **CHEVIS, Kenneth M.**; c/o Apache Industrial Services, Inc., 250 Assay Street, Suite 500, Houston, Texas 77044 (US).

(74) Agent: **PRAMUDJI, Ari**; Pramudji Law Group PLLC, 7880 San Felipe, Suite 115, Houston, Texas 77063 (US).

(81) Designated States *(unless otherwise indicated, for every kind of national protection available)*: AE, AG, AL, AM, AO, AT, AU, AZ, BA, BB, BG, BH, BN, BR, BW, BY, BZ, CA, CH, CL, CN, CO, CR, CU, CZ, DE, DJ, DK, DM, DO, DZ, EC, EE, EG, ES, FI, GB, GD, GE, GH, GM, GT, HN, HR, HU, ID, IL, IN, IR, IS, JO, JP, KE, KG, KH, KN, KP, KR, KW, KZ, LA, LC, LK, LR, LS, LU, LY, MA, MD, ME, MG, MK, MN, MW, MX, MY, MZ, NA, NG, NI, NO, NZ, OM, PA, PE, PG, PH, PL, PT, QA, RO, RS, RU, RW, SA, SC, SD, SE, SG, SK, SL, SM, ST, SV, SY, TH, TJ, TM, TN, TR, TT, TZ, UA, UG, US, UZ, VC, VN, ZA, ZM, ZW.

(54) Title: INTEGRATED CONSTRUCTION SYSTEM

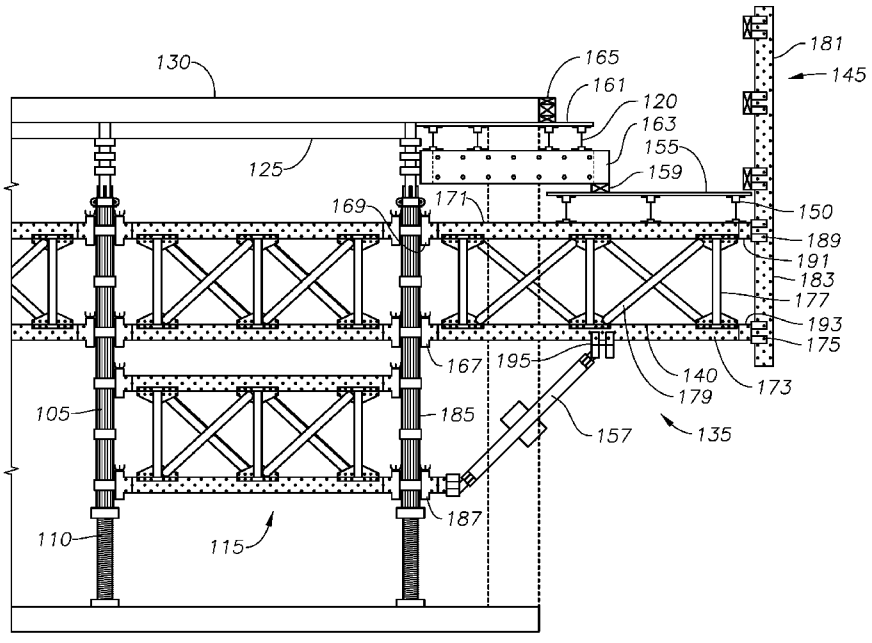

FIG. 1

(57) Abstract: Various implementations described herein are directed to an integrated construction system. In one implementation, the integrated construction system includes a first panel for a formwork configuration of the integrated construction system, a second panel for a shoring configuration of the integrated construction system, and a third panel for a worker access configuration of the integrated construction system. The first panel, the second panel and the third panel are the same panel type.

[Continued on next page]

WO 2019/126187 A1

(84) **Designated States** *(unless otherwise indicated, for every kind of regional protection available)*: ARIPO (BW, GH, GM, KE, LR, LS, MW, MZ, NA, RW, SD, SL, ST, SZ, TZ, UG, ZM, ZW), Eurasian (AM, AZ, BY, KG, KZ, RU, TJ, TM), European (AL, AT, BE, BG, CH, CY, CZ, DE, DK, EE, ES, FI, FR, GB, GR, HR, HU, IE, IS, IT, LT, LU, LV, MC, MK, MT, NL, NO, PL, PT, RO, RS, SE, SI, SK, SM, TR), OAPI (BF, BJ, CF, CG, CI, CM, GA, GN, GQ, GW, KM, ML, MR, NE, SN, TD, TG).

Declarations under Rule 4.17:

— *as to applicant's entitlement to apply for and be granted a patent (Rule 4.17(ii))*

Published:

— *with international search report (Art. 21(3))*

INTEGRATED CONSTRUCTION SYSTEM

CROSS-REFERENCE TO RELATED APPLICATIONS

[0001] This application is a PCT filing of and claims priority to U.S. Patent Application No. 16/222,825, filed December 17, 2018, which is a continuation-in-part of U.S. Patent Application No. 15/971,620, filed May 4, 2018, which is a continuation-in-part of U.S. Patent Application No. 15/910,698, filed March 2, 2018, which is a continuation-in-part of U.S. Patent Application No. 15/845,962, filed December 18, 2017, all of which are incorporated herein by reference.

BACKGROUND

[0002] This section is intended to provide background information to facilitate a better understanding of various technologies described herein. As the section's title implies, this is a discussion of related art. That such art is related in no way implies that it is prior art. The related art may or may not be prior art. It should therefore be understood that the statements in this section are to be read in this light, and not as admissions of prior art.

[0003] There are two types of concrete construction that require some form of formwork: vertical formwork and shoring. Vertical formwork provides the ability to form structures that hold vertical loads. Shoring provides the ability to form structures that hold horizontal loads. Vertical structures like walls, columns and foundations require formwork, and horizontal structures like slabs, beams and girders require shoring to cast them into place as an elevated structural component. Examples where shoring provides horizontal concrete members include: slabs, horizontal concrete girders, cross-t's under highways, etc.

[0004] Many companies in existence today have developed specific independent formwork systems and independent shoring systems. They generally carry a sizable inventory of several different types that are both rented and sold to contractors who build concrete structures.

[0005] The applications of formwork and shoring are unlimited given the wide range of project types in both the industrial and commercial construction markets. From high-rise buildings, to the construction of an industrial facility, formwork and shoring are used to help contractors cast foundations, columns, walls, elevated slabs and elevated beams in an enormous variety of shapes and uses. Chances are that all of the buildings in which people live and work have some sort of poured in-place concrete that was casted using a formwork system.

[0006] Older generation systems required formwork and shoring providers to have significantly large inventories of parts in order to make up the variety of configurations necessary. Those systems consisted of endless amounts of components used by a building contractor. Along with the large amount of inventory items, the assembly efficiency for those systems was often on

the low side, as compared to systems in use today. Due to the large amount of pieces, it was common for many of these items to be lost during the construction process.

SUMMARY

[0007] Described herein are various implementations of a fitting ring of an integrated construction system. In one implementation, the fitting ring includes an inner portion configured to be coupled to a post. The fitting ring also includes an outer portion configured to be coupled to a ledger rail and configured to allow the post to handle a load from the ledger rail.

[0008] Described herein are various implementations of a modular header beam of an integrated construction system. In one implementation, the modular header beam includes a first end and a second end. The modular header beam is an extrusion configured to interchangeably support: shoring panels of a shoring assembly and decking panels of a decking assembly.

[0009] Described herein are various implementations of a perimeter safety deck assembly of an integrated construction system. The perimeter safety deck assembly includes a post. A first ledger is coupled to the post in a horizontal configuration. At least one second ledger is coupled to the first ledger and forms a vertical outer wall.

[0010] The perimeter safety deck assembly may include a bracing element coupled to the post and the first ledger. The bracing element can be coupled to the post via a ledger clamp and the first ledger via a clip.

[0011] The vertical outer wall may include a plurality of second ledgers coupled together to form the vertical outer wall.

[0012] The first ledger may be coupled to the post via a ledger clamp.

[0013] The perimeter safety deck assembly may include a third ledger coupled to the post and the at least one second ledger. The first ledger and the third ledger may be part of a ledger assembly.

[0014] In one implementation, the ledger assembly may include at least one strut coupled to the first ledger and the third ledger.

[0015] In one implementation, the ledger assembly may include a plurality of struts coupled to the first ledger and the third ledger. The ledger assembly may include brace members coupled between adjacent struts of the plurality of struts.

[0016] In one implementation, the perimeter safety deck assembly may include a bracing element coupled to the post and the third ledger.

[0017] The bracing element may be coupled to the post via a ledger clamp.

[0018] The bracing element may be coupled to the third ledger via a clip.

[0019] In one implementation, a platform may be coupled to the first ledger via a plurality of joists. The platform may be configured to provide worker access, or provide support for shoring or both. The platform may support a modular header beam, the modular header beam may be coupled to the post and a second platform, and the second platform may be configured to provide shoring for a concrete slab.

[0020] Described herein are various implementations of a bearing plate of an integrated construction system. The bearing plate includes a surface. The surface has an outer boundary defining an outer edge of the bearing plate. The surface has an inner boundary within the bearing plate that defines an area shaped to interchangeably accommodate a plurality of components of the integrated construction system.

[0021] Described herein are various implementations of a bearing plate of an integrated construction system. The bearing plate includes a surface. The surface has an outer boundary defining an outer edge of the bearing plate. The surface has a plurality of inner boundaries within the bearing plate, each of the inner boundaries defining an area shaped to interchangeably accommodate a plurality of components of the integrated construction system.

[0022] Also described herein are various implementations of an integrated construction system. In one implementation, the integrated construction system includes a first panel for a formwork configuration of the integrated construction system, a second panel for a shoring configuration of the integrated construction system, and a third panel for a worker access configuration of the integrated construction system. The first panel, the second panel and the third panel are the same panel type.

[0023] In one implementation, the panel type may be a form panel. The form panel may be an aluminum form panel. In one implementation, the second panel may supported by a header beam in the shoring configuration. The header beam may be coupled to a plurality of posts. The header beam may be an aluminum header beam and the plurality of posts may be a plurality of aluminum posts. At least one bracing assembly may be coupled between the plurality of posts. The at least one bracing assembly may include a first modular ledger, a second modular ledger, and at least one ledger strut. The bracing assembly may include two ledger struts and ledger brace members.

[0024] In one implementation, the panel type may be a modular ledger. In the shoring configuration, the second panel may be part of a bracing assembly. The bracing assembly may

include: the second panel, a fourth panel comprising the same panel type, and at least one ledger strut. The bracing assembly may include two ledger struts and ledger brace members.

[0025] In the worker access configuration, the third panel and a fifth panel may be part of a second bracing assembly, the fifth panel being the same panel type. A sixth panel may be coupled to the second bracing assembly to form an outer wall of the worker access configuration, the sixth panel being the same panel type. A plurality of modular ledger panels may be coupled together and are coupled to the second bracing assembly to form an outer wall of the worker access configuration. The plurality of modular ledger panels may be coupled together using a ledger splice.

[0026] A plurality of joists may be coupled to a top surface of the second bracing assembly. The plurality of joists can support a platform that provides worker access.

[0027] Also described herein are various implementations of a method for providing an integrated construction system. A first panel for a formwork configuration of the integrated construction system is provided. A second panel for a shoring configuration of the integrated construction system is provided. A third panel for a worker access configuration of the integrated construction system is provided. The first panel, the second panel and the third panel are a same panel type.

[0028] Also described herein are various implementations of a modular ledger of an integrated construction system. In one implementation, the modular ledger includes a rail, having a first end and a second end. Each end of the rail is configured to be coupled to one or more posts and/or assemblies through a coupling component. The rail has a plurality of holes configured to couple to bracing components of the integrated construction system.

[0029] The rail may be hollow and constructed of aluminum.

[0030] The coupling component may be a ledger clamp, a ledger splice, a ledger guardrail fitting, or a ledger end fitting.

[0031] The plurality of holes can be a hole pattern formed longitudinally along each side of the rail.

[0032] In one implementation, the rail may be configured to form a wall of a safety deck.

[0033] In one implementation, the rail may be configured to form part of a rollback mechanism.

[0034] The rail can be configured to form part of a bracing assembly when coupled to the bracing components.

[0035] The rail can be configured as a load bearing member when coupled to posts of the integrated construction system.

[0036] Also described herein are various implementations of a bracing assembly of an integrated construction system. In one implementation, the bracing assembly includes a first rail configured to be coupled to one or more posts and/or assemblies through a first coupling component, a second rail configured to be coupled to the one or more posts and/or assemblies through a second coupling component, and a first ledger strut coupled to the first rail and the second rail.

[0037] In one implementation, the bracing assembly includes a second ledger strut coupled to the first rail and the second rail. In one implementation, the bracing assembly includes ledger brace members coupled between the first ledger strut and the second ledger strut. The first ledger strut, the second ledger strut, and the ledger brace members may be adjusted along the first rail and the second rail. A distance between the first rail and the second rail may be adjusted by adjusting a lateral position of at least one of the first ledger strut and the second ledger strut along the first rail and the second rail.

[0038] In one implementation, the first rail and the second rail may have a first hole pattern. The first ledger strut may have a second hole pattern. The first hole pattern and the second hole pattern may be used to couple the first rail to the second rail via the first ledger strut.

[0039] Also described herein are various implementations of an integrated construction system component. In one implementation, the integrated construction system component includes a ledger rail configured to be coupled to one or more posts and/or assemblies through a coupling component. The ledger rail is constructed of aluminum and configured to provide bracing for the integrated construction system and handle vertical loads while attached to other components of the integrated construction system.

[0040] Also described herein are various implementations of a modular post of an integrated construction system. In one implementation, the modular post includes a longitudinal extruded post having a first end and a second end. Each end of the longitudinal extruded post is configured to receive a post end component. The longitudinal extruded post includes a plurality of grooves cut into the longitudinal extruded post at predetermined locations along the post.

[0041] The longitudinal extruded post may be constructed of aluminum.

[0042] The modular post may include at least one post fitting mechanically fastened to the longitudinal extruded post. The at least one post fitting can be coupled to the post by sliding the at least one post fitting down the longitudinal extruded post and twisting the at least one post fitting

into place. The at least one post fitting can be twisted into place at one of the plurality of grooves. The at least one post fitting may be fastened to the longitudinal extruded post using a screw.

[0043] The longitudinal extruded post may include a plurality of ribs along the longitudinal extruded post. The plurality of grooves can be cut into the plurality of ribs.

[0044] The post end component may include a post end fitting. The post end fitting may be a permanent fitting.

[0045] The post end component may include screw leg components. The screw leg components can be used to vary a height of a shoring assembly of the integrated construction system. The height of the shoring assembly can be varied within an adjustment range.

[0046] The longitudinal extruded post can be coupled to a screw leg assembly. In one implementation, the screw leg assembly may remain attached to the longitudinal extruded post using screw leg clips of the screw leg assembly. In one implementation, the longitudinal post and the screw leg assembly can be configured to be moved from a first location to a second location without being disassembled.

[0047] The modular post can be configured to be coupled to a coupling component of the integrated construction system. In one implementation, the coupling component can be coupled to a bracing component. In one implementation, the coupling component can be coupled to a modular ledger panel. In one implementation, the coupling component can be coupled to a bracing element.

The above referenced summary section is provided to introduce a selection of concepts in a simplified form that are further described below in the detailed description section. Additional concepts and various other implementations are also described in the detailed description. The summary is not intended to identify key features or essential features of the claimed subject matter, nor is it intended to be used to limit the scope of the claimed subject matter, nor is it intended to limit the number of inventions described herein. Furthermore, the claimed subject matter is not limited to implementations that solve any or all disadvantages noted in any part of this disclosure.

BRIEF DESCRIPTION OF THE DRAWINGS

[0048] Implementations of various techniques will hereafter be described with reference to the accompanying drawings. It should be understood, however, that the accompanying drawings illustrate only the various implementations described herein and are not meant to limit the scope of various techniques described herein.

[0049] Figure 1 illustrates a shoring system using components of an integrated construction system in accordance with implementations of various techniques described herein.

[0050] Figure 2 illustrates various system component drawings for modular vertical posts and post components in accordance with implementations of various techniques described herein.

[0051] Figure 3 illustrates details of a post extrusion and a ledger fitting in accordance with implementations of various techniques described herein.

[0052] Figure 4 illustrates various views of a post end fitting in accordance with implementations of various techniques described herein.

[0053] Figure 5 illustrates various views of screw leg components in accordance with implementations of various techniques described herein.

[0054] Figure 6 illustrates various views of a multi-purpose bearing plate in accordance with implementations of various techniques described herein.

[0055] Figure 7 illustrates various views of a multi-purpose bearing plate in a slope bracket configuration in accordance with implementations of various techniques described herein.

[0056] Figure 8 illustrates various views of a post hinge attachment in accordance with implementations of various techniques described herein.

[0057] Figure 9 illustrates various views of a swivel caster shoe in accordance with implementations of various techniques described herein.

[0058] Figure 10 illustrates different standard post assembly applications using the multi-purpose bearing plate in accordance with implementations of various techniques described herein.

[0059] Figure 11 illustrates drophead components and a configuration showing a drophead coupled to a modular ledger beam in accordance with implementations of various techniques described herein.

[0060] Figure 12 illustrates various views of a heavy duty or mega-shore bearing plate in accordance with implementations of various techniques described herein.

[0061] Figure 13 illustrates various system component drawings for modular ledger panel components in accordance with implementations of various techniques described herein.

[0062] Figure 14 illustrates various modular ledger configuration examples in accordance with implementations of various techniques described herein.

[0063] Figure 15 illustrates a ledger clamp connection in accordance with implementations of various techniques described herein.

[0064] Figure 16 illustrates ledger rail fittings in accordance with implementations of various techniques described herein.

[0065] Figure 17 illustrates a ledger strut and bracing assembly range in accordance with implementations of various techniques described herein.

[0066] Figure 18 illustrates examples of modular header beams in accordance with implementations of various techniques described herein.

[0067] Figure 19 illustrates beam and joist components in accordance with implementations of various techniques described herein.

[0068] Figure 20 illustrates modular shoring using standard panel decking in accordance with implementations of various techniques described herein.

[0069] Figure 21 illustrates modular shoring using standard joist decking in accordance with implementations of various techniques described herein.

[0070] Figure 22 illustrates a modular shoring plan where standard aluminum panels and filler are used to provide shoring in accordance with implementations of various techniques described herein.

[0071] Figure 23 illustrates modular shoring sections and details in accordance with implementations of various techniques described herein.

[0072] Figure 24 illustrates various components of the integrated construction system being used together to form a tunnel form in accordance with implementations of various techniques described herein.

[0073] Figure 25 illustrates a rollback shearwall deck in accordance with implementations of various techniques described herein.

[0074] Figure 26 illustrates a plan view of the HD shoring application in accordance with implementations of various techniques described herein.

[0075] Figure 27 illustrates an elevational view of the HD shoring application in accordance with implementations of various techniques described herein.

[0076] Figure 28 illustrates a block diagram of a method of providing an integrated construction system in accordance with implementations of various techniques described herein.

[0077] Figure 29 illustrates a post in accordance with implementations of various techniques described herein.

[0078] Figure 30 illustrates a coupling of a joist to a modular header beam in accordance with implementations of various techniques described herein.

[0079] Figure 31 illustrates standard panel assembly plan views in accordance with implementations of various techniques described herein.

[0080] Figure 32 illustrates elevational views of the standard panel assembly in accordance with implementations of various techniques described herein.

DETAILED DESCRIPTION

[0081] The integrated construction system of the present disclosure was designed to rectify many of the shortcomings conventional systems, including to further reduce the amount of components needed and maintain a high degree of versatility. In addition, the present integrated construction system is primarily built from non-welded lightweight aluminum components, with minimal steel items used for various fittings and connectors.

[0082] As stated above, prior art forming and shoring systems were designed to be independent. Besides the integrated construction system described in the present disclosure and the system disclosed in Applicant's related co-pending U.S. Patent Application No. 15/630,923, which is herein incorporated by reference, there is no integrated system disclosed in the prior art where standard elements of the integrated system can be used in both a formwork system configuration and a shoring system configuration. The present integrated construction system functions as one complete system for both vertical and horizontal aspects of concrete construction. The present integrated construction system can also be configured to provide a heavy-duty access or scaffolding system.

[0083] The present disclosure provides a shoring system that is part of a larger integrated construction system. This shoring system includes several key unique features that are not found in similar systems currently available in the market. These unique features are outlined below.

[0084] None of the prior art individual construction systems provides a system that provides the aspects of formwork, shoring and provision of safe worker access during construction. The present integrated construction system forms part of a complete "construction system" offering that satisfies all three of the aforementioned aspects of construction.

[0085] In one implementation, the present integrated construction system provides aluminum extruded posts with mechanically fastened cast fittings. Prior art modular aluminum shoring systems have bracing ledger and base attachment aluminum welded fittings. However, many of

the prior art shoring systems do not have ledger fittings and, therefore, do not provide any capacity for the ledgers to carry any appreciable load. The present shoring systems provide post fittings, e.g., cast fittings, ledger fittings or fitting rings, attached with mechanical fasteners that are designed to carry loads for multiple situations.

[0086] In one implementation, the present integrated construction system provides a multipurpose aluminum and steel modular ledger. The ledgers may be made from a hybrid of aluminum and steel components vs. welded aluminum.

[0087] The ledgers can be configured into a variety of assemblies for a multitude of applications vs. static sized bracing panels. The ledgers are designed to act as a truss or load bearing member (e.g., vertical or other types of loads) vs. being used solely as a bracing and spacing member.

[0088] The ledger post connections have a removable series of end connections for various uses. The ledger post connections are not permanently mounted and are designed for multiple purposes as opposed to being designed for a single purpose.

[0089] The modular ledger is designed to be useable as: a bracing/spacing panel between vertical posts; a headload or truss shoring member that can hold up shoring loads in a variety of situations; an access platform for vertical shearwall construction; a roof truss system for large enclosures; and a perimeter safety deck system for construction worker access.

[0090] In one implementation, the present integrated construction system provides safety deck solutions for worker access. Safe construction worker access is an important aspect of all high-rise concrete construction projects. The present integrated construction system provides safe worker access to the outer perimeter of floor slab construction during all phases of: a floor pour, shoring setup, slab pour, post-tensioning slab cables, and continuous setup of the next level of shoring. Prior art systems use the actual slab shoring structure to give workers access to the perimeter of the top floor under construction. The problem with the prior art is that once the shoring is stripped, there is no effective means of access to the outer perimeter of a previously constructed floor slab. The issues present in prior art worker access slow down the construction cycle. The present integrated construction system provides perimeter deck access that is provided using components of the integrated construction system but independent of the shoring deck itself, to give worker access to the outer perimeter of the work. This allows the lower level access to remain in place to allow workers continued perimeter access to lower levels, while the upper level construction continues.

[0091] In one implementation, the present integrated construction system provides applications for heavy duty access. Conventional scaffolding systems are generally used to give

workers access to general construction tasks. However, when the applications become extremely high or when the system incurs higher than normal loading conditions, other means of worker access are generally required. The present integrated construction system is able to provide worker access in higher than normal loading situations, while still meeting all OSHA access regulations.

[0092] In one implementation, the present integrated construction system provides heavy duty enclosures. Enclosures or containment structures are a common form of providing environmentally controlled spaces when critical construction processes require weather or other forms of climate protection. When these enclosure structures become large or subjected to high external forces, such as wind, most conventional scaffolding systems do not have the ability to perform in these high external force conditions. The present integrated construction system is able to sustain higher than normal loads and can be configured to provide larger than normal containment structures.

[0093] In one implementation, a mega-shore application is provided. Most prior art shoring systems have either a light or medium duty rating. Other prior art shoring systems may have heavy or very heavy-duty ratings. No prior art system can function across all rating ranges. Posts coupled to a mega-shore bearing plate can be configured in a variety of ways to achieve each level of duty rating. This includes the ability to cluster posts in groups to achieve very high loads in excess of 100,000 lbs. per shore location.

[0094] FIG. 1 shows a configuration providing a shoring application using components of an integrated construction system. FIG. 1 shows primary shoring components: aluminum posts 105, aluminum adjustable screw legs 110, aluminum and/or steel ledger assemblies 115, aluminum header beams (not shown), and aluminum joists 120. The primary components are constructed and assembled together without using any aluminum welding. The primary components of the shoring configuration are designed for multiple uses and are also designed for integration with formwork components of the integrated construction system. For example, the 6 foot panels 125 used to form slab 130 are configured for use in both formwork and shoring applications. As detailed further below, other components in addition to the primary components are included to provide additional applications for roll-back formwork, mega-shoring, perimeter safety deck systems, and heavy duty access systems.

[0095] An example of a perimeter safety deck system 135 is also shown in FIG. 1. This example perimeter safety deck for worker access includes a ledger assembly 140 and a plurality of ledger rails coupled together to form an outer wall 145 (although multiple ledger rails 181, 183 are shown in this example, a single ledger rail may also be used to form the outer wall). In this example, ledger assembly 140 includes ledger rails 171, 173 and includes struts 177 and brace

members 179. The ledger assembly 140 is coupled to post 185 using ledger clamps 167, 169. Ledger assembly 140 is coupled to ledger rails 181, 183 using ledger end fittings 191, 193 and accessory clips 175, 189. Ledger assembly 140 may be supported by bracing element 157. Bracing element 157 may be coupled to ledger 173 using an accessory clip 195. Bracing element 157 may also be coupled to the post 185 using ledger clamp 187. Although a plurality of struts 177 and brace members 179 are shown, certain implementations may include or omit ledger 140, struts 177 and brace members 179.

[0096] Although the ledger assembly includes multiple ledger rails 171, 173, certain implementations may include only one horizontal ledger rail, e.g., ledger rail 171, coupled to post 185 and outer wall 145. In implementations where bracing is utilized, ledger rail 171 may be supported by bracing element 157. In this implementation, bracing element 157 can be coupled directly to ledger rail 171 using clip 195 and coupled to a fitting of post 185 using clamp 187.

[0097] In the example shown in FIG. 1, joists 150 are coupled to the bracing assembly and are used to support a platform 155, e.g., a wood platform. Platform 155 may provide support for shoring in addition to providing worker access via a perimeter safety deck. Platform 155 may support a modular header beam 163 coupled to joists 120, which in turn support a platform 161 and barrier 165. The platform 161 and barrier 165 are used to form an outer edge of the concrete slab 130. In some implementations filler 159 may be included to keep modular header beam 163 and platform 161 level.

[0098] Joists 120, 150 may be coupled to a modular header beam or a ledger rail (e.g., modular header beam 163 or ledger rail 171) using a metal clip that holds a nut and bolt. The head of the bolt slides into a groove along the bottom of the joist 120, 150 and the metal clip connects to either the modular header beam or the ledger rail/panel. Once the clip is in place, the bolt is tightened to connect both members (the joist and the modular header beam or the ledger rail) together.

[0099] The coupling of a joist to a modular header beam is shown in more detail in FIG. 30. FIG. 30 shows a joist 1920 coupled to a shoring assembly 3001 that includes a modular header beam (header extrusion 1003), multi-purpose bearing plate 1008, eye-bolt connector 1040, post end fitting 1016, and a post 1002 having post end fittings 215. Joist 1920 is coupled to the shoring assembly 3001 using standard joist clip 3010 as described above.

[00100] The coupling of a joist to a ledger is also shown in more detail in FIG. 30. FIG. 30 shows a joist 1920 coupled to a modular ledger panel 3002 using joist/ledger clip 3005.

[00101] FIG. 2 includes various system component drawings for modular vertical posts 205 that include post components 210, 215 of the shoring system. The modular vertical posts 205

may be provided in various lengths. In one implementation, the modular vertical posts 205 have lengths of 2 feet, 3 feet, 4 feet, 6 feet and 9 feet. Each of the posts 205 is made up of a longitudinal extruded post 210 and independent fittings, e.g., ledger fitting 215, that are fastened to the post. The independent fittings are not welded to the post. The independent fittings are, instead, mechanically fastened. The fittings are coupled to the post by sliding the fitting down the post, twisting the fitting into place and mechanically fastening the fitting to the post. The fitting is twisted into place using a groove 207 lathed into the ribs of the post 205. The groove 207 is obscured by the fitting 215. Fittings are placed onto the post at predetermined intervals. In one implementation, fittings fastened to the post are placed 12 inches apart.

[00102] FIG. 29 illustrates a post without fittings. Post 2905 includes ribbed portions 2925, 2930, 2935, 2940 and grooves 2910, 2915, 2920. The post is formed as a longitudinal extrusion having ribs. The grooves 2910, 2915, 2920 are lathed/cut into the ribs of the post 2905 at predefined intervals resulting in the post having the grooves 2910, 2915, 2920 and the ribbed portions 2925, 2930, 2935, 2940. As described above, the fittings are coupled to the post by sliding them down the ribbed portions 2925, 2930, 2935, 2940 of the post. The fittings are then twisted into place using grooves 2910, 2915, 2929.

[00103] Screw legs 255 are provided in various lengths and are used to adjust a height of the vertical post. The height of the post may be adjusted by using the screw legs on one or both ends of the vertical post. The bearing plate 220, mega-shore bearing plate 225, slope bracket 230, post hinge 235, screw leg connector clips 240, swivel caster shoe 245, and deck drophead 250 are used with the vertical posts to provide various shoring application configurations. FIG. 2 further includes a side view of one configuration of a shoring assembly 260 using vertical posts 265, screw legs 270, the ledger panel assembly 275, bearing plates 280, a header beam 285, and joists 290.

[00104] FIG. 3 shows details of a post extrusion, and a ledger fitting. Implementations of the integrated construction system may refer to a modular vertical post (e.g., modular vertical post 210), a post (e.g., post 305) and a post extrusion (e.g., post extrusion 1525) interchangeably. Implementations of the integrated construction system may also refer to a ledger fitting (e.g., ledger fitting 215), a post ledger fitting (e.g., post ledger fitting 1530), and a fitting ring (e.g., fitting ring 307) interchangeably. FIG. 3 shows a cross-sectional view of post 305. Post 305 is an extruded aluminum post. Also shown is a fitting, e.g., fitting ring 307. Fitting ring 307 is used to attach a ledger or ledger assembly to post 305. Ledgers and ledger assemblies are described in more detail below in FIGs. 13-17. In one implementation, the fitting ring 307 is spaced every 12 inches along the post 305.

[00105] As also described above in FIG. 2, the fitting ring 307 is slid down the post 305 and then twisted into place on the post 305. After twisting the fitting ring 307 into place on the post 305, the fitting ring 307 is mechanically fastened to the post, e.g., with a screw. The feature is unique to this system, as all others weld connection fittings to the posts

[00106] The post 305 is configured to be a complete extruded piece, e.g., constructed of aluminum. The post 305 is cut to a specific length. A groove, e.g., groove 207, is lathed into the circumference of the post 305 at predetermined locations along the post 305. In one implementation, the groove is lathed into the post 305 every 12 inches. In one implementation, the groove is a ½ inch cut groove. The fitting ring 307 slides down the post 305 and twists into place at each groove. View 320 shows the fitting ring 307 being twisted into the groove, which is shown in FIG. 29. View 320 shows a circular shaft portion 335 of the post 305. View 320 also shows an outer rib portion 337 of the post 305 that remains below the groove. The groove is cut on the vertical ribs of the extrusion, not on the circular shaft. In one implementation, screws may fasten the fitting ring 307 into place to prevent them from moving.

[00107] View 310 and 315 are top and side views of the fitting ring 307, respectively. As previously described, the rings are twisted into place as shown in view 320 and mechanically fastened as shown in view 325, e.g., using screw 330.

[00108] As shown in FIG. 29, there are grooves 2910, 2915, 2920 that are cut into the post extrusion 2905. Protrusion 343 of fitting ring 307 fits into the groove 2910, 2915, 2920. Once fitting ring 307 is placed onto post extrusion 2905, screws 330 are used to hold the fitting ring 307 in place on the post extrusion 2905. The screws 330 that hold the fitting ring 307 in place are seated through hole 339. Optional hole 341 can be used for future attachments, such as lateral plan bracing or cable bracing.

[00109] Configuring posts in the manner described above allows for the installation of posts and ledgers without welding. In addition, configuring posts in this manner further allows posts to take a load. Prior art systems don't allow a ledger to put a load from a ledger onto a post.

[00110] FIG. 4 and FIG. 5 include post end components. The post end components may include the post end fitting of FIG. 4 and/or the screw leg components of FIG. 5.

[00111] FIG. 4 shows various views 405, 410, 415, 420 of a post end fitting. View 405 is a top cross-sectional view of a post end fitting. Views 410, 415, 420 are top cross-sectional, side cross-sectional, and side view respectively, of a post end fitting coupled to a post. The post end fitting can be used on a top portion and a bottom portion of each post. In one implementation, the post end fitting is configured to be a permanent fitting.

[00112] FIG. 5 shows various views 505, 510, 515 of screw leg components. One portion of FIG. 5 shows a side view 505 of a post and screw leg assembly. This view shows a screw leg end fitting 520, a screw leg thread 525, a screw leg adjusting nut 530, screw leg connector clips 535, a post end fitting 540, and an aluminum post 545. The screw leg connector clips 535 allow the screw leg 520, 525, 530 to attach to the post end fitting 540 and fly with the post after a pour.

[00113] Shoring is generally used repetitively from one concrete pour to the next. In typical prior art shoring systems, the shoring system is completely disassembled and then re-assembled on the next position. The present integrated construction system provides the ability to keep much of the setup intact and fly the assembly with a crane from one setup to the next to reduce labor costs. The screw leg clips allow the screw legs to remain attached to the posts, so the screw legs will still turn for adjustment, but also provide the ability to move the post and screw leg as a unit from one pour to the next without being disassembled.

[00114] Another portion of FIG. 5 shows a top view 510 of a screw leg end fitting. Another portion of FIG. 5 shows a side view 515 of the screw leg end fitting. The screw leg assembly 520, 525, 530 is used to vary the height of the shoring assembly, e.g., shoring assembly 260. A portion of the screw leg assembly 520, 525, 530 fits inside of the post 545. Adjustable legs, e.g., screw legs, are used to provide a height needed for a particular application, e.g., within an adjustment range. The screw leg thread 525 is used with a screw leg end fitting 520 and a screw leg adjusting nut 530. In one implementation, the screw leg adjusting nut 530 can be a twisted wing nut. The configuration shown in FIG. 5 allows for an adjustable post having non-welded components.

[00115] FIGs. 6-10 show a multi-purpose bearing plate in various configurations. In one implementation, the multi-purpose bearing plate 602 is constructed of aluminum. The multi-purpose bearing plate may bear on a concrete floor or a sill designed from wood if the shoring assembly is placed over earth fill. FIG. 6 shows various views 605, 610, 615, 620. View 605 is a top view of the multi-purpose bearing plate 602. A top surface of multi-purpose bearing plate 602 has an outer boundary defining an outer edge of the bearing plate. In one implementation, the outer edge includes a plurality of indentations 630. Indentations 630 are used to couple a header beam or other post fittings using a connecting screw. The use of indentations 630 is shown more clearly in FIG. 10 where the eye-bolt connector 1040 is used to couple the multi-purpose bearing plate 602 for various applications. The top surface of multi-purpose bearing plate 602 has an inner boundary 624 within the multi-purpose bearing plate 602 that defines an area 634 shaped to interchangeably accommodate a plurality of components of the integrated construction system. A plurality of members 628 are formed on an outer surface of the inner boundary 624. The plurality of members 628 give added bending capacity between the multi-purpose bearing plate 602 and the post end fitting 617. A plurality of openings 626 are formed within the area 634. The openings

626 are used to couple the multi-purpose bearing plate 602 to other components of the integrated construction system.

[00116] View 610 is a side view of the multi-purpose bearing plate and screws 612 that are used to couple the bearing plate 602 to other components of the shoring system. Screws 612 pass through holes 626 and screw into the post end fitting 617 or screw leg end fitting 622. View 615 is a side view of the multi-purpose bearing plate coupled to a post end fitting 617. Post end fitting 617 is coupled to a portion of a post 632. View 620 is a side view of the multi-purpose bearing plate 602 coupled to a screw leg end fitting 622. The multi-purpose bearing plate 602 can be used on a top portion of a shoring assembly and/or a bottom portion of a shoring assembly.

[00117] FIG. 7 shows various views 705, 710, 715 of a multi-purpose bearing plate 602 in a slope bracket configuration. The multi-purpose bearing plate 602 is coupled to the slope bracket 707 using screws 612. The slope bracket 707 is also coupled to screw leg 702 using screws 706. View 705 is a view of the slope bracket configuration showing a front/rear portion of the slope bracket 707. View 710 is a view of the slope bracket configuration showing a side view of the slope bracket 707. View 715 is a plan view of the slope bracket. The slope bracket configuration is utilized in sloped surface applications or sloped beam applications.

[00118] FIG. 8 shows various views of a post hinge attachment. View 805 shows a bottom plate of a post hinge assembly. View 810 shows a post hinge assembly, which includes a top plate 825, the bottom plate 805, a barrel 830, and a screw fastener 835 and screw 840. View 815 shows the post hinge assembly with posts 845, 850 in an open state. View 820 shows the post hinge assembly with posts 845, 850 in a closed state. The post hinge assembly is useful in moving shoring components.

[00119] FIG.9 shows various views 905, 910, 915 of a swivel caster shoe. Swivel caster shoes can be mounted to a post assembly 917 using the multi-purpose bearing plate 922. View 905 shows one implementation of a swivel caster shoe 935 coupled to a post assembly 920 and a screw leg assembly 925 using a multi-purpose bearing plate 930. View 910 is a top view of the swivel caster shoe. View 915 is side view of the swivel caster shoe.

[00120] FIG. 10 shows views 1005, 1010, 1015, 1020 of different standard post assembly applications using the multi-purpose bearing plate. In other words, the same multi-purpose bearing plate can be used for different applications. The prior art uses different bearing plates for different applications.

[00121] View 1005 shows a sloped slab application. In one implementation, the sloped slab application includes a slope bracket 1001. The slope bracket 1001 is coupled to multi-purpose

bearing plate 1008 using screws 1027. Slope bracket 1001 is also coupled to screw leg 1006 using screws 1029. Screw leg 1006 is further coupled to post 1002.

[00122] View 1010 shows a screw leg and header beam application. In this configuration, screw leg 1006 is coupled to post 1002. Screw leg 1006 is also coupled to multi-purpose bearing plate 1008, e.g., using screws 1027 (not shown). Multi-purpose bearing plate 1008 is coupled to header extrusion 1003 using eye-bolt connector 1040.

[00123] View 1015 shows an application where a header beam is directly coupled to the post. In this configuration, post 1002 is coupled to post end fitting 1016. Post end fitting 1016 is also coupled to multi-purpose bearing plate 1008, e.g., using screws 1027 (not shown). Multi-purpose bearing plate 1008 is coupled to header extrusion 1003 using eye-bolt connector 1040.

[00124] View 1020 shows an application where two posts are coupled together. In this configuration, post 1002 is coupled to post end fitting 1016. Post end fitting 1016 is also coupled to multi-purpose bearing plate 1008, e.g., using screws 1027 (not shown). Post 1013 is coupled to post end fitting 1017. Post end fitting 1017 is also coupled to multi-purpose bearing plate 1019, e.g., using screws 1027 (not shown). Multi-purpose bearing plate 1008 is coupled to multi-purpose bearing plate 1019 using eye-bolt connector 1040.

[00125] As shown in the various views, the modular posts can be used with the same multi-purpose bearing plate to provide different applications.

[00126] FIG. 11 shows drophead components 1105 and a configuration 1110 showing a drophead 1102 coupled to a modular ledger beam 1107. Drophead components 1105 include a drophead top plate 1112, a drophead base plate 1114, a drop head inner tube 1116, a drop head header seat 1118, and a drophead stripping nut 1120. The drophead 1102 provides the ability to drop the shoring and leave the posts in place for reshoring. The drophead components mount to the end of a post or screw leg.

[00127] FIG. 12 shows various views 1205, 1210, 1215, 1220 of a heavy duty or mega-shore bearing plate. View 1205 is a top view of a mega-shore bearing plate 1202. In one implementation, the mega-shore bearing plate 1202 is constructed of steel. The mega-shore bearing plate 1202 may be coupled to a beam or a modular header beam (e.g., modular header beam 1912) near a top portion of a shoring assembly using a metal clip, e.g., standard joist clip 3010. A top surface of mega-shore bearing plate 1202 has an outer boundary defining an outer edge of the bearing plate. The top surface of mega-shore bearing plate 1202 has a plurality of inner boundaries 1224, 1234, 1236, 1238 within the multi-purpose bearing plate 1202. Each inner boundary 1224, 1234, 1236, 1238 defines an area 1240, 1242, 1244, 1246 shaped to interchangeably accommodate a plurality of components of the integrated construction system. A

plurality of members 1226, 1248, 1250, 1252 are formed on an outer surface of each inner boundary 1224, 1234, 1236, 1238. The plurality of members 1226, 1248, 1250, 1252 are the seats where the post end fittings, e.g., post end fitting 617, are mounted to the mega-shore bearing plate 1202, e.g., using screws 612. A plurality of openings 1224, 1254, 1256, 1258 are formed within each area 1240, 1242, 1244, 1246. The openings 1224, 1254, 1256, 1258 are used to couple the bearing plate 1202 to other components of the integrated construction system.

[00128] View 1210 is a side view of the mega-shore bearing plate 1202. View 1215 is a top view of the mega-shore bearing plate 1202 with posts 1228, 1260, 1262, 1264 installed within areas 1222, 1234, 1236, 1238, respectively. View 1220 is a side view of the mega-shore bearing plate 1202 with posts 1232, 1266 and screw legs 1230, 1268 installed.

[00129] The mega-shore or heavy duty bearing plate is used to cluster legs together to handle a very heavy duty load. The heavy duty bearing plate may also be referred to as a high capacity bearing plate. The mega-shore bearing plate accommodates more than one post. In one implementation, the mega-shore bearing plate can accommodate a cluster of four posts.

[00130] FIGs. 13-17 show various configurations for modular ledger panels. FIG. 13 includes various system component drawings for modular ledger panel components. Aluminum ledger rails 1305 of various lengths are shown. The aluminum ledger rails are hollow and can be from 1 foot to 9 feet long. Each ledger rail 1305 includes a plurality of holes placed longitudinally along each side of the rail. The plurality of holes are placed along the rail in a hole pattern. The hole pattern allows other components, e.g., bracing components, and assemblies, e.g., bracing assemblies, to be attached to each rail. Bracing components may include one or more ledger struts 1340. In some implementations, bracing components may include more than one ledger strut and at least two ledger brace members. Example bracing assemblies 1310, 1315, 1320, 1325 are also shown. The bracing assemblies include top 1330 and bottom 1335 ledger rails, ledger struts 1340 (e.g., steel ledger struts) and ledger brace members 1345. Also shown is a double ledger clamp assembly 1350 for 12 inch post spacing, a ledger clamp 1355, a ledger splice 1360, a ledger clamp/end assembly 1365, a ledger guardrail fitting 1370, and a ledger end fitting 1375. When end clamps, e.g., ledger clamps 1355, are coupled back to back and coupled to a post on each side, 12 inch spacing is provided from center to center of the posts. Coupling components, e.g., components 1355, 1360, 1370, 1375, may be used to couple the rails 1305 to other components, e.g., rails, posts, and/or assemblies of the integrated construction system. In addition, a standard accessory clip 1380 and a standard clamp 1385, both of which are disclosed in co-pending U.S. Patent Application No. 15/630,923, can be used with the ledger rails and bracing assemblies of the present disclosure. Ledger clamp/end assembly 1365 may be used to couple standard accessory clip 1380 or standard clamp 1385 to the end of a ledger. The ledger clamp assembly 1365 includes ledger clamp 1355 and ledger end fitting 1375 mated together.

The ledger clamp assembly 1365 and standard accessory clip 1380 can be used for both formwork and shoring applications of the integrated construction system.

[00131] In one implementation, the standard accessory clip 1380 and the standard clamp 1385 can be used to connect formwork components to the ledger rail 1305. In one implementation, the standard accessory clip 1380 and the standard clamp 1385 are used for a one-sided formwork application. In one implementation, no ties are used for one-sided formwork. In this implementation, the ledger and posts become the lateral bracing for the formwork panels.

[00132] FIG. 14 shows various modular ledger configuration examples 1405, 1410, 1415, 1420, 1425, 1430, 1435, 1440, 1445, 1450, 1455, 1460. Typical bracing assemblies are shown for various lengths from 1 foot to 10 feet. The bracing assemblies may be configured to accommodate light duty (LD) and heavy duty (HD) configurations. Examples of LD, HD and standard duty configurations are shown in items 1450, 1455 and 1460, respectively. Struts can be added or removed and the cross-brace size can be changed. Load capacity can be adjusted by adding or removing bracing components.

[00133] FIG. 15 shows a ledger clamp coupled to a post ledger fitting. A ledger rail 1505 is coupled to a ledger clamp 1510 using ledger connectors 1515. The ledger clamp 1510 is coupled to the post extrusion 1525 using a post ledger fitting 307, 1530 that is attached to the post extrusion 1525 using a groove 1535.

[00134] Ledger clamp 1510 is part of the ledger assemblies. Ledger clamp 1510 is the same part as coupling component 1355 and is also shown in modular ledger configuration example 1450. The jaws at the end of the ledger clamp 1510 fit over the top and bottom of the post ledger fitting 307, 1530 and tighten in-place using the adjusting screw on the ledger clamp. This connection allows a load to be transferred from the ledger 1505 to the post, via the post ledger fitting 1530.

[00135] In configurations where the post 305, 1525 handles a load from a ledger rail, the post 305, 1525 is coupled to a ledger rail 1505 via post ledger fitting 1530 and ledger clamp 1510. The ledger rail 1505 can be configured to act as a truss or a load bearing member (e.g., vertical or other types of loads) when coupled to the post 305, 1525. An inner portion of the post ledger fitting 307, 1530 is configured to be coupled to the post 305, 1525, e.g., using groove 1535 and a mechanical fastener (e.g., screw 330). An outer portion of post ledger fitting 307, 1530 is configured to be coupled to the ledger rail 1505 and configured to allow the post 305, 1525 to handle a load from the ledger rail 1505.

[00136] FIG. 16 shows ledger rail fittings. Views 1605, 1610 show ledger rail fittings clamped together in configurations where a ledger in a horizontal position 1615, 1620 is clamped to a ledger

in a vertical position 1625, 1630 using an accessory clip 1635 with an attached ledger end fitting 1640 (view 1605) and a double accessory clip 1645 with an attached guard rail fitting 1650 (view 1610). Also shown is a front/rear view of a ledger tube 1655, a ledger splice 1660, and a front/rear view of a ledger splice 1665.

[00137] In one implementation, ledger rail fittings provide the ability to add a vertical guardrail to the end of a cantilevered ledger. In this implementation, the cantilevered ledger is decked for worker access. The ledger rail fittings allow a guardrail to be installed on the perimeter for worker safety, e.g., to prevent falling.

[00138] FIG. 17 shows a ledger strut and bracing assembly range. The ledger strut 1707 and ledger brace members 1712 are longitudinally adjustable along a pair of ledger rails 1717 in a bracing assembly 1705. Hole patterns in the ledger struts 1715 and the ledger rails 1710 allow different spacing. In one implementation, the hole patterns are punched into the rails at the time of manufacture. The ledger struts 1707 and ledger brace members 1712 in this example configuration can be adjusted along the rails using the hole patterns 1710, 1715. In addition, spacing between the bracing can be adjusted using the hole patterns present on the ledger rails 1717 and ledger strut 1707. Also shown in FIG. 17 are a ledger end view 1720, a ledger brace 1730, an exploded ledger end view 1725, a strut connector 1740 and a brace connector 1735.

[00139] In one implementation, different spacing between the ledger rails in a bracing assembly can be achieved by using differently sized brace members 1712 with the ledger struts 1707. In one implementation, different spacing can also be achieved by adjusting lateral spacing between two ledger struts that are coupled to a brace member. In this implementation, moving ledger struts closer together or further apart and adjusting a coupling location for the brace members along the hole pattern of the ledger struts allows for different spacing to be achieved between the ledger rails.

[00140] FIG. 18 shows examples of modular header beams. Header beams 1805 may have lengths of 4 feet, 6 feet, 8 feet, and 10 feet are shown. In addition, a 3 foot header splice 1810 is shown. The modular header beams, which can be used for a drop deck shoring application are extruded out of aluminum and use modular fittings to attach to the drop deck panels. In addition, the modular header beams can be used without the fittings as open beams. When used as an open beam, e.g., a header beam, capacity can be increased and provides the ability to accept a higher load.

[00141] In one implementation, standard aluminum form panels used in a drop deck shoring application can be easily stripped from the finished concrete pour while leaving the shoring posts in place as re-shoring for the next elevated pour. Re-shoring is used to support fresh concrete floor slabs from underneath while shoring is placed on top for the next elevated floor slab pour.

[00142] FIG. 19 shows beam and joist components. FIG. 19 shows a side cutaway view 1905 of a modular header connector fitting 1903. Modular header connector fitting 1903 includes a plurality of hooks 1909 and a plurality of openings 1907. Modular header connector fitting 1903 is shaped to fit within modular header beam 1912. Modular header connector fitting 1903 may be coupled to the modular header beam 1912 via openings 1907. FIG. 19 also shows a view 1910 of a header extrusion, e.g., header beam 1912, with modular header connect fitting 1903 inserted within the header beam 1912. Header beam 1912 includes various openings 1927, 1928, 1929, 1930, 1931, 1932 used to couple the header beam to other components of the integrated construction system. FIG. 19 further shows a view 1915 of a joist 1920 with a synthetic nailer 1925.

[00143] FIG. 19 shows a cross section of the modular header beam 1912. Openings 1927, 1928, 1929, 1930, 1931, 1932 are long grooves when the modular header beam 1912 is extruded as a long member. The grooves are used to couple various metal clips, for example, as described above with respect to FIG. 1. An aluminum joist, e.g., joist 1920, 1935, 1940, 1945, may be coupled to modular header beam 1912 using a metal clip with a nut and bolt. In one implementation, the head of the bolt slides into the groove of the header beam and the clip can be coupled to the joist. In one implementation, a panel clip, e.g., panel clip 2056, may be coupled to the sides of the modular header beam 1912 to hold formwork panels in place when used for shoring a concrete slab.

[00144] FIG. 20 shows modular shoring using standard panel decking. Item 2005 is a side view of a shoring configuration that uses a post 2015, deck drop head assembly 2020, and a modular header beam 2025 to support standard aluminum form panels 2030, and plywood filler 2035 in a shoring application. Deck drop head assembly 2020 includes a plurality of couplings/fittings made into an adjustable assembly, shown in figure 11, as an exploded view item 1105 with individual items 1112, 1114, 1116, 1118, 1120 and an assembled view item 1102. This is the same as figure 20 with items 2007, 2008, 2009, 2011 and 2020. Couplings/fittings 2007, 2009, 2011 are welded to a sleeve 2008 or 2020. The sleeve 2008 is slide-ably engaged with an inner tube 2006. An adjusting nut, figure 11, item 1120, of the deck drop head assembly 2020 has two settings. The first setting occurs when the deck drop head assembly 2020 is set in place prior to a concrete pour, as shown in FIG. 20. Once the concrete slab is poured and hardens, the nut of the deck drop head assembly 1120 is twisted 90 degrees so that the sleeve 2008 drops downward. The header beam 1912, deck panels 2030, 2032 and filler 2005 drop as well and can be stripped out and set for later use. In this implementation, the post 2015 may remain in place as re-shoring and another set of posts may be installed on the next floor level. The stripped deck panels 2030, 2032 and header beams 1912 can then be installed on the next set of posts so that the next flour slab can be poured. This process may be repeated until all floors have been poured. The plurality of couplings 2007, 2009, 2011 are shaped to accommodate the plurality of hooks

1909 of the modular header connector fitting 1903. The modular header beam 1912 is coupled to the deck drop head assembly 2020 via modular header connector fitting 1903 and supports standard aluminum form panels 2030, 2032. In this implementation, deck drop head assembly 2020 supports plywood filler 2035. The standard aluminum form panels 2030, 2032 are useable for both formwork and shoring applications.

[00145] View 2010 is a view in a span direction of the modular header beam 1912 holding up standard aluminum panels 2045, 2047. Form alignment plates 2050, 2052 are used to connect the modular header beam 1912 to the standard panels 2045, 2047. Deck panel clip 2054 is used to couple modular header beam 1912 to standard aluminum panel 2047. Deck panel clip 2056 is used to couple modular header beam 1912 to standard aluminum panel 2045. Deck panel clips 2054, 2056 are used to couple the header beam to other components using grooves 1927, 1928, 1929, 1930, 1931, 1932 as described above with respect to FIG. 19.

[00146] FIG. 21 shows modular shoring using standard joist decking. Item 2105 is a side view of a shoring configuration that uses a post 2015, deck drop assembly 2020, and a modular header beam 1912 to support joists 1920, 1935, 1940, 1945 holding up plywood deck material 2135. Deck drop head assembly 2020 includes a plurality of couplings 2007, 2009, 2011. The plurality of couplings 2007, 2009, 2011 are shaped to accommodate the plurality of hooks 1909 of the modular header connector fitting 1903. The modular header beam 1912 is coupled to the deck drop head assembly 2020 via modular header connector fitting 1903 and supports the plywood deck material 2135 using joists 1920, 1935, 1940, 1945 and deck drop head assembly 2020. Joists 1920, 1935, 1940, 1945 may be coupled to the plywood deck material 2135 using synthetic nailers 1925, 1950, 1955, 1960.

[00147] The standard panels 2030, 2032 of FIG. 20 are 4" deep. The joists 1920, 1935, 1940, 1945 of FIG.21 are 6.5" deep. In addition, 0.5" thick plywood sits on top of joists 1920, 1935, 1940, 1945. In this implementation, a joist and plywood configuration has a total depth of 7". The difference between the standard panel configuration of FIG. 20 and the joist/plywood configuration is 3". The three fittings 2007, 2009, 2011 on the drophead attachment 2020 are spaced 3" apart. Because of the difference in depth of the two configurations (FIG. 20 and FIG. 21), header beam 1912 is coupled to the deck drop head assembly 2020 using the top two fittings 2007, 2009 in FIG. 20 and is coupled to the deck drop head assembly 2020 using the bottom two fittings 2009, 2011 in FIG.21.

[00148] As described above with respect to FIG. 18, the modular header beam 1912 is a hollow aluminum extrusion. As shown in FIG. 18, FIG. 19, FIG. 20 and FIG. 21, the modular header beam has a first end and a second end and is configured to interchangeably support shoring

panels of a shoring assembly (see FIG. 20) and decking panels of a decking assembly (see FIG. 21).

[00149] FIG. 22 shows an implementation of a modular shoring plan of an integrated construction system where standard aluminum panels and filler are used to provide shoring. Although any of the standard aluminum panels can be used in a shoring application, this implementation shows 2x6 and 3x6 panels, e.g., panels 2205, 2207, being used to provide shoring for a horizontal concrete slab. In addition, different sized filler panels can be added as needed. FIG. 22 shows 12 inch (panel 2213) and 3 foot (panel 2215) panels. Panels in prior art shoring systems are only designed for deck slabs. Prior art shoring panels were not used for columns, walls, etc. The present integrated construction system uses panels that can be used vertically for formwork and horizontally for shoring applications. FIG. 22 also shows a perimeter safety deck 2209. FIG. 22 additionally shows an access bay 2211 that provides access to a lower level of a structure under construction. The integrated construction system includes components that may be used interchangeably in formwork, shoring and/or worker access configurations. Different views of the standard aluminum panels being supported by components of the integrated construction system are described below with respect to FIG. 23. The views described below are denoted by an A-A view, which provides a view in a first direction relative to the shoring application and a B-B view, which provides a view in a second direction relative to the shoring application.

[00150] FIG. 23 shows an implementation of modular shoring sections and details. Section A-A is a side view of the shoring support structure. A portion 2301 of Section A-A corresponds to the elements present in FIG. 1. In this view, various posts 2305 and bracing assemblies 2310 are used to support standard aluminum panels 2315 holding up a poured concrete slab 2320. In addition, a perimeter safety deck 2325 is formed from a bracing assembly 2340, joists 2335, a ledger rail 2350 and a bracing element 2345. Section B-B is a view from a different side showing the posts 2302, bracing assemblies 2304, standard aluminum panels 2306, header beams 2308, and the perimeter safety deck 2312. In one implementation, the perimeter safety deck uses an optional pinlock guardrail 2360. FIG. 23 further shows, in greater detail, a view 2355 of a column area of the example shoring deck. This implementation illustrates how to use standard aluminum form panels for both vertical and horizontal applications. In addition, this implementation may be used in a drop deck shoring application.

[00151] FIG. 24 shows various components of the integrated construction system being used together to form a tunnel form. In this implementation, the aluminum form panels are used in a hybrid application where both a formwork and a shoring configuration are used to create the tunnel form. This configuration includes formwork panels 2405, 2410, culvert form 2415, modular header beam 2420, bracing assemblies 2425, 2530, posts 2435 coupled to screw leg assemblies 2460, tie assemblies 2440, standard adjustable filler 2450, and wood shim 2455. In some

implementations, swivel caster shoe 2445 may be coupled to posts 2435 via screw leg assembly 2460. Tunnel form applications can be used to provide an underground culvert, e.g., under a road, that water flows through.

[00152] Culvert form 2415 is made using components of a standard adjustable filler, e.g., filler side rails, lumber clips, and custom-cut wood inner rails to make the shape of a 45 degree corner. Wood shim 2455 may optionally be used by a contractor to achieve a correct form height

[00153] The configuration of FIG. 24 utilizes both formwork and shoring components to achieve a particular configuration. Using formwork and shoring components of the present system minimizes the amount of components needed from disparate systems and also minimizes the amount of custom items that would need to be crafted to achieve a configuration similar to the configuration shown in FIG. 24.

[00154] FIG. 25 shows two views that show a rollback shearwall deck. In view 2505, the rollback mechanism is shown in a set position, i.e., adjacent to the concrete wall 2502. The rollback mechanism includes one or more standard panels 2504, at least one first vertical ledger rail 2506 coupled to at least one horizontal ledger rail 2512 and supported by brace 2508. The one or more horizontal ledger rails are coupled to a bracing assembly 2518 by a rollback strut 2516. The bracing assembly 2518 is coupled to at least one second vertical ledger rail 2514 and supported by brace 2522. In view 2510, the rollback mechanism is shown in a fly position, i.e., pulled back from the concrete wall. In the fly position, elements 2504, 2506, 2508, 2512, 2516 are moved laterally along bracing assembly 2518 from the set position to the fly position. The implementation shown in FIG. 25 provides a rollback shear wall deck system and worker access platform application. Ledger panels are used to provide this rollback mechanism in both vertical and horizontal configurations. FIG. 25 also shows landing bracket 2524, 2526 and landing bracket 2528.

[00155] Once the concrete wall 2502 is poured at one level (in view 2505), the rollback shearwall deck is rolled back to a stripped position (in view 2510). A second landing bracket 2524 is anchored to the new wall (concrete wall 2502), then the entire rollback shearwall deck (i.e., the wall form that includes panel 2504 and the work platform that includes bracing assembly 2518) is lifted vertically from the top to the second landing bracket 2524. Landing bracket 2528 is mounted to an inside edge of the work platform and rests in a groove of landing bracket 2526. When the entire rollback shearwall deck is lifted, landing bracket 2528 comes off the lower landing bracket 2526, and is placed on the second landing bracket 2524, and the process repeats itself until the building is completed to the roof.

[00156] The arrangement shown in views 2505, 2510 is called a “Roll-Back Jump-Form” because the form jumps from one elevation to the next as vertical construction progresses. The

present system utilizes standard components, with a few additional items, e.g., various fillers or other items, to satisfy particular formwork and shoring applications. Prior art systems have more specialized systems and do not use standard components that can be used in various configurations to address various needs.

[00157] FIG. 25 illustrates another example of using an integrated construction system to provide both formwork and shoring to form an exterior shearwall, for example, those typically found on high rise buildings. The wall form and platform are assembled as a unit to allow worker access outside of the building limits at elevation

[00158] The wall form and work platform can be picked up with a crane as a unit and landed onto a bracket at the next elevation. The wall form and work platform also allow the crane rigging to be released safely by the construction workers. The crane rigging is released more safely because the form panel seats itself onto the bracket securely and uses gravity to hold it in-place without human interaction. This allows the workers to access the platform safely to remove the rigging and complete the next wall pour.

[00159] FIG. 26 and FIG. 27 show an industrial heavy duty (HD) shoring application. In particular FIG. 26 shows a plan view of the HD shoring application and FIG. 27 shows an elevational view of the HD shoring application. The configuration described in FIGs. 26 and 27 is used to create vertical columns and horizontal beams. In particular, FIG. 26 illustrates columns 2605 upon which a next layer of horizontal beams are to be placed. Views C-C and D-D show formwork and shoring for a 2nd beam and a 1st beam, respectively. Also shown in FIG. 27 are worker access platforms 2705 and standard panels 2720, 2725 in a formwork configuration.

[00160] Figure 28 illustrates a block diagram of a method 2800 of providing an integrated construction system. At block 2805, a first panel for a formwork configuration of an integrated construction system is provided. At block 2810, a second panel for a shoring configuration of the integrated construction system is provided. At block 2815, a third panel for a worker access configuration of the integrated construction system is provided. The first panel, the second panel, and the third panel are a same panel type, e.g., modular ledger or standard aluminum panel (form panel).

[00161] In one implementation, the posts are all aluminum. The fittings may be cast steel or cast aluminum. With respect to the bracing assembly, the ledger panels are made of aluminum. The end fittings with the screw mechanism may be steel. The vertical struts may be steel. The cross brace may be an aluminum strap. In this manner, the bracing assembly can be a combination of aluminum and steel. The present shoring system does not use any welded aluminum.

[00162] The present shoring system includes a number of advantages and benefits. The present shoring system is part of a larger integrated construction system that provides a total solution for formwork, shoring and heavy-duty access. This new larger integrated construction system has significantly less items in its usable inventory, as compared to other independent task focused systems, i.e., prior art independent formwork systems, prior art independent shoring systems, and prior art independent heavy-duty access systems. The present integrated construction system has a unique approach to the type of materials used in its construction, as well as the method of manufacture. The present integrated construction system, by design, minimizes the number of separate components needed to provide shoring, formwork and worker access application. The integrated construction system further provides a unique method of manufacturing the integrated construction system components.

[00163] The present integrated construction system uses standard panels, e.g., panels 125, 2030, 2032, 2045, 2047, 2205, 2207, 2315, 2306, 2405, 2410, 2504, 2720, 2725, in various formwork, e.g., vertical formwork, and shoring configurations. Figure 31 illustrates standard panel assembly plan views. Top/bottom 3110, 3120 and cutaway views 3105, 3115 are shown for both 3ft (panel 3110) and 2ft panel (panel 3120) widths. Figure 32 illustrates elevational views 3210, 3220 of the standard panel assembly for 2' (panel 3120) and 3' (panel 3110) widths. Top/bottom 3205, 3215 and side elevational 3225 views of panels 3110, 3120 are also shown. Each standard panel 3110, 3120 includes side rails 3227, inner rails 3231 and tie extrusions 3229. Standard panels can be 2' or 3' in width. Each standard panel of width 2' or 3' can have a panel length of 3', 6', or 9'.

[00164] The integration of formwork, shoring and heavy-duty access into one system creates a unique and singular approach for providing a "construction system" vs. individual systems that are designed to handle one of the three applications. The present integrated construction system reduces the amount of inventoried components by over 75%, as compared to existing systems. In addition, this unique combination of components provides new innovative methods to construction worker access that is currently not available on elevated construction sites.

[00165] In combination with the robust nature of the materials of the integrated construction system and the method of assembly, the cost to own the present integrated construction system is vastly reduced for both a dead asset basis, as well as the physical maintenance cost required to maintain a formwork and access inventory. In addition, the integrated construction system provides an increased flexibility to handle field applications, as well as increase the efficiency for the contractors that will use the integrated construction system to build concrete structures.

[00166] The discussion above is directed to certain specific implementations. It is to be understood that the discussion above is only for the purpose of enabling a person with ordinary

skill in the art to make and use any subject matter defined now or later by the patent “claims” found in any issued patent herein.

[00167] It is specifically intended that the claimed invention not be limited to the implementations and illustrations contained herein, but include modified forms of those implementations including portions of the implementations and combinations of elements of different implementations as come within the scope of the following claims. It should be appreciated that in the development of any such actual implementation, as in any engineering or design project, numerous implementation-specific decisions may be made to achieve the developers' specific goals, such as compliance with system-related and business related constraints, which may vary from one implementation to another. Moreover, it should be appreciated that such a development effort might be complex and time consuming, but would nevertheless be a routine undertaking of design, fabrication, and manufacture for those of ordinary skill having the benefit of this disclosure. Nothing in this application is considered critical or essential to the claimed invention unless explicitly indicated as being "critical" or "essential."

[00168] In the above detailed description, numerous specific details were set forth in order to provide a thorough understanding of the present disclosure. However, it will be apparent to one of ordinary skill in the art that the present disclosure may be practiced without these specific details. In other instances, well-known methods, procedures, components, circuits and networks have not been described in detail so as not to unnecessarily obscure aspects of the embodiments.

[00169] It will also be understood that, although the terms first, second, etc. may be used herein to describe various elements, these elements should not be limited by these terms. These terms are only used to distinguish one element from another. For example, a first object or step could be termed a second object or step, and, similarly, a second object or step could be termed a first object or step, without departing from the scope of the invention. The first object or step, and the second object or step, are both objects or steps, respectively, but they are not to be considered the same object or step.

[00170] The terminology used in the description of the present disclosure herein is for the purpose of describing particular implementations only and is not intended to be limiting of the present disclosure. As used in the description of the present disclosure and the appended claims, the singular forms “a,” “an” and “the” are intended to include the plural forms as well, unless the context clearly indicates otherwise. It will also be understood that the term "and/or" as used herein refers to and encompasses any and all possible combinations of one or more of the associated listed items. It will be further understood that the terms "includes," "including," "comprises" and/or "comprising," when used in this specification, specify the presence of stated features, integers, steps, operations, elements, and/or components, but do not preclude the presence or addition of

one or more other features, integers, steps, operations, elements, components and/or groups thereof.

[00171] As used herein, the term "if" may be construed to mean "when" or "upon" or "in response to determining" or "in response to detecting," depending on the context. Similarly, the phrase "if it is determined" or "if [a stated condition or event] is detected" may be construed to mean "upon determining" or "in response to determining" or "upon detecting [the stated condition or event]" or "in response to detecting [the stated condition or event]," depending on the context. As used herein, the terms "up" and "down"; "upper" and "lower"; "upwardly" and downwardly"; "below" and "above"; and other similar terms indicating relative positions above or below a given point or element may be used in connection with some implementations of various technologies described herein.

[00172] While the foregoing is directed to implementations of various techniques described herein, other and further implementations may be devised without departing from the basic scope thereof, which may be determined by the claims that follow. Although the subject matter has been described in language specific to structural features and/or methodological acts, it is to be understood that the subject matter defined in the appended claims is not necessarily limited to the specific features or acts described above. Rather, the specific features and acts described above are disclosed as example forms of implementing the claims.

What Is Claimed Is:

1. An integrated construction system, comprising:
a first panel for a formwork configuration of the integrated construction system;
a second panel for a shoring configuration of the integrated construction system; and
a third panel for a worker access configuration of the integrated construction system;
wherein the first panel, the second panel and the third panel comprise a same panel type.

2. The integrated construction system of claim 1, wherein the panel type comprises a form panel.

3. The integrated construction system of claim 2, wherein the form panel comprises an aluminum form panel.

4. The integrated construction system of claim 2, wherein the second panel is supported by a header beam in the shoring configuration.

5. The integrated construction system of claim 4, wherein the header beam is coupled to a plurality of posts.

6. The integrated construction system of claim 5, wherein the header beam comprises an aluminum header beam and wherein the plurality of posts comprises a plurality of aluminum posts.

7. The integrated construction system of claim 5, wherein at least one bracing assembly is coupled between the plurality of posts.

8. The integrated construction system of claim 7, wherein the at least one bracing assembly comprises:
a first modular ledger;
a second modular ledger; and
at least one ledger strut.

9. The integrated construction system of claim 8, wherein the bracing assembly comprises two ledger struts and ledger brace members.

10. The integrated construction system of claim 1, wherein the panel type comprises a modular ledger.

11. The integrated construction system of claim 10, wherein, in the shoring configuration, the second panel is part of a bracing assembly.

12. The integrated construction system of claim 11, wherein the bracing assembly comprises:
the second panel;
a fourth panel comprising the same panel type; and
at least one ledger strut.

13. The integrated construction system of claim 12, wherein the bracing assembly comprises two ledger struts and ledger brace members.

14. The integrated construction system of claim 12, wherein, in the worker access configuration, the third panel and a fifth panel are part of a second bracing assembly, the fifth panel comprising the same panel type.

15. The integrated construction system of claim 14, wherein a sixth panel is coupled to the second bracing assembly to form an outer wall of the worker access configuration, the sixth panel comprising the same panel type.

16. The integrated construction system of claim 14, wherein a plurality of modular ledger panels are coupled together and are coupled to the second bracing assembly to form an outer wall of the worker access configuration.

17. The integrated construction system of claim 16, wherein the plurality of modular ledger panels are coupled together using a ledger splice.

18. The integrated construction system of claim 14, wherein a plurality of joists are coupled to a top surface of the second bracing assembly.

19. The integrated construction system of claim 18, wherein the plurality of joists support a platform that provides worker access.

20. A method for providing an integrated construction system, comprising:
providing a first panel for a formwork configuration of the integrated construction system;
providing a second panel for a shoring configuration of the integrated construction system; and
providing a third panel for a worker access configuration of the integrated construction system;

wherein the first panel, the second panel and the third panel comprise a same panel type.

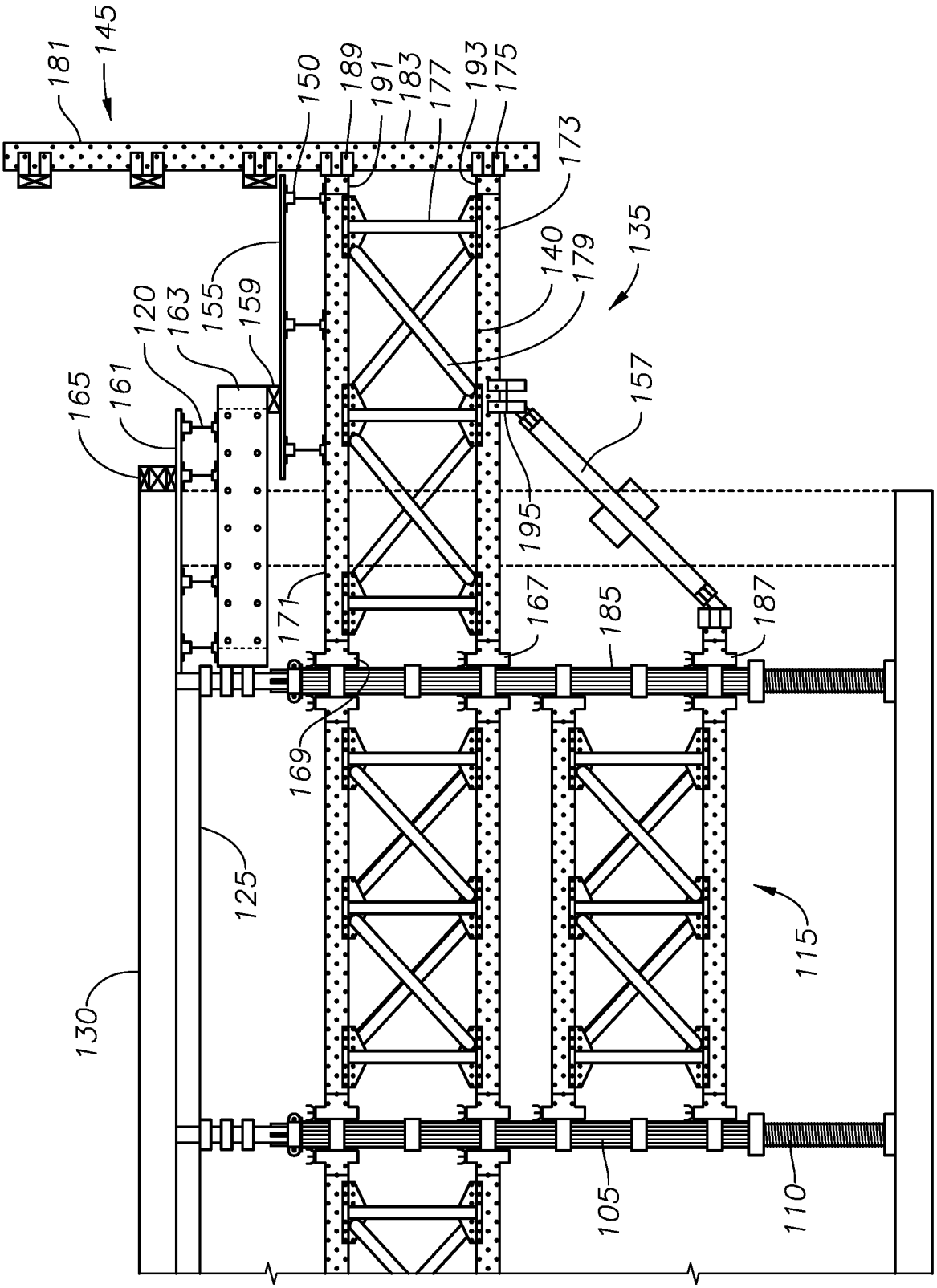
181
145
150
189
191
183
177
193
175
173
135
140
179
120
163
155
159
165
161
157
195
171
167
185
187
169
125
115
130
105
110

FIG. 1

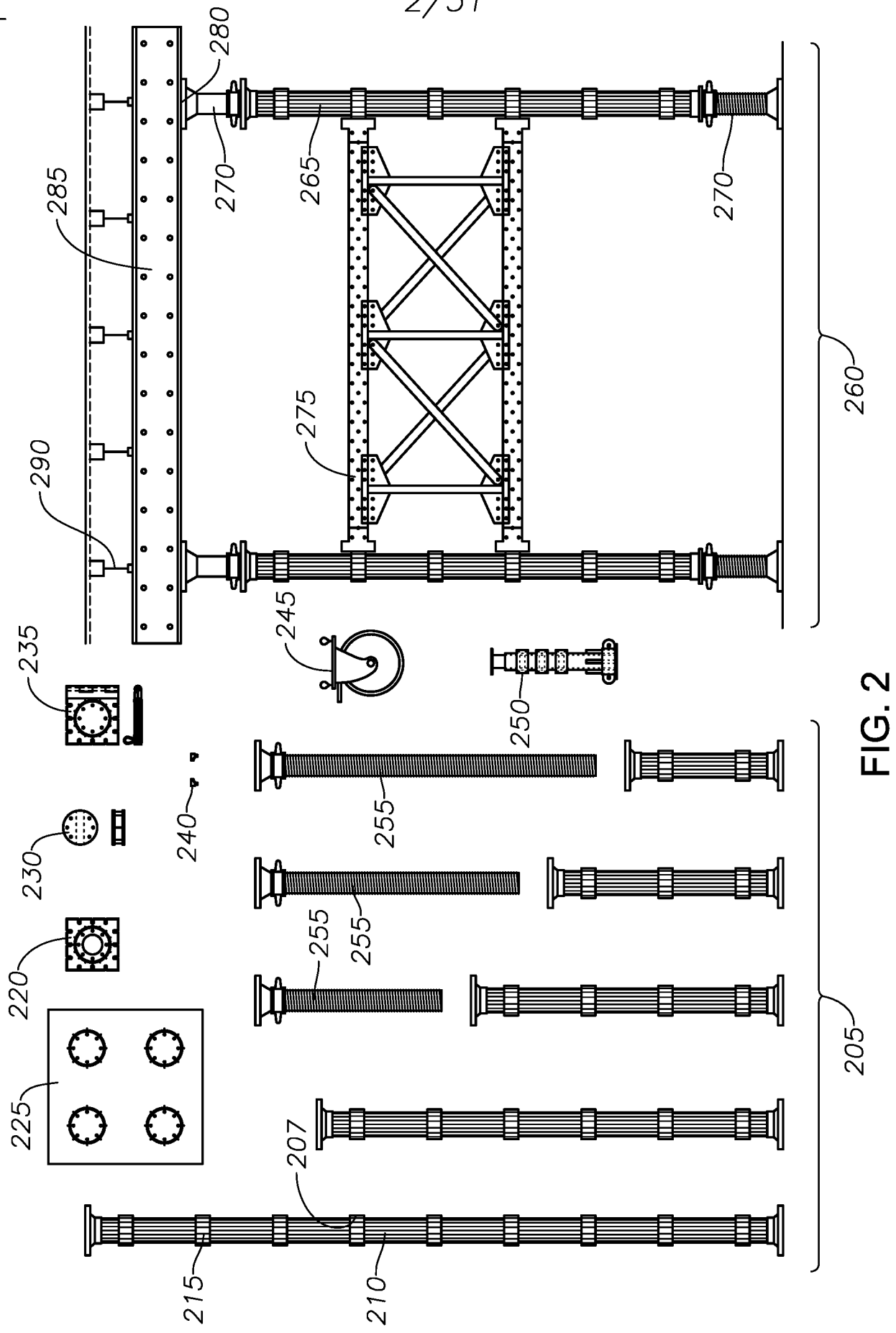
280
270
265
270
285
275
290
260
245
235
250
240
255
230
255
255
220
205
225
207
215
210

FIG. 2

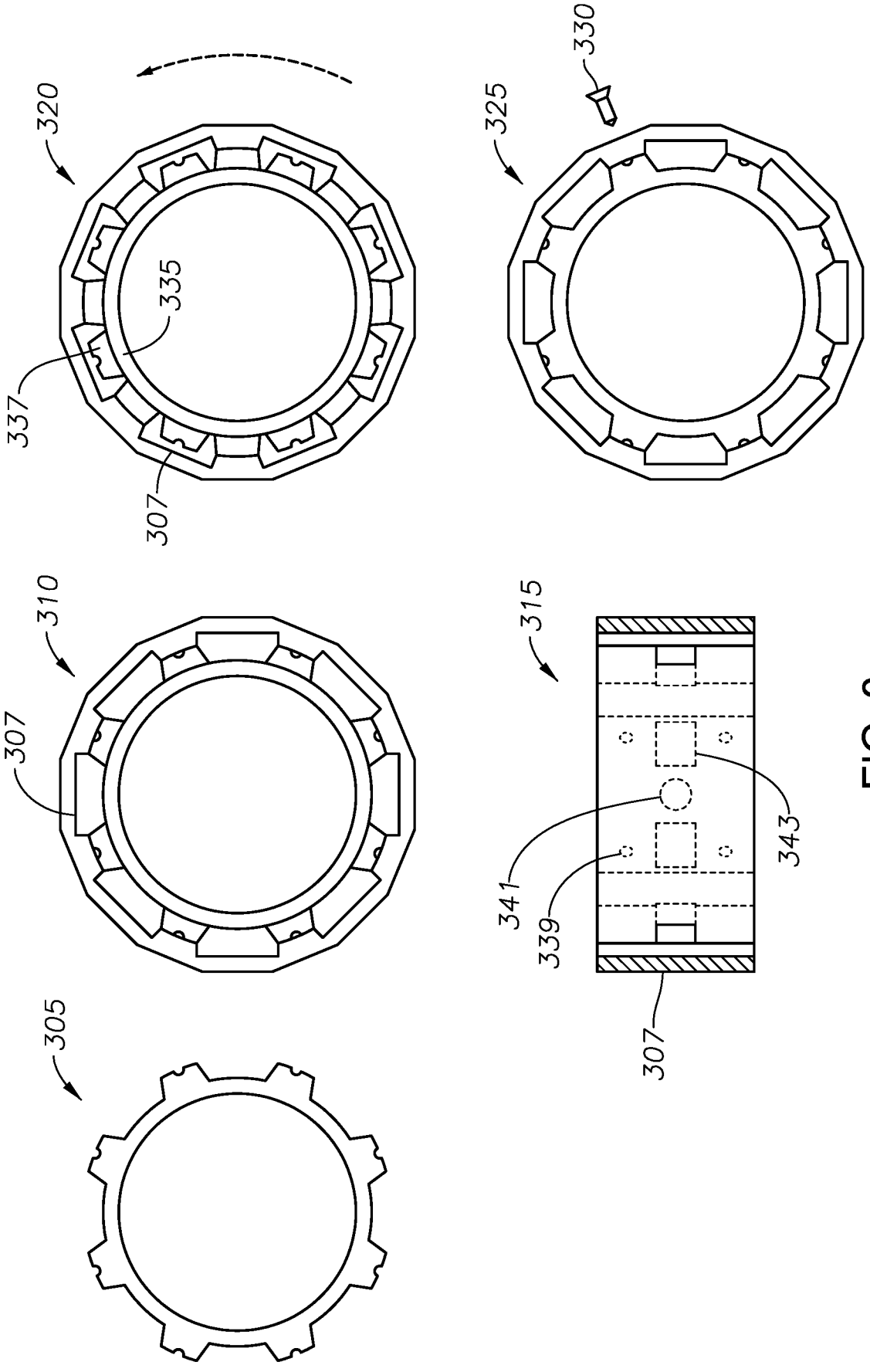

FIG. 3

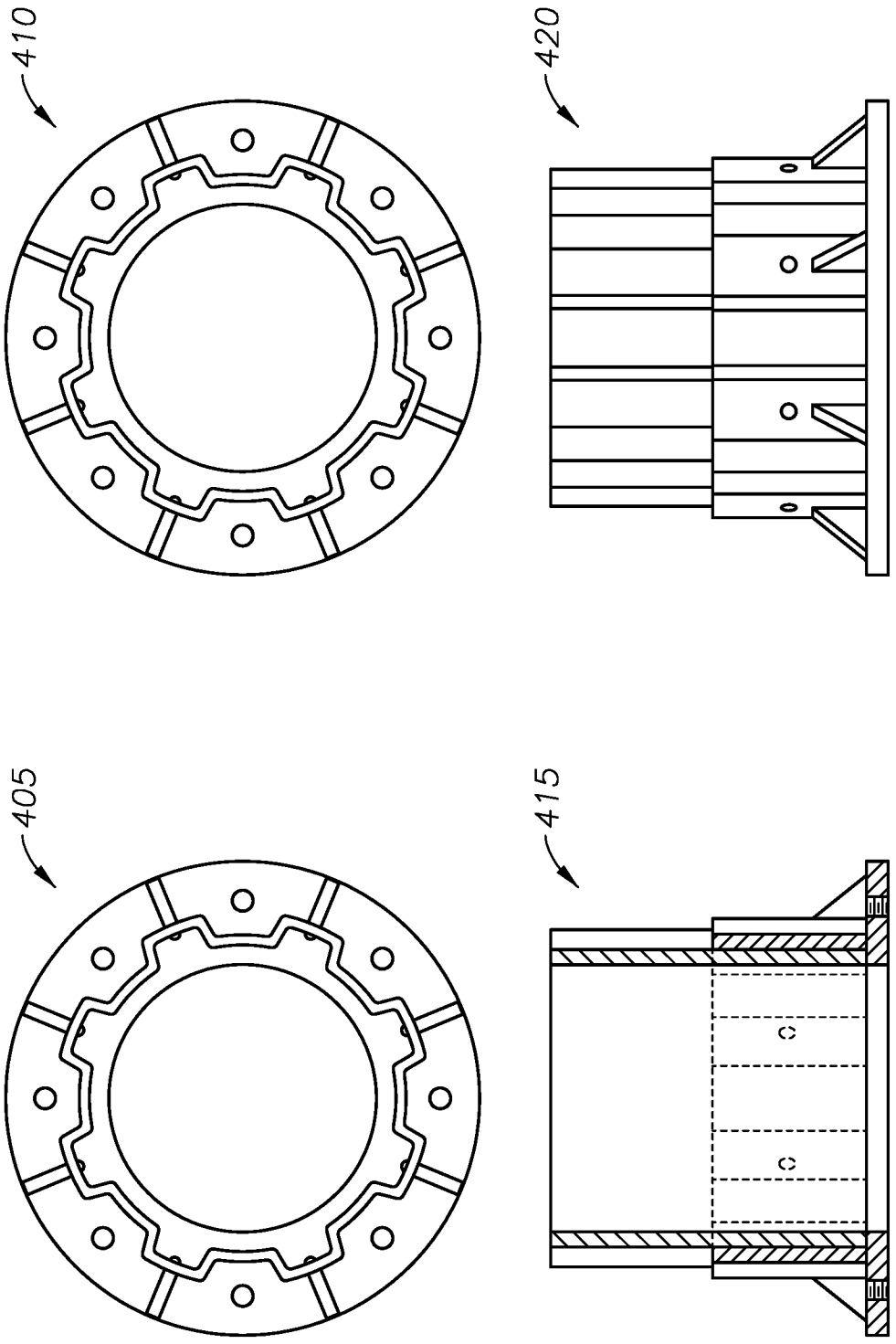

FIG. 4

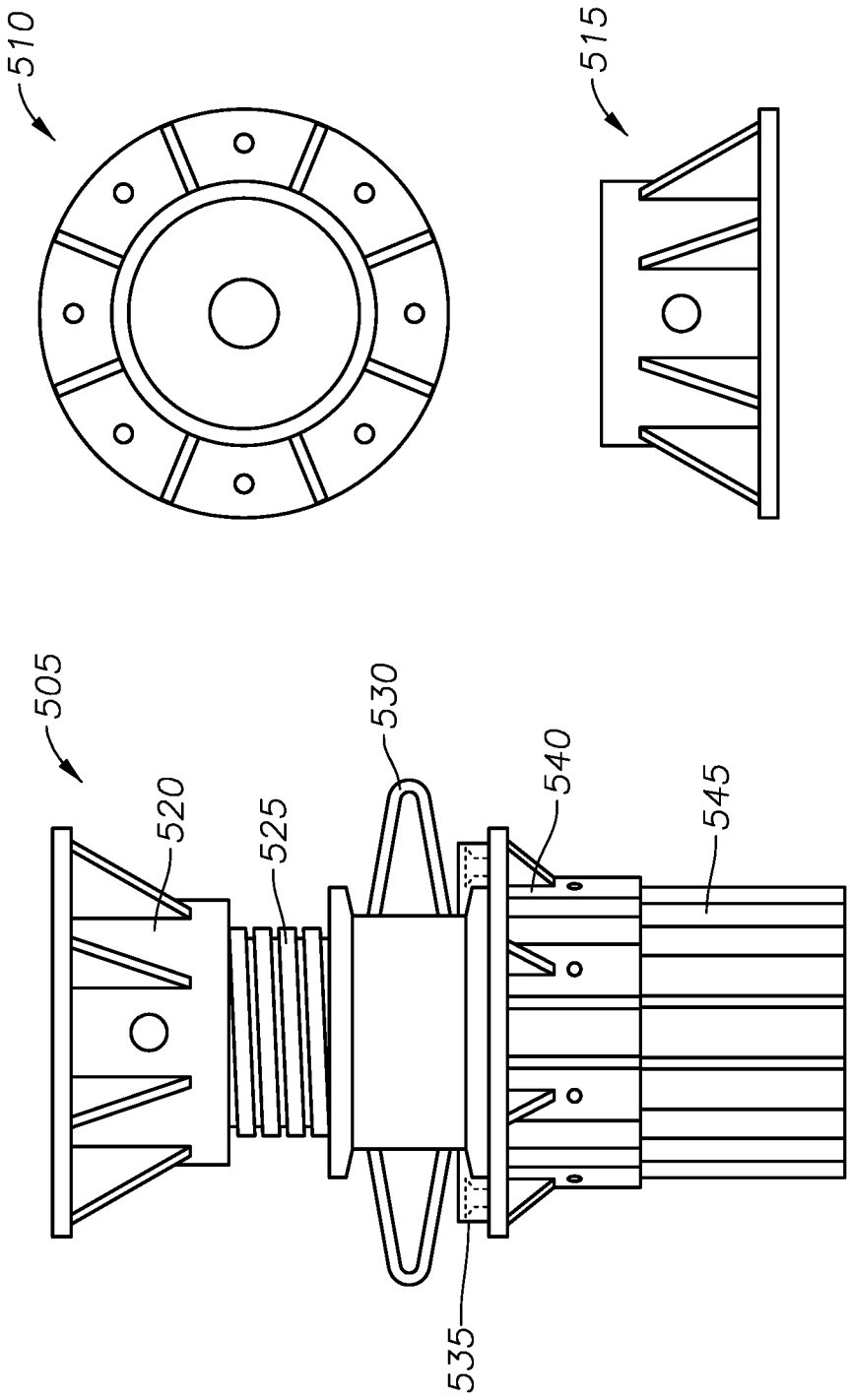

FIG. 5

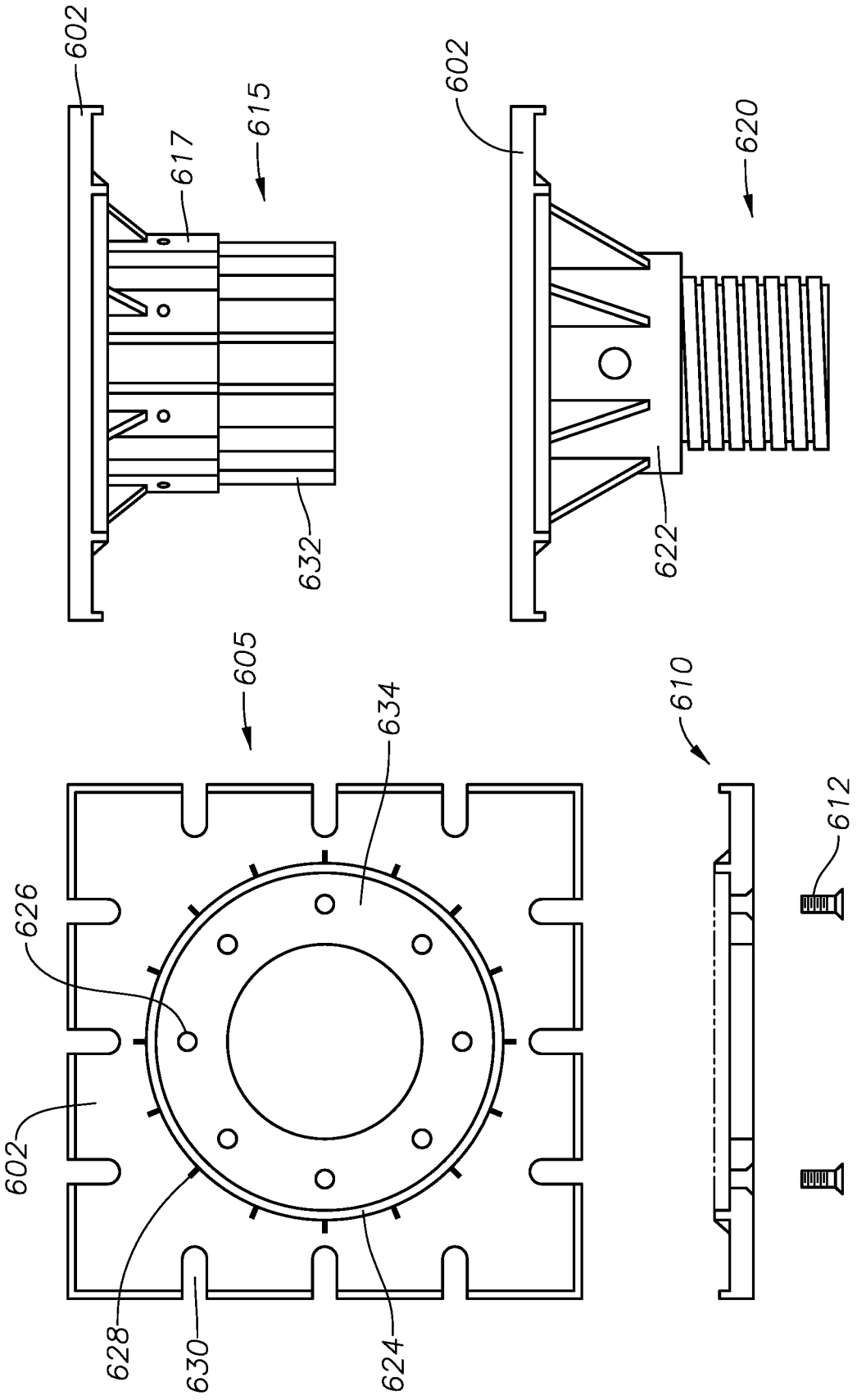

FIG. 6

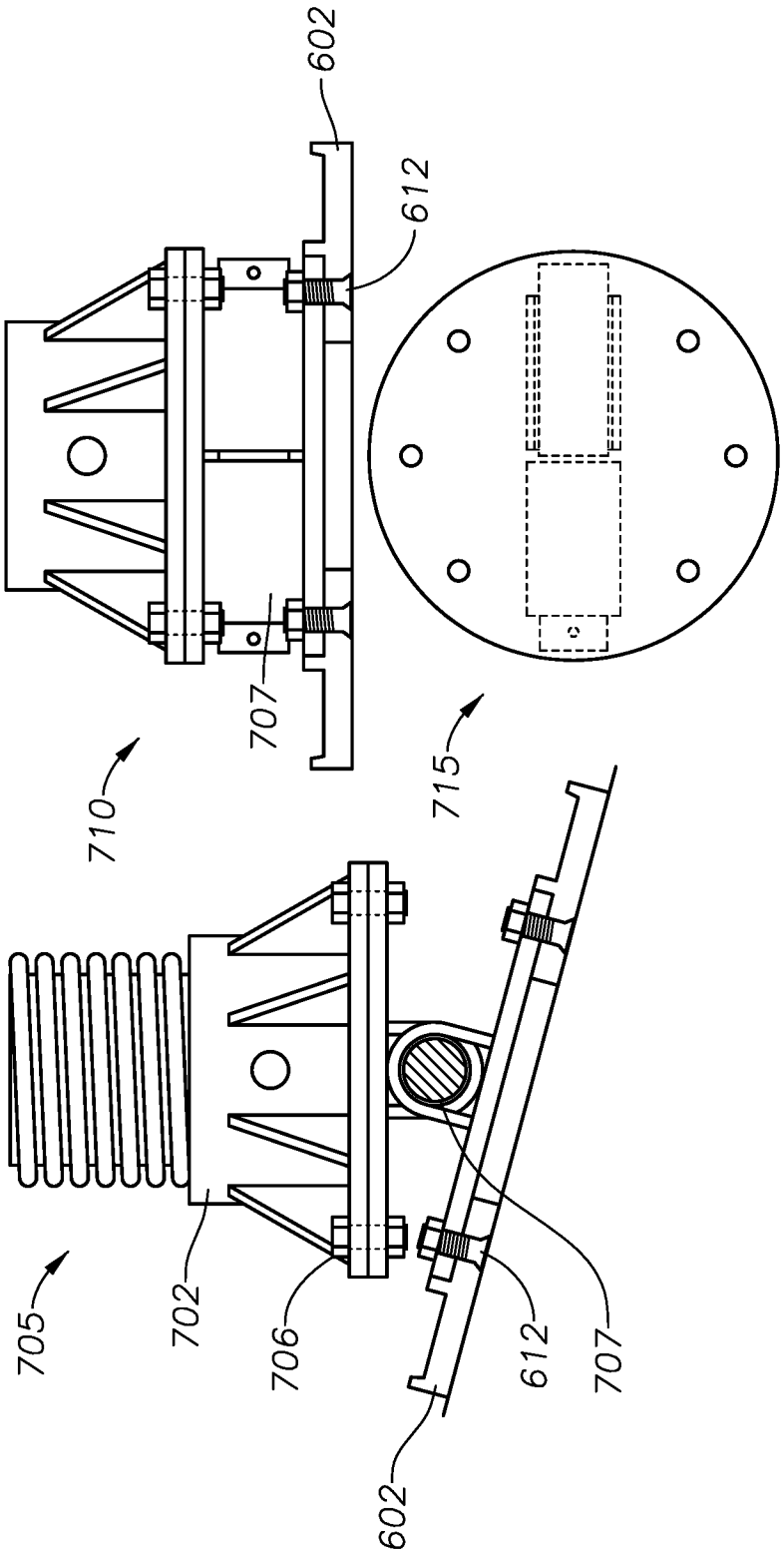

FIG. 7

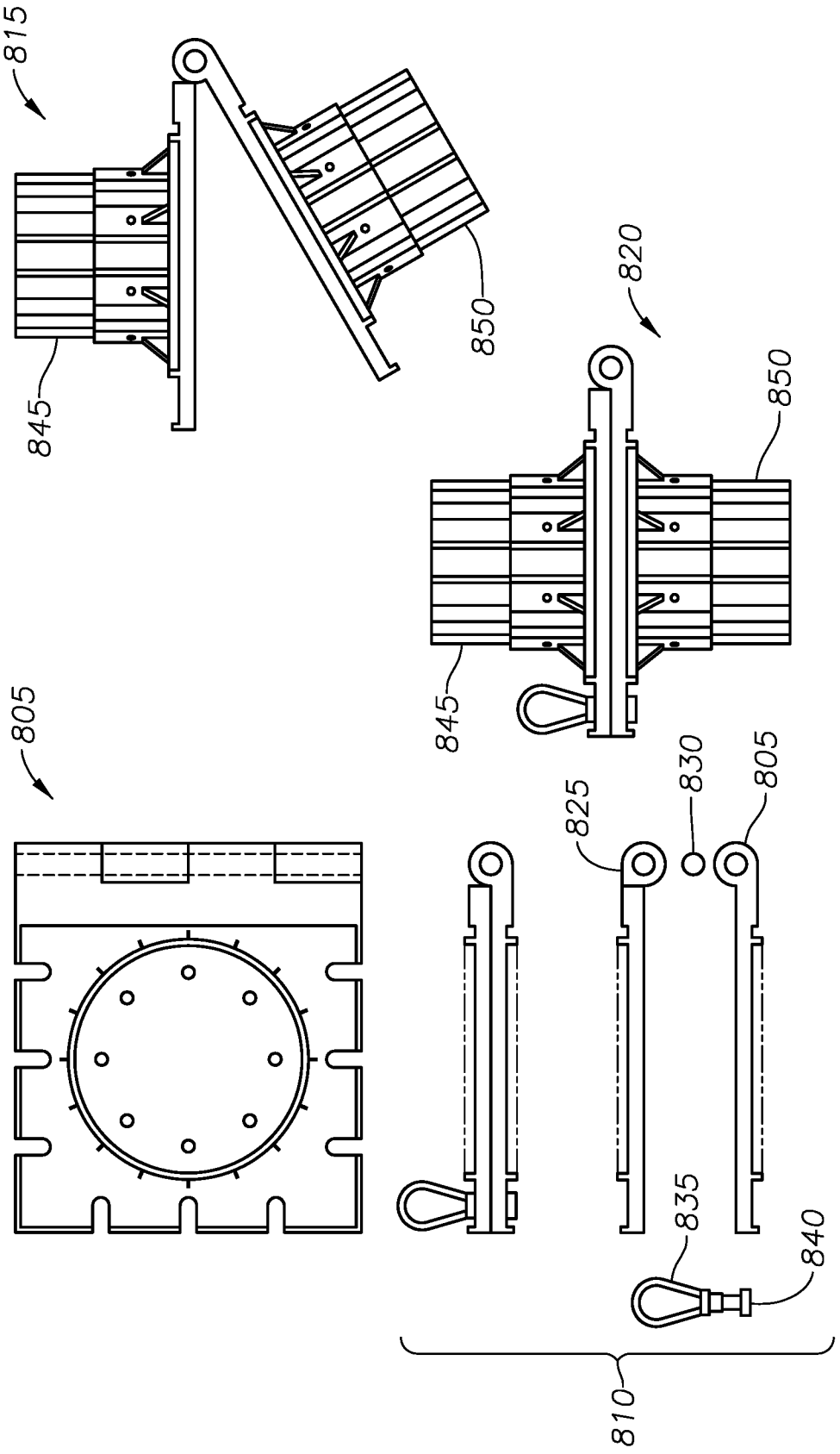

FIG. 8

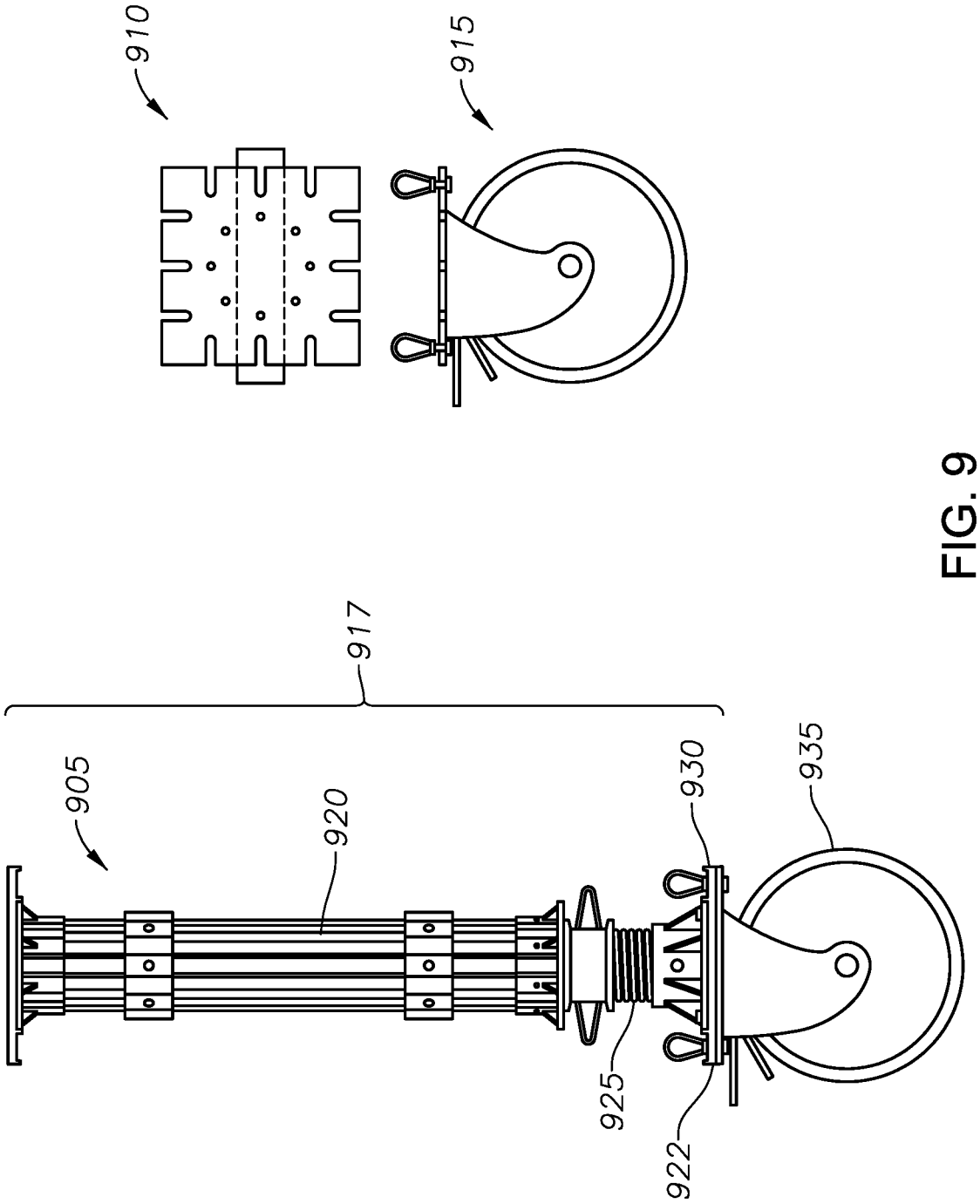

FIG. 9

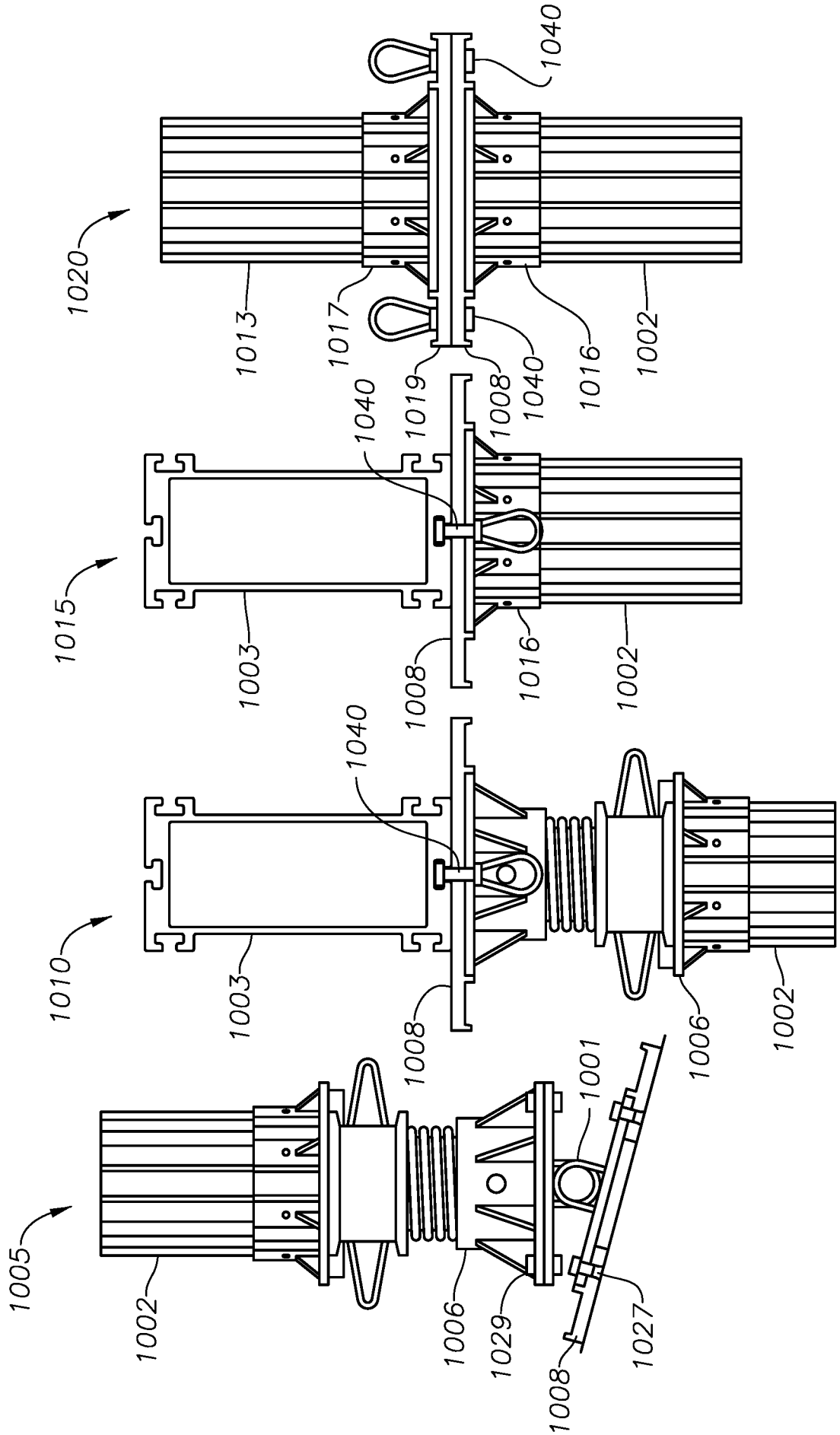
1020
1013
1017
1040
1019
1008
1040
1016
1002
1015
1003
1040
1008
1016
1002
1010
1003
1040
1008
1006
1002
1005
1002
1006
1029
1008
1001
1027

FIG. 10

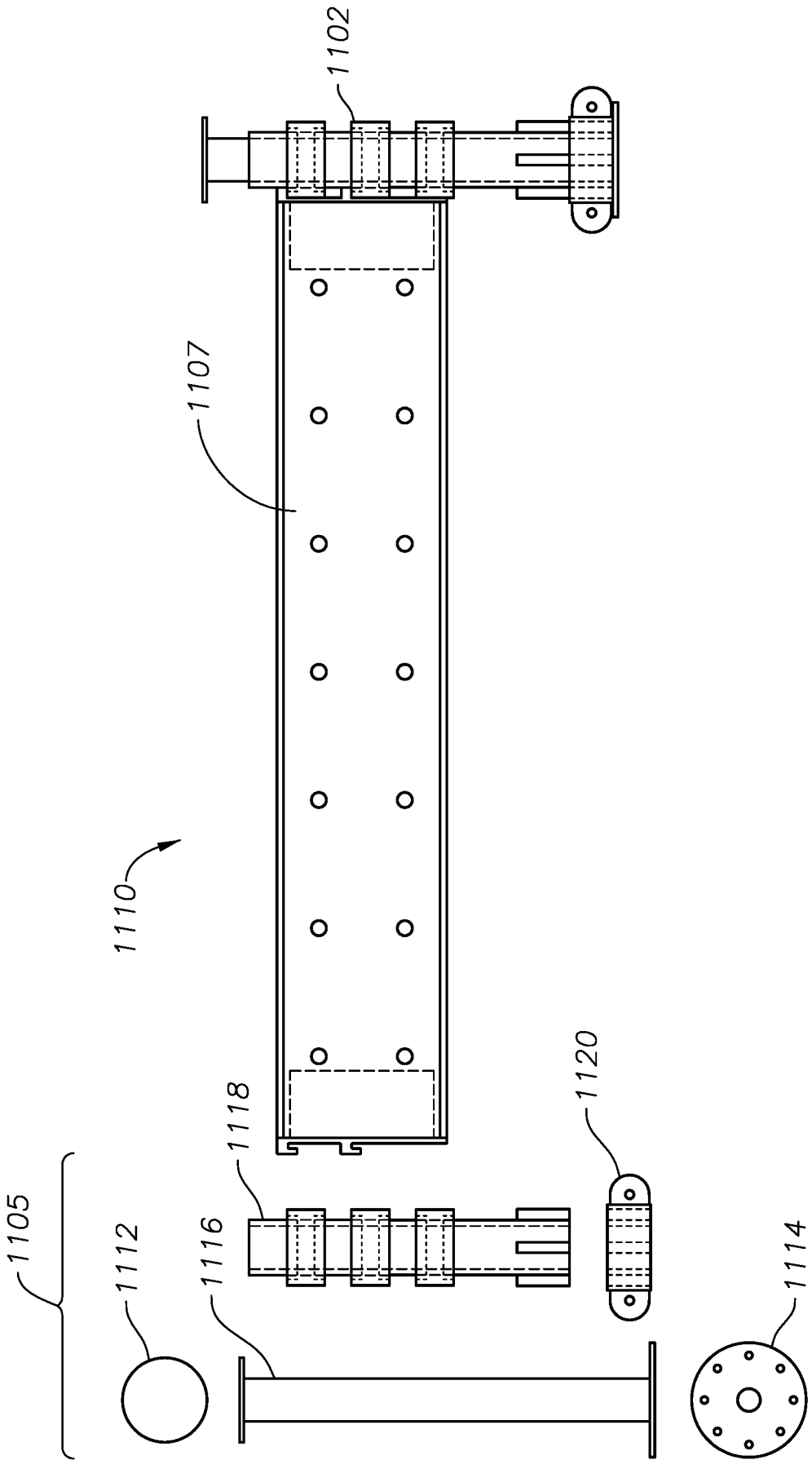

FIG. 11

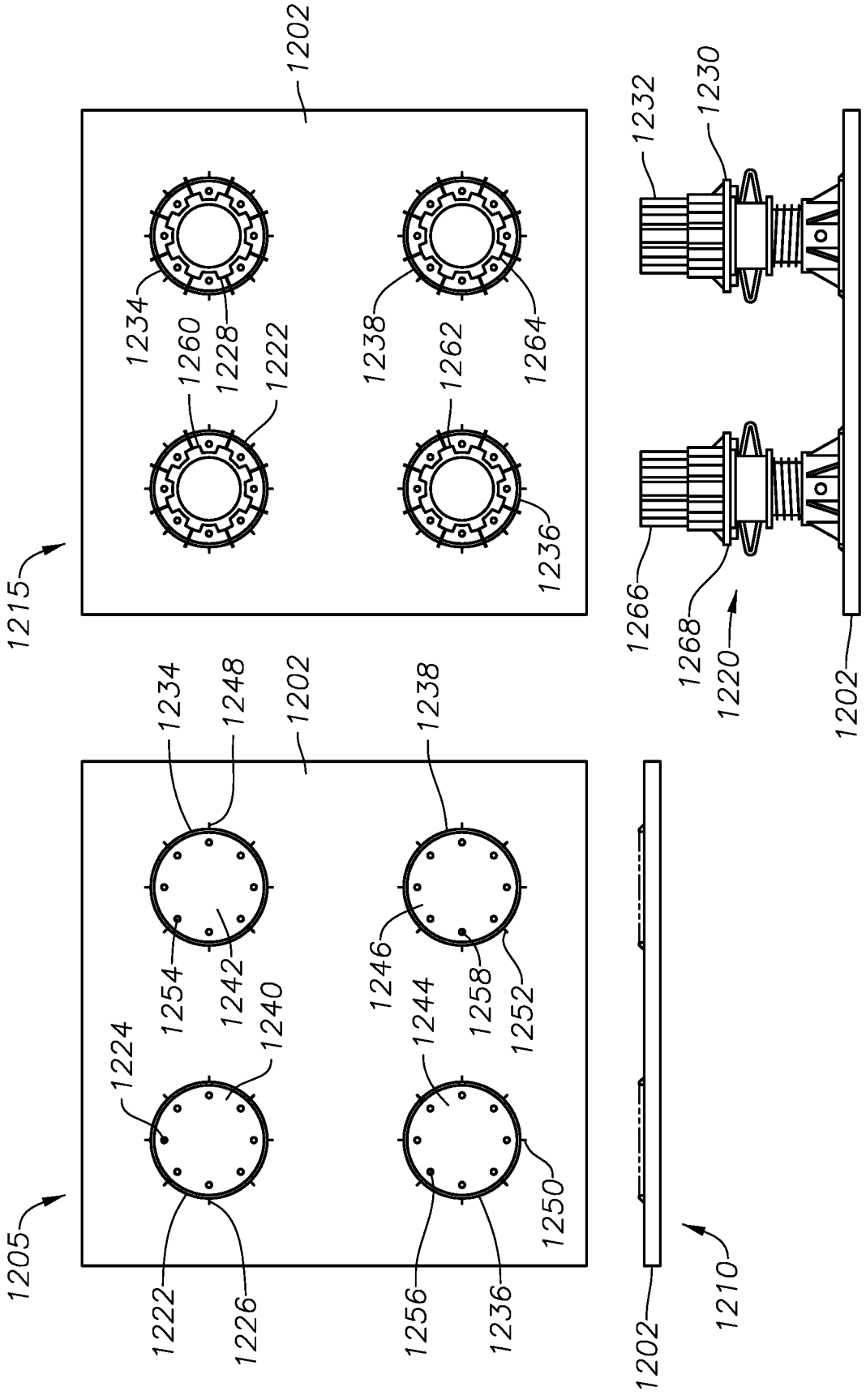
1202
1234
1260
1228
1222
1238
1262
1264
1236
1215
1232
1230
1266
1268
1220
1202
1234
1248
1202
1238
1254
1242
1240
1246
1244
1258
1252
1224
1250
1205
1222
1226
1256
1236
1210
1202

FIG. 12

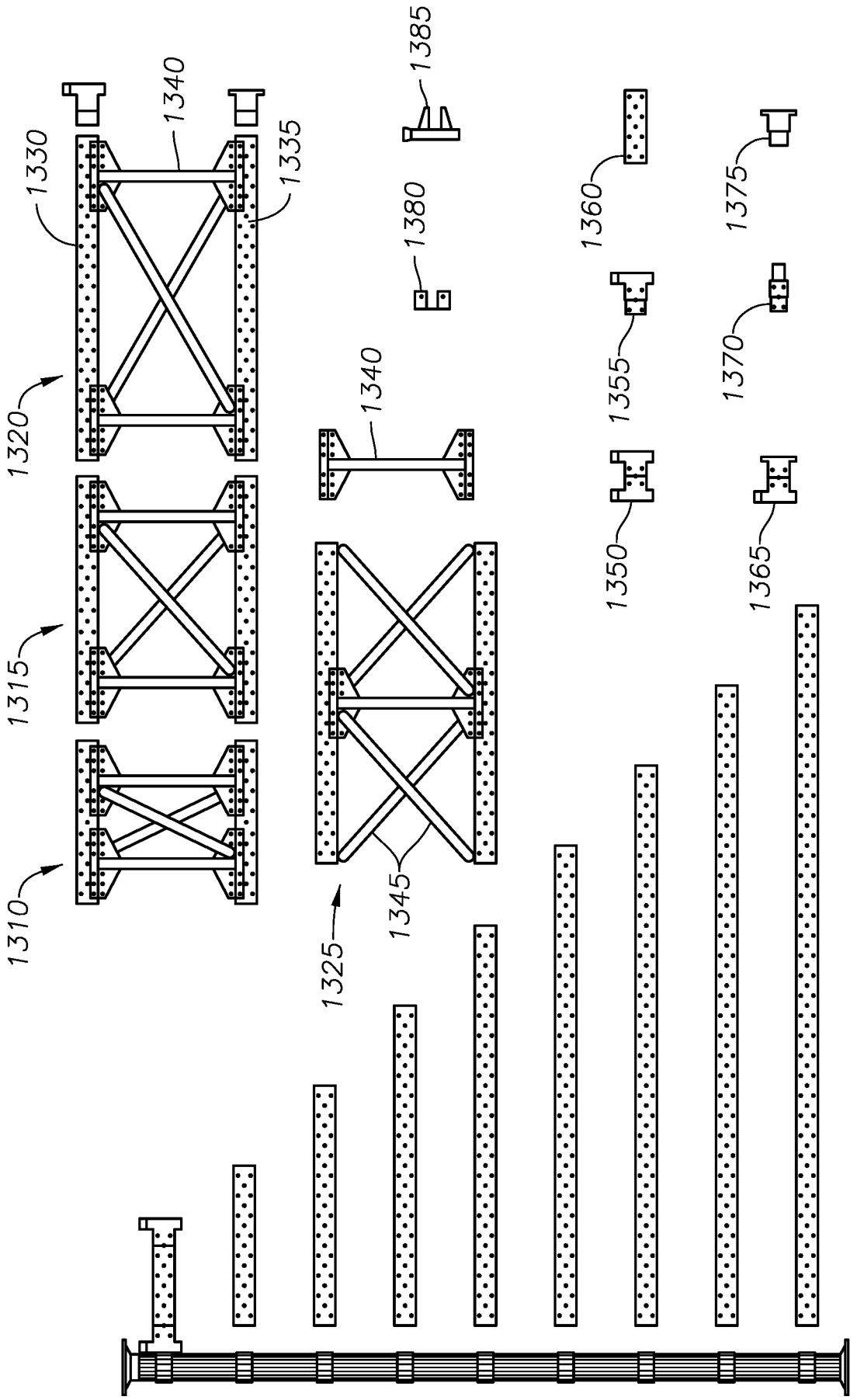
1330
1340
1335
1320
1315
1310
1325
1345
1340
1380
1385
1360
1355
1350
1375
1370
1365
1305

FIG. 13

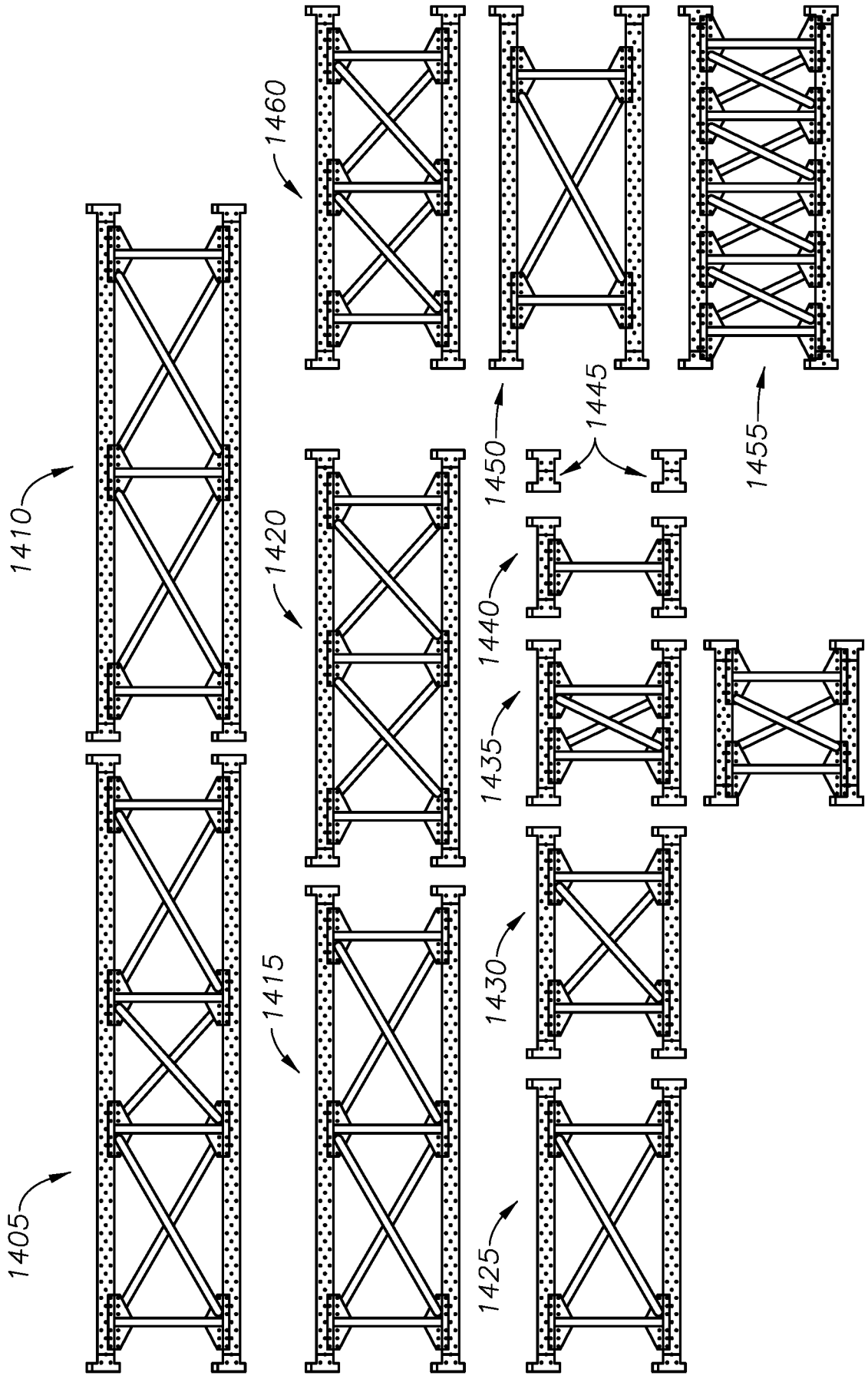

FIG. 14

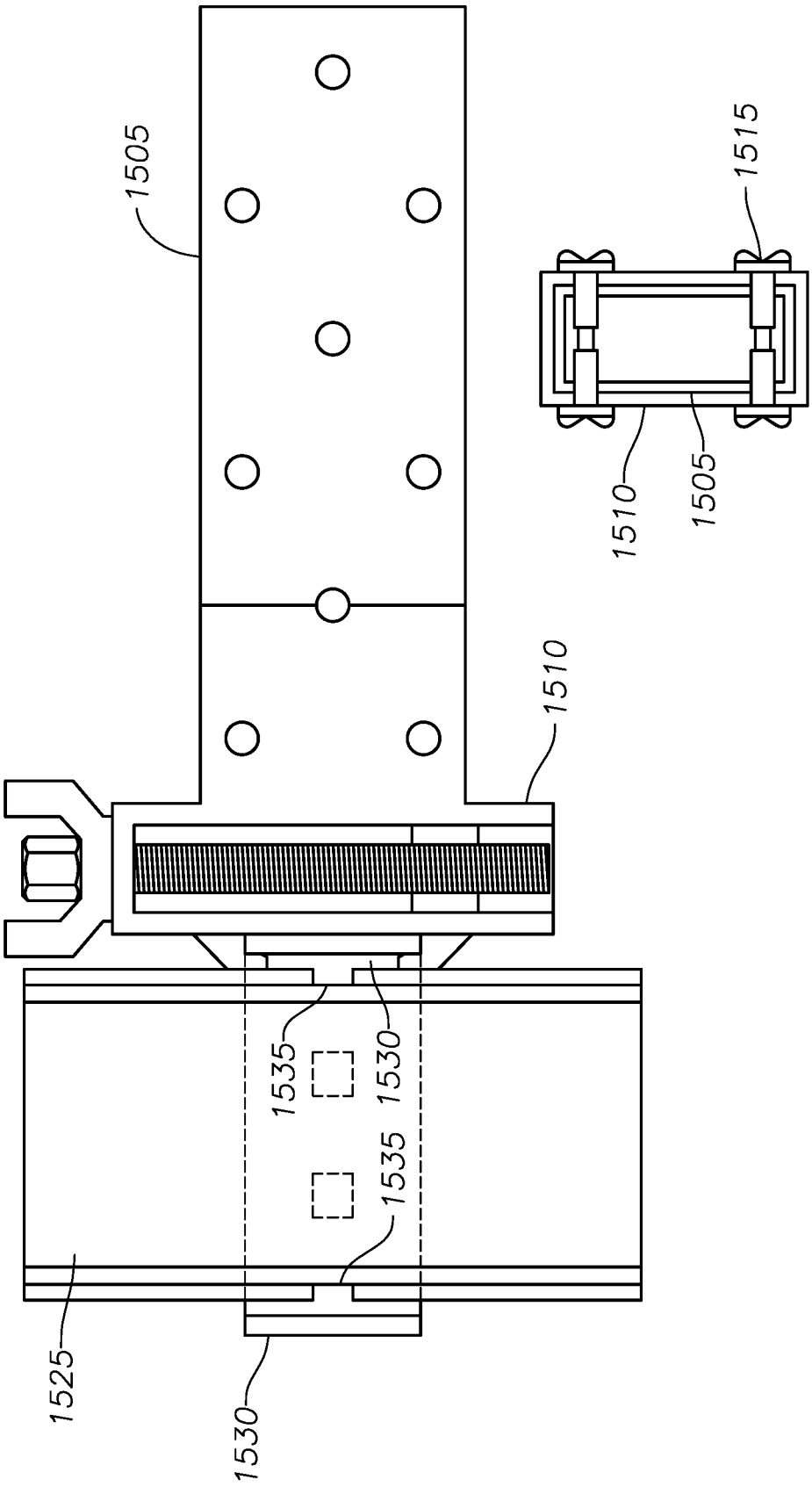

FIG. 15

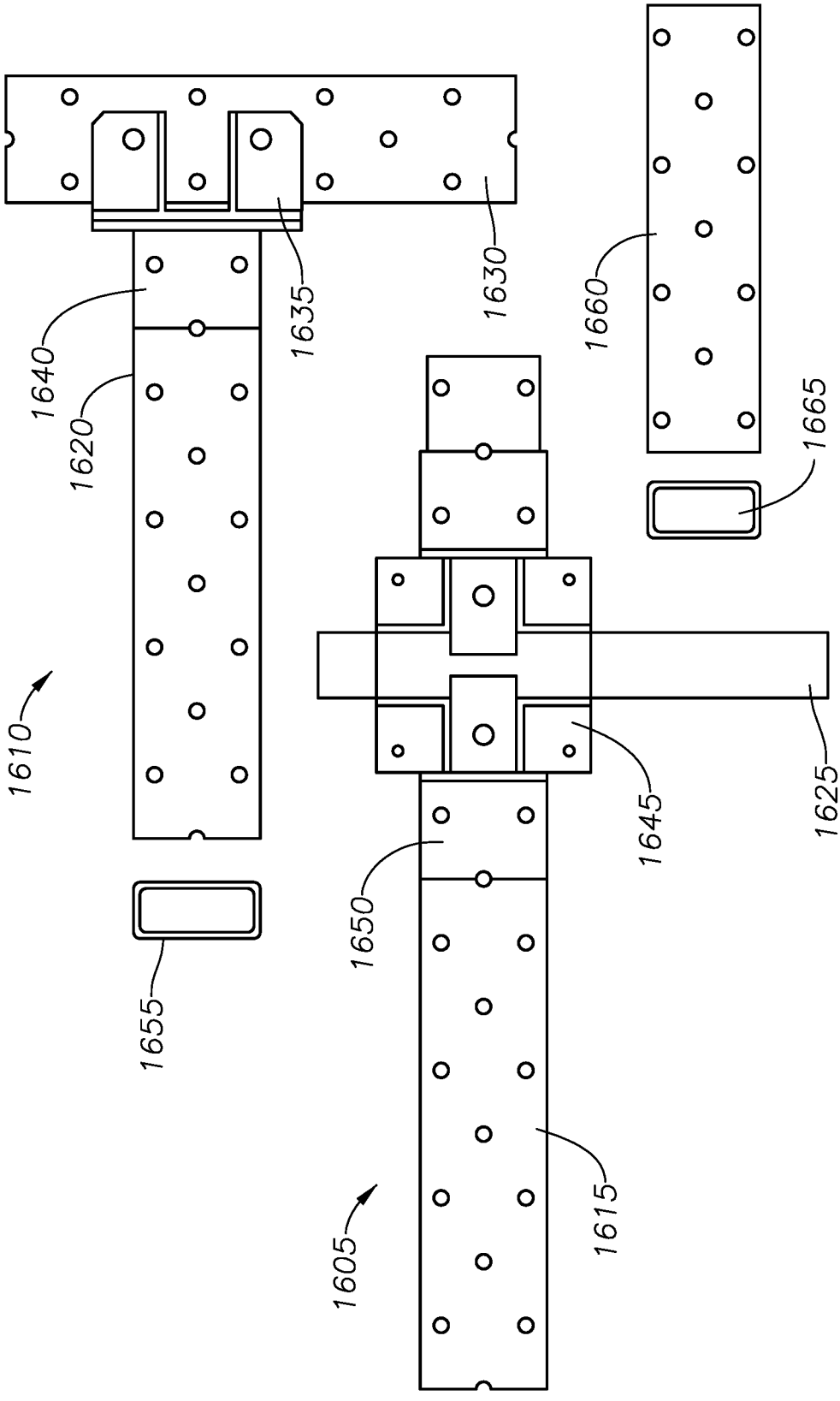
1610
1605
1615
1620
1625
1630
1635
1640
1645
1650
1655
1660
1665

FIG. 16

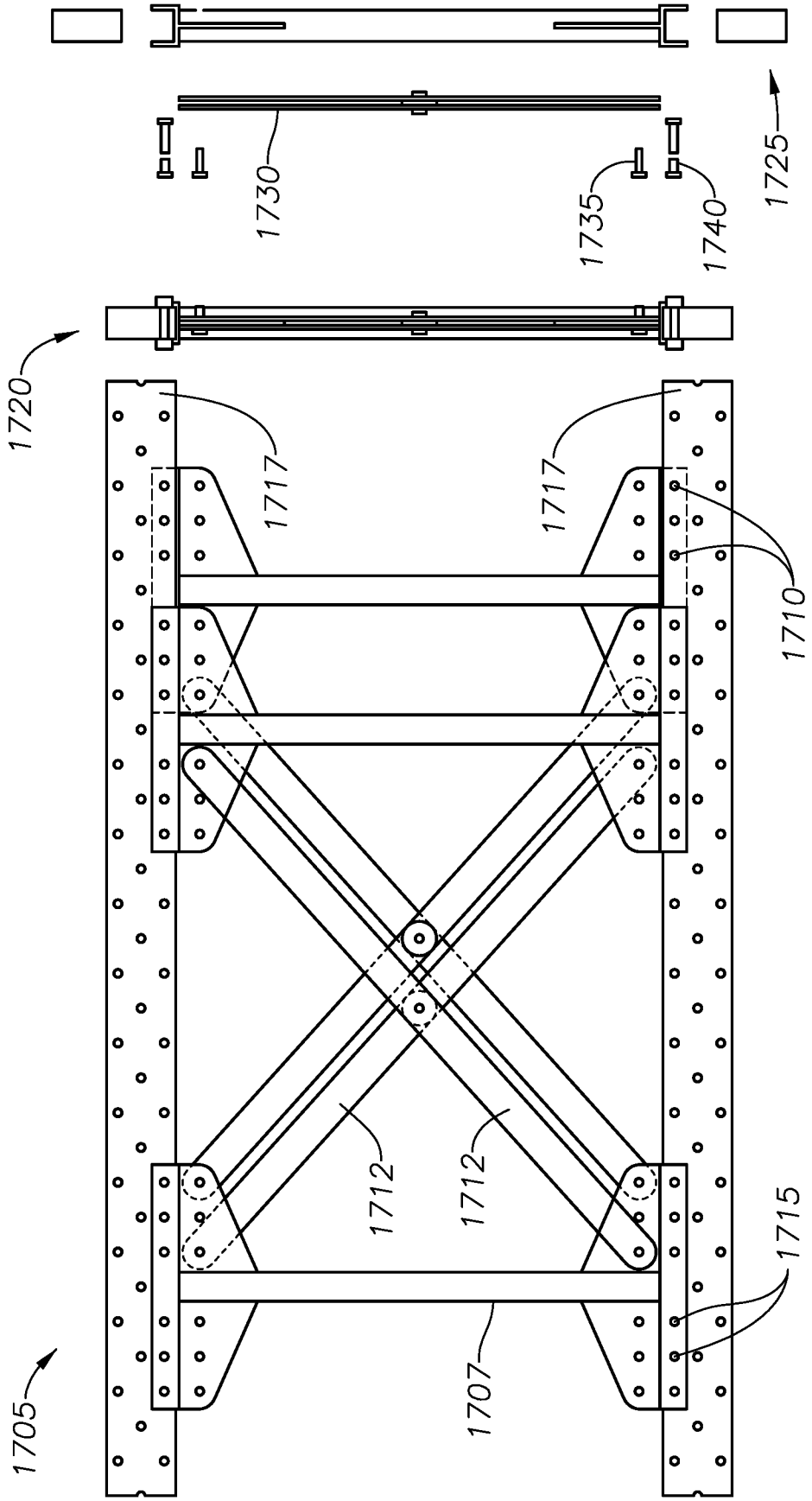
1730
1735
1740
1725
1720
1717
1717
1710
1712
1712
1715
1707
1705

FIG. 17

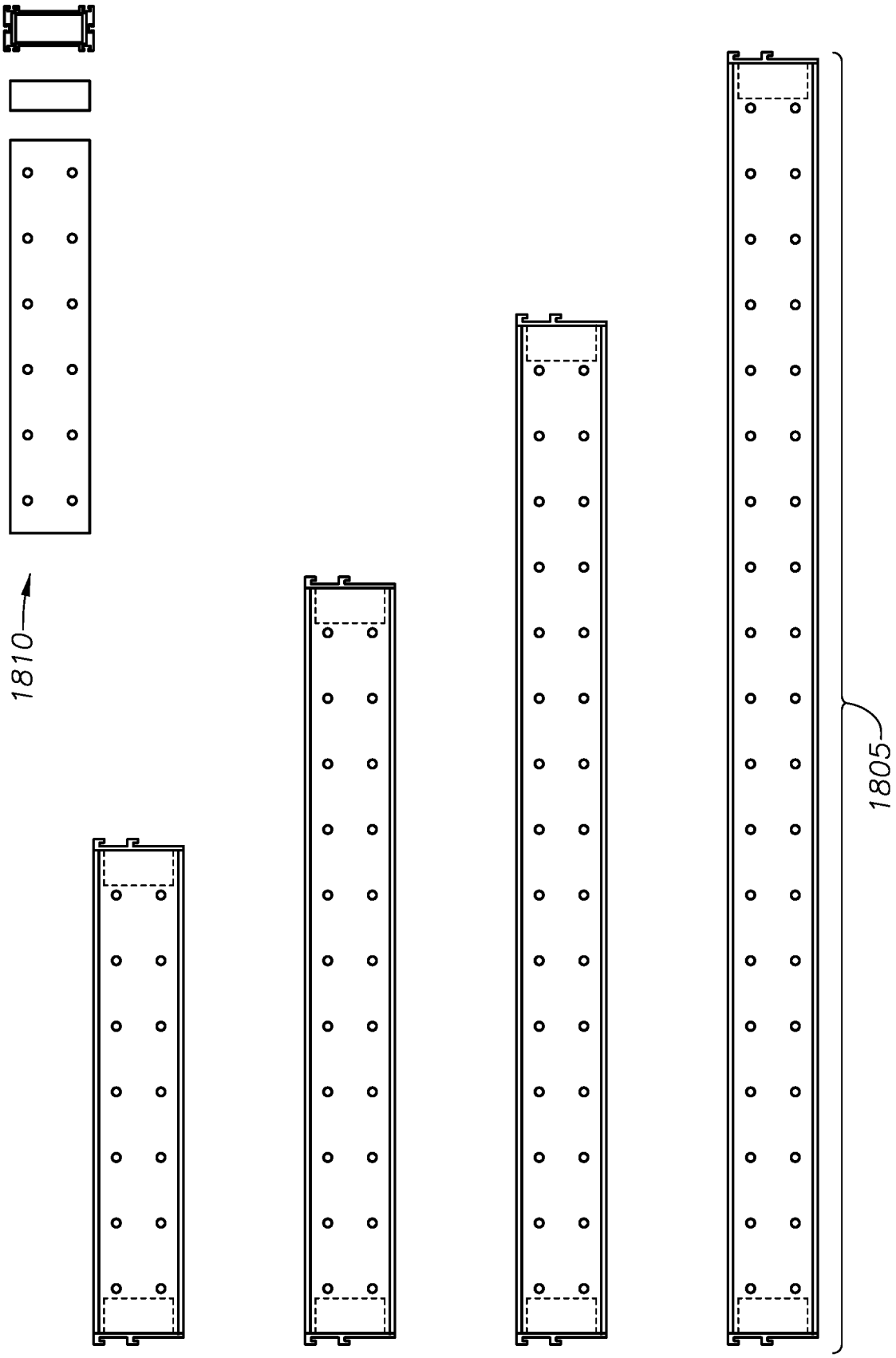

FIG. 18

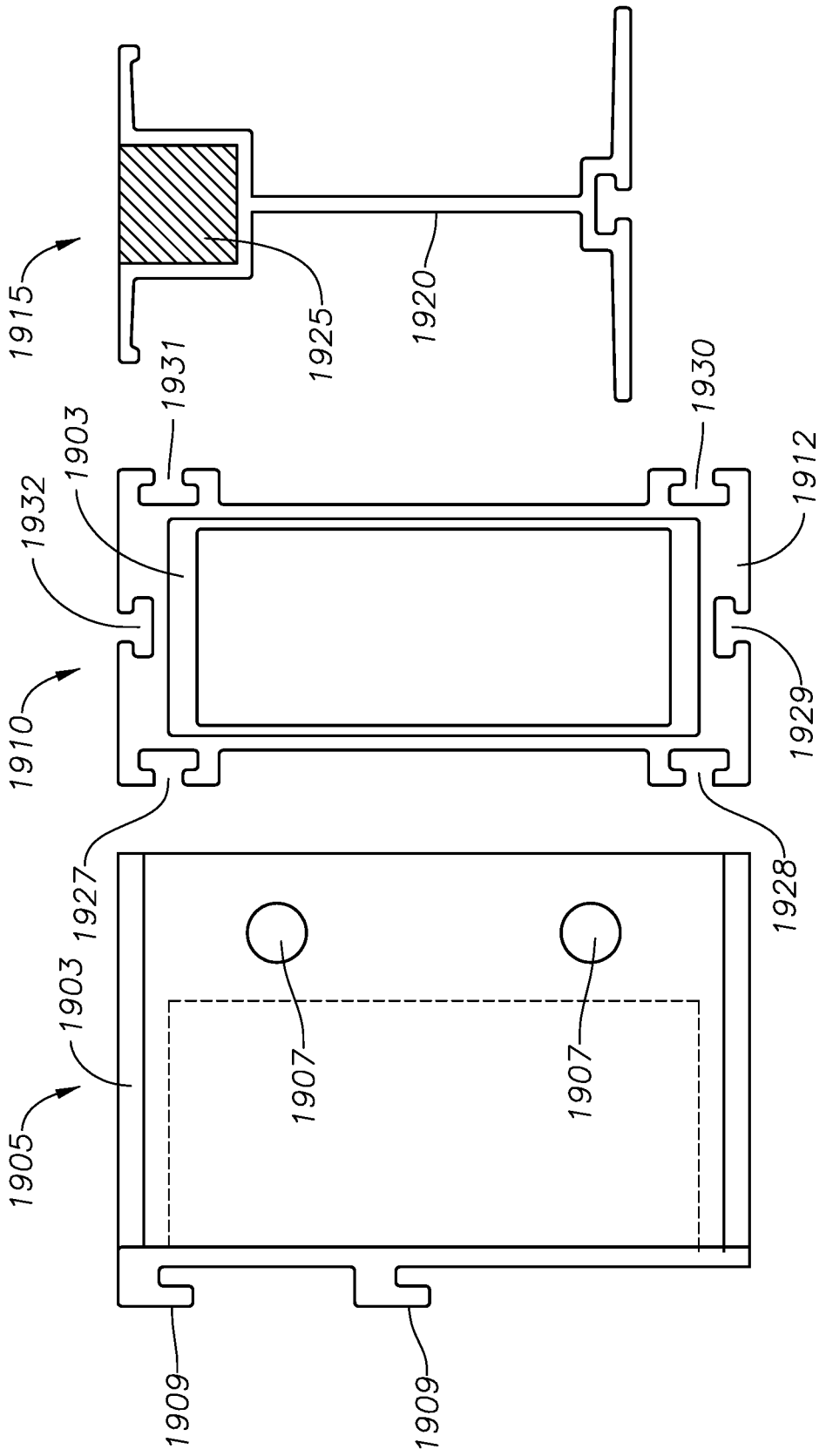
1915
1925
1920
1931
1930
1903
1932
1912
1910
1929
1927
1928
1903
1905
1907
1907
1909
1909

FIG. 19

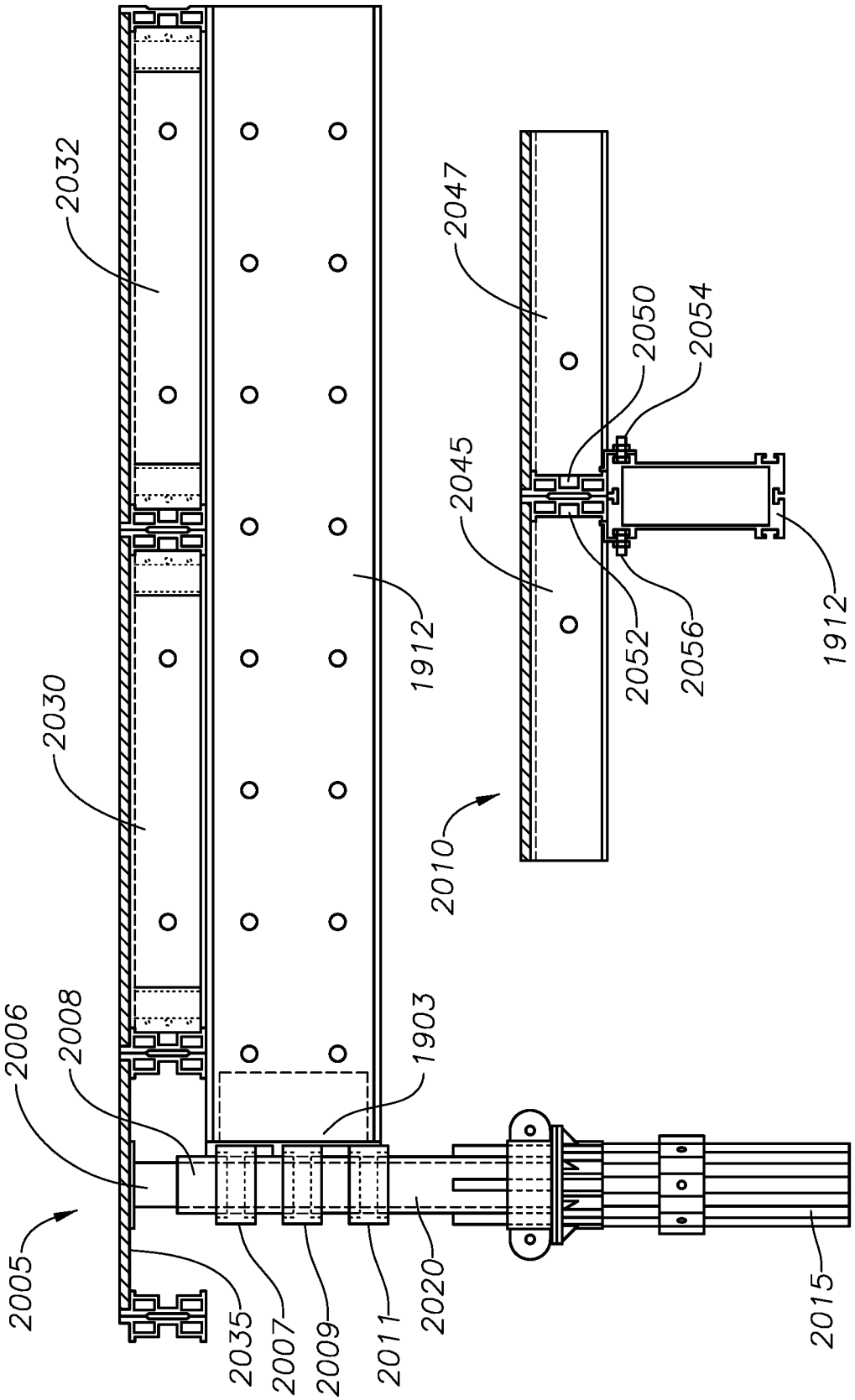
2032
2047
2050
2054
2045
2030
1912
2052
2056
1912
2010
2006
2008
1903
2005
2035
2007
2009
2011
2020
2015

FIG. 20

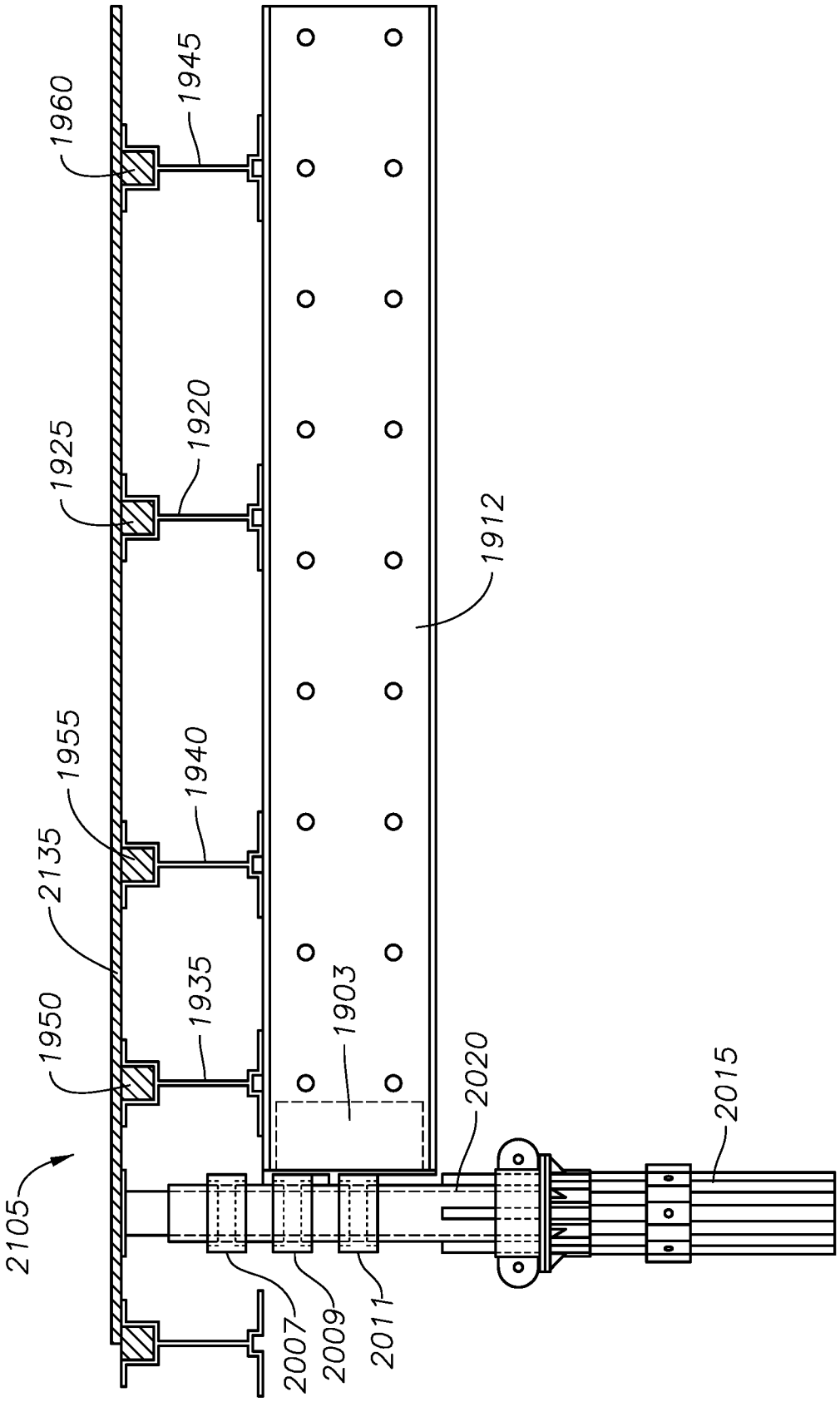
1960
1945
1925
1920
1912
1955
1940
2135
1935
1950
1903
2020
2015
2105
2007
2009
2011

FIG. 21

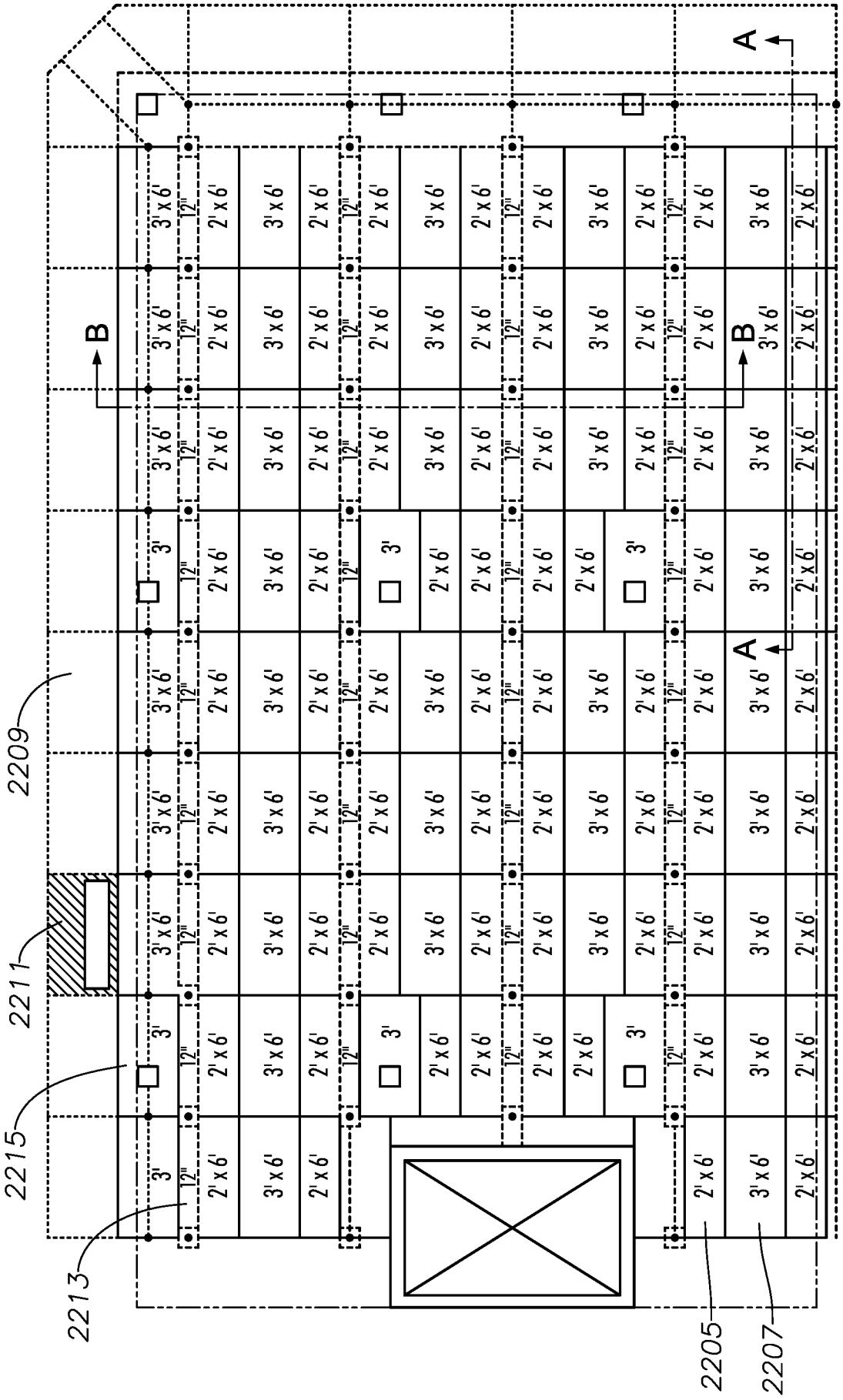

FIG. 22

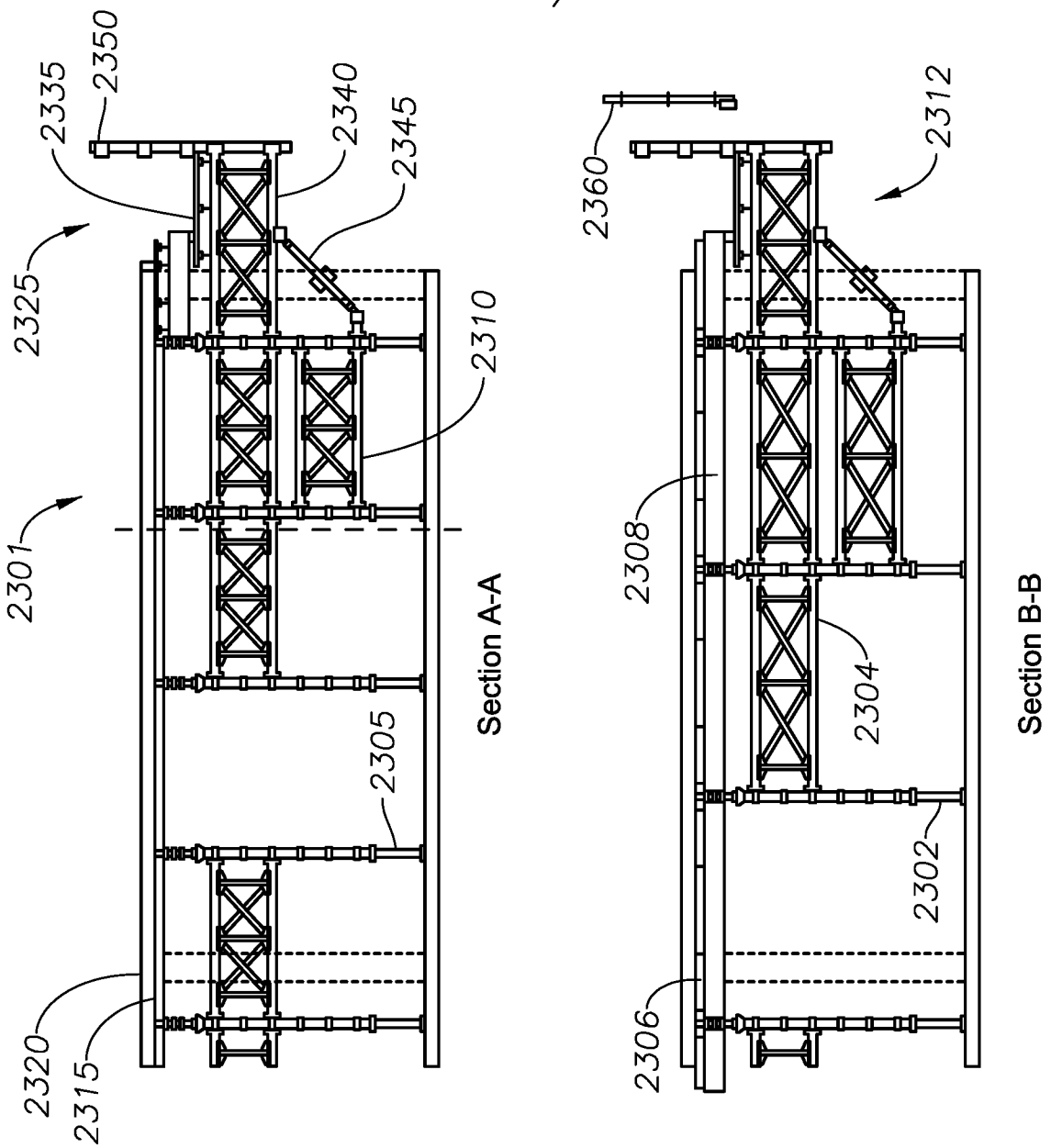
2335
2350
2340
2345
2325
2310
2301
2305
2320
2315
Section A-A
2360
2312
2308
2304
2302
2306
Section B-B

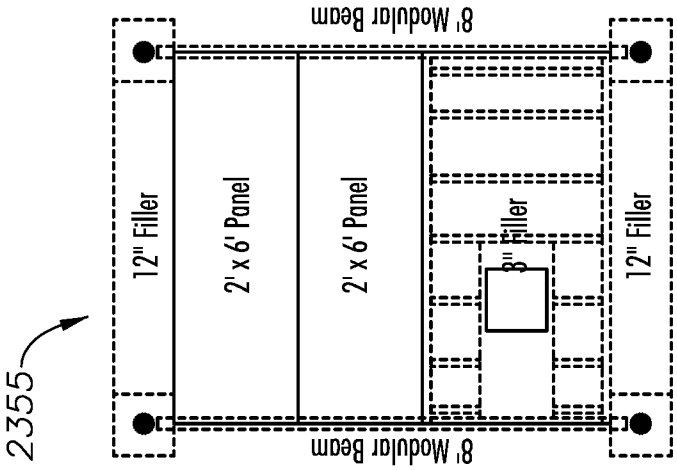
8' Modular Beam
12" Filler
2' x 6' Panel
2' x 6' Panel
8" Filler
12" Filler
8' Modular Beam
2355

FIG. 23

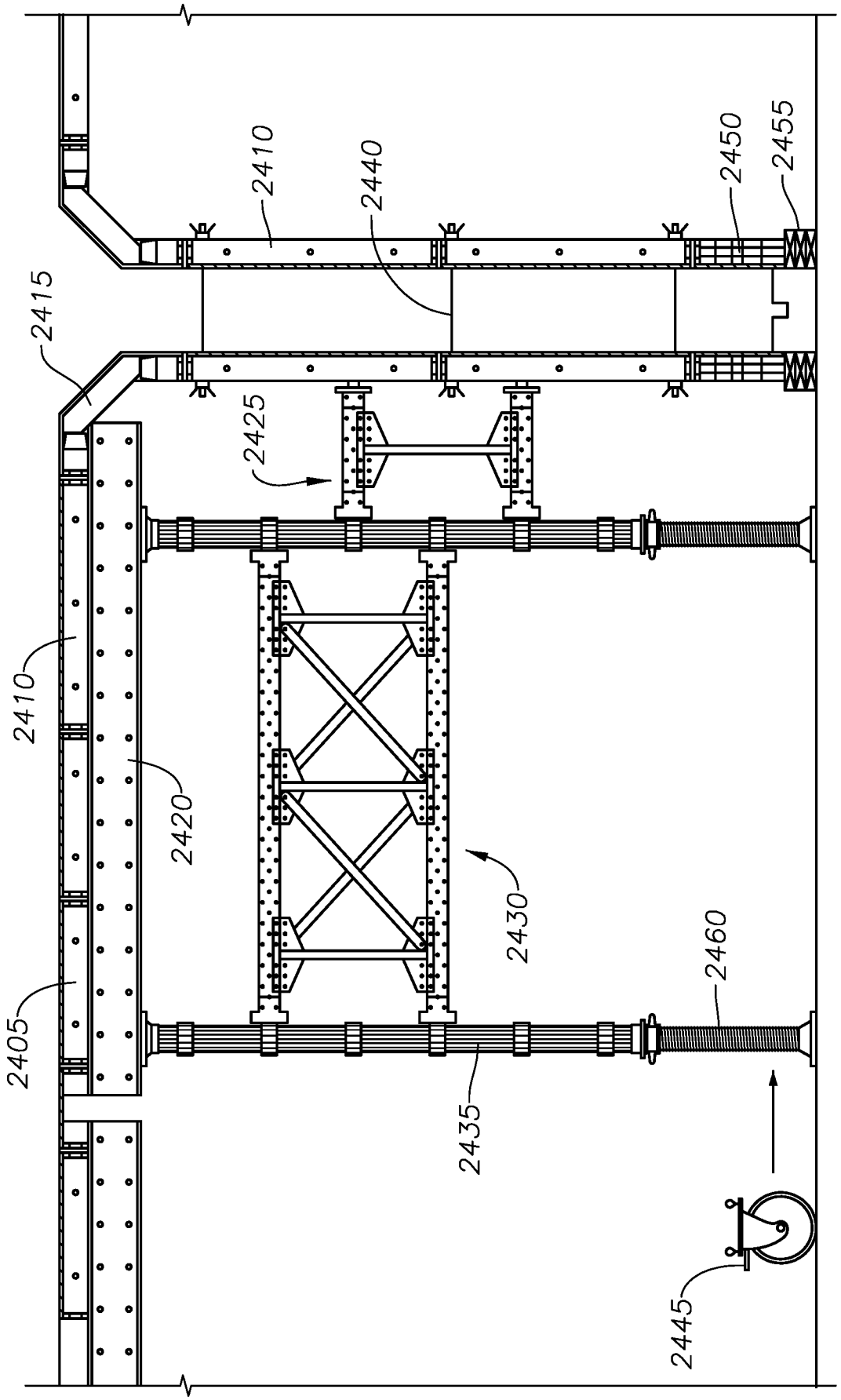
2410
2440
2450
2455
2415
2425
2410
2420
2430
2460
2405
2435
2445

FIG. 24

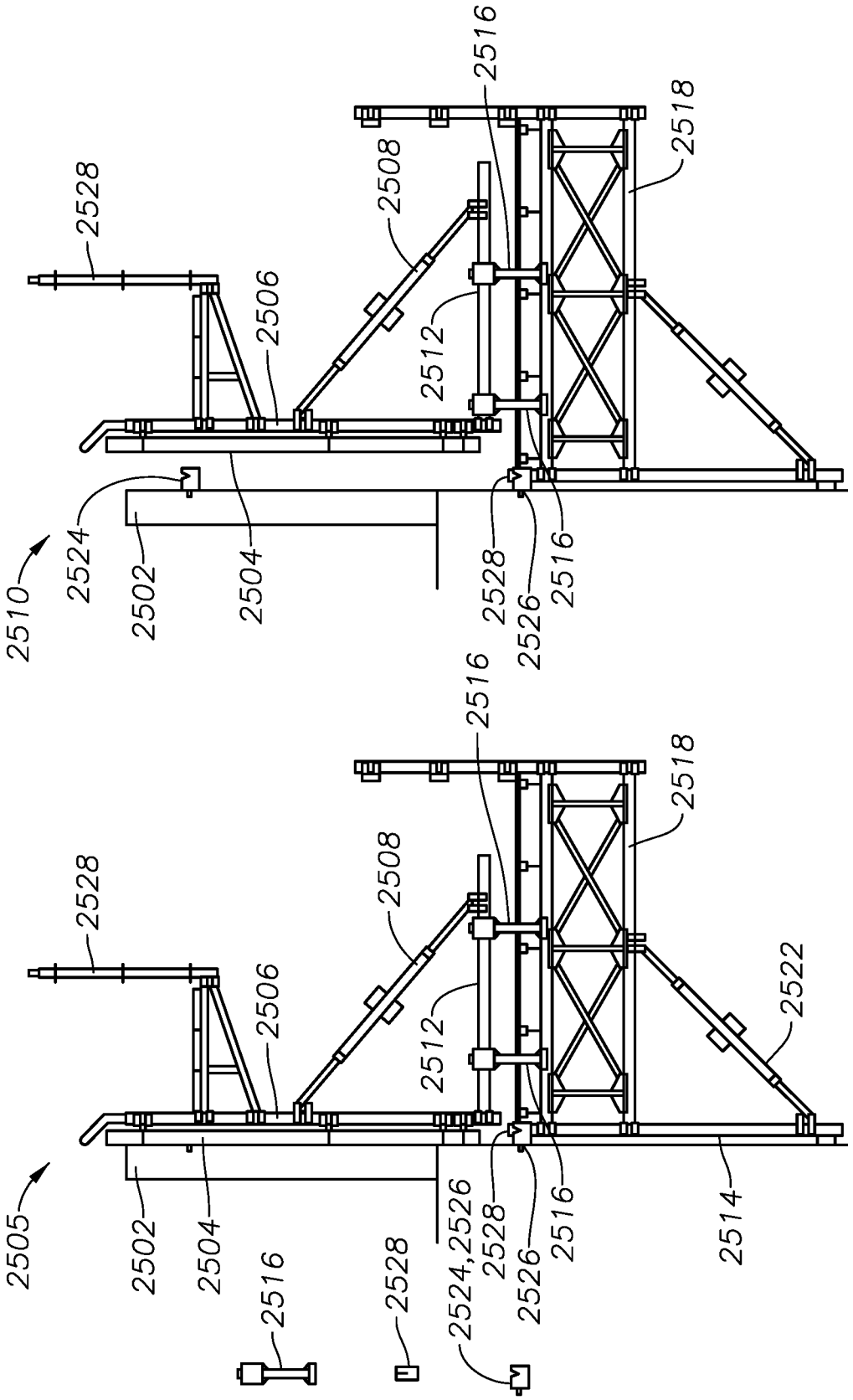
2516
2518
2528
2508
2506
2512
2524
2502
2504
2510
2528
2526
2516
2516
2518
2528
2508
2506
2512
2522
2505
2502
2504
2516
2528
2524,2526
2528
2526
2516
2514

FIG. 25

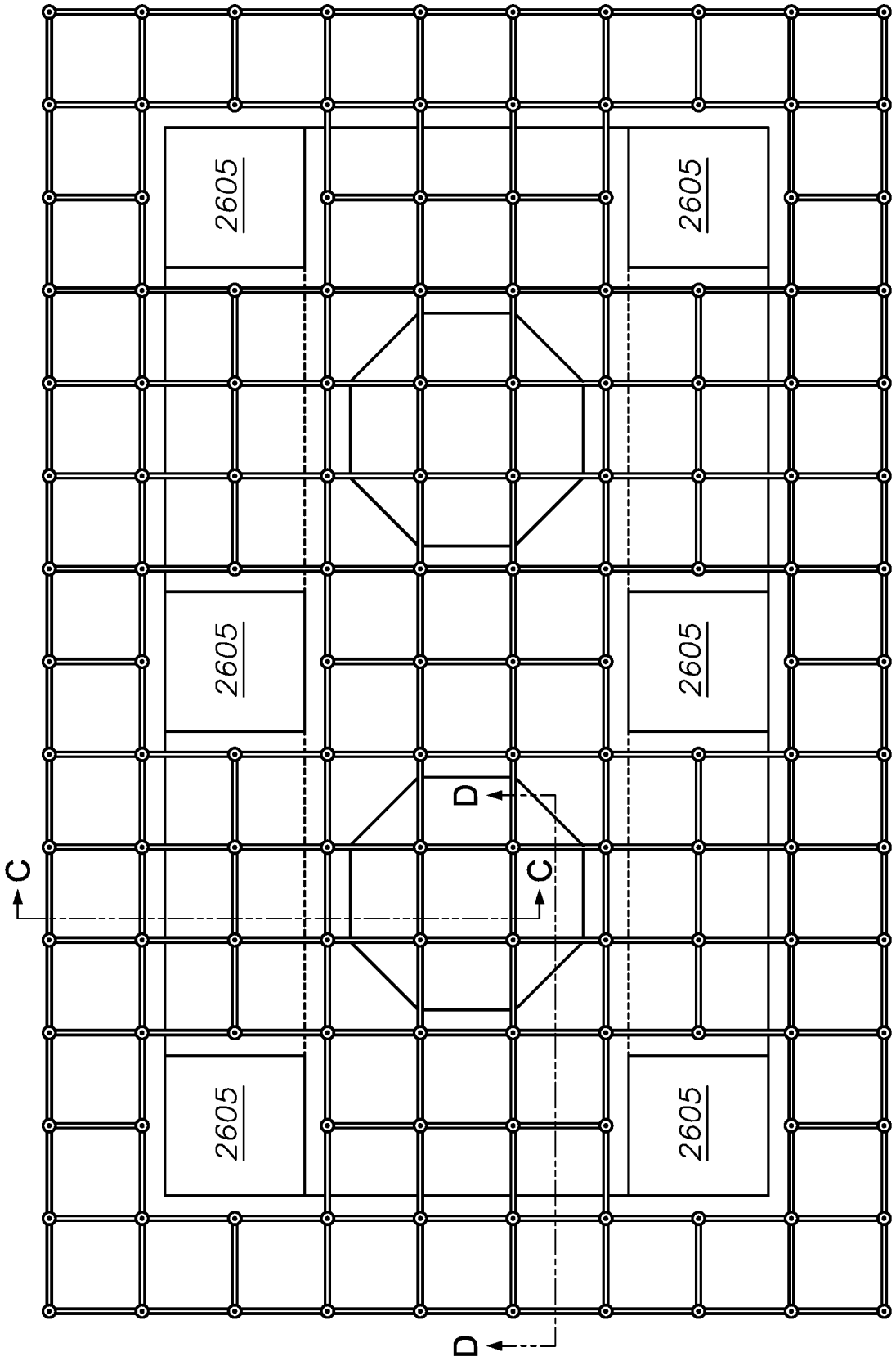

FIG. 26

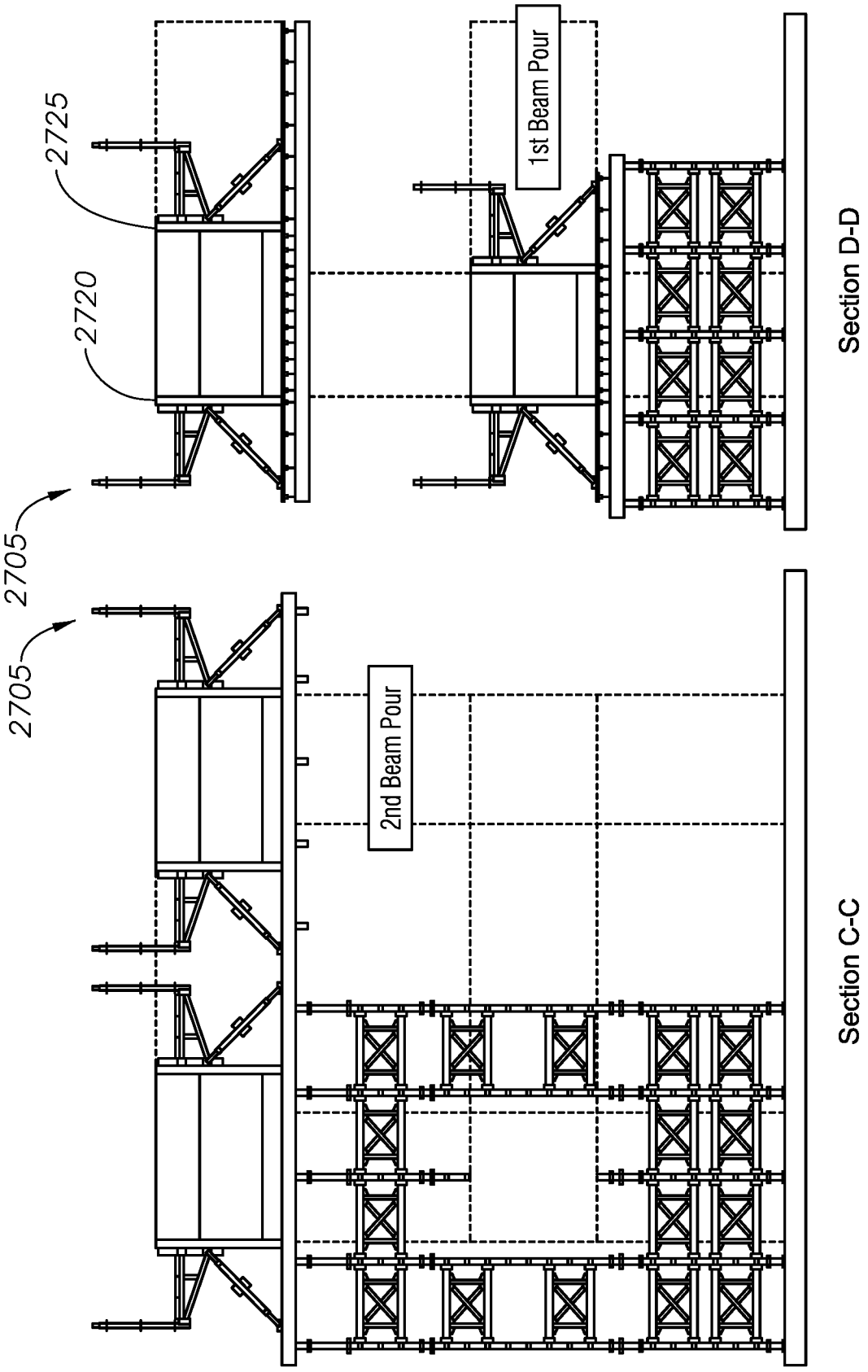
2725
2720
2705
2705
1st Beam Pour
2nd Beam Pour
Section D-D
Section C-C

FIG. 27

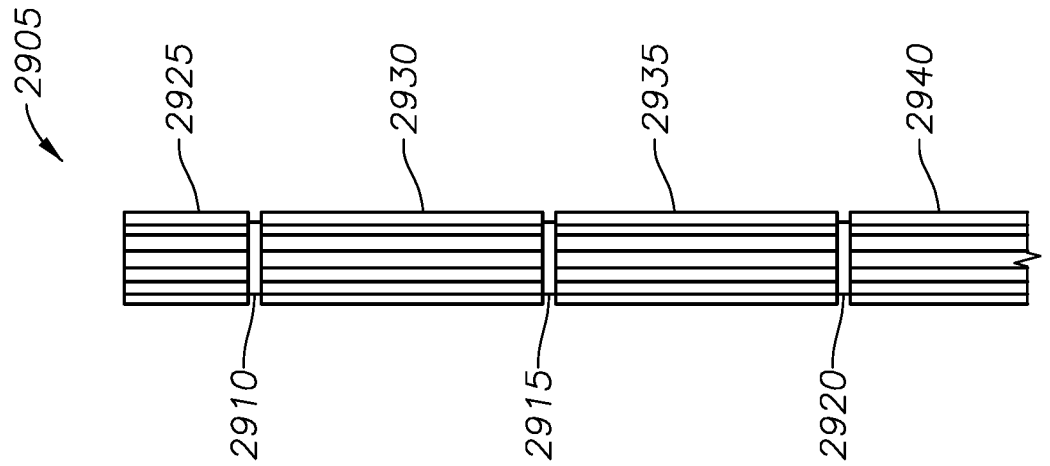
2905
2925
2930
2935
2940
2910
2915
2920

FIG. 29

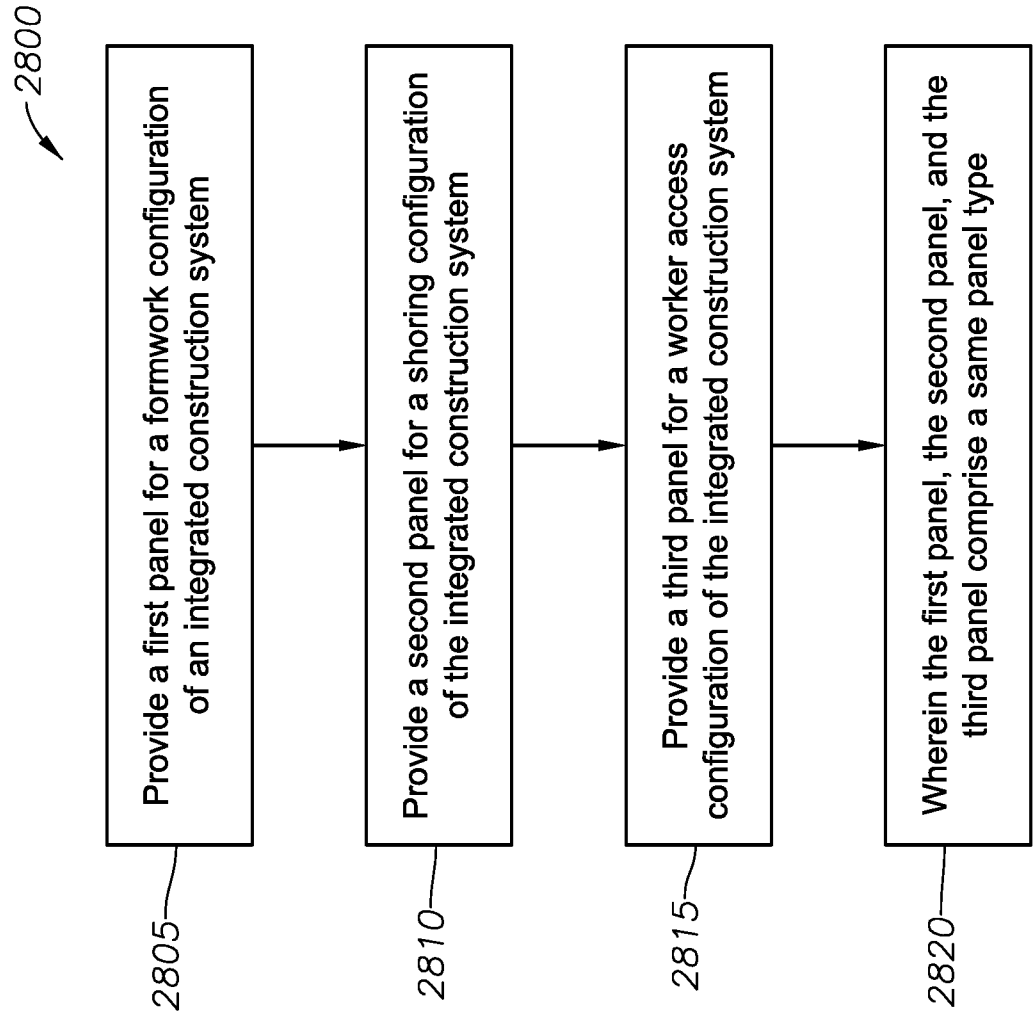
2800
Provide a first panel for a formwork configuration of an integrated construction system
Provide a second panel for a shoring configuration of the integrated construction system
Provide a third panel for a worker access configuration of the integrated construction system
Wherein the first panel, the second panel, and the third panel comprise a same panel type
2805
2810
2815
2820

FIG. 28

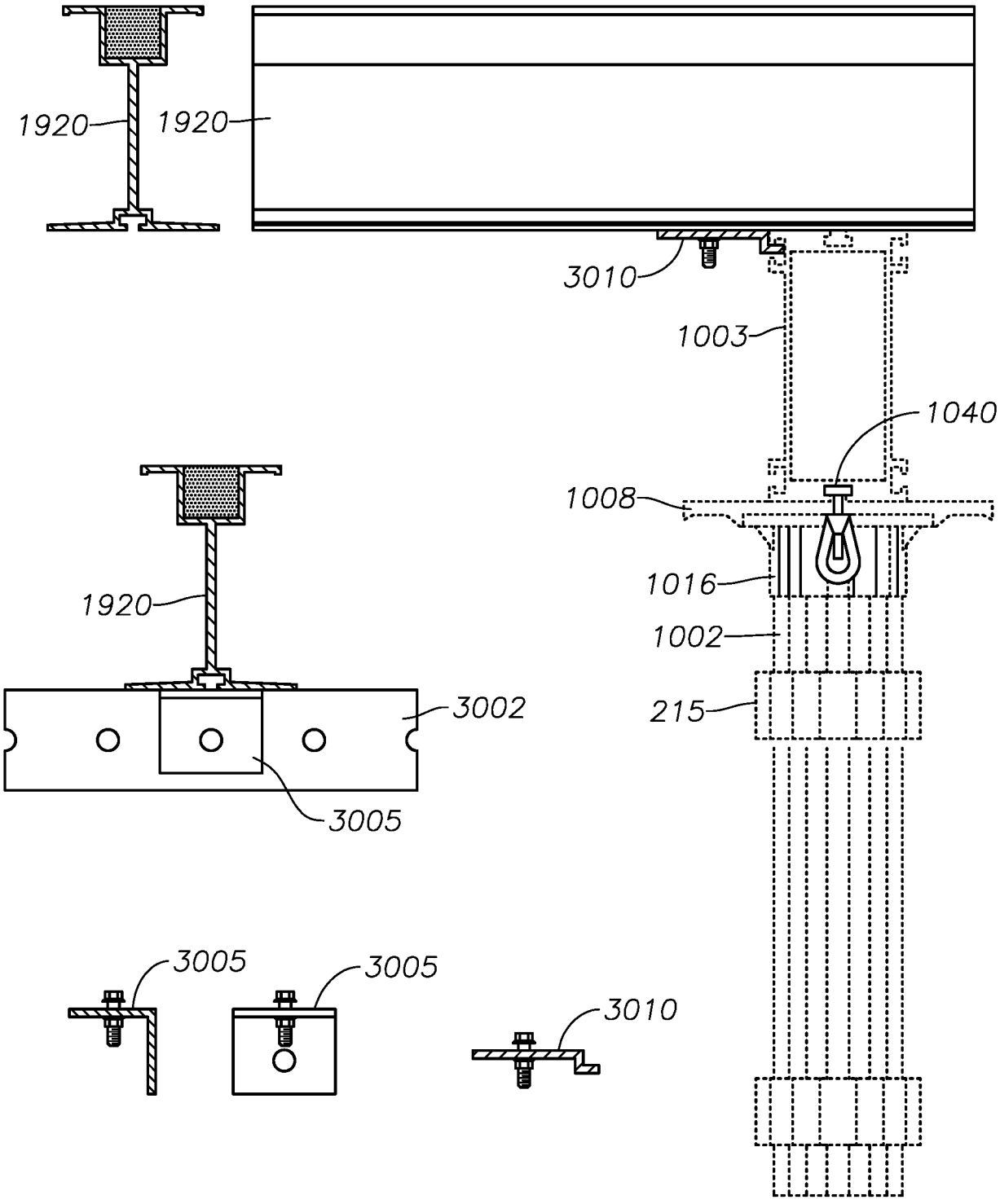
1920
1920
3010
1003
1040
1008
1016
1002
215
1920
3002
3005
3005
3005
3010

FIG. 30

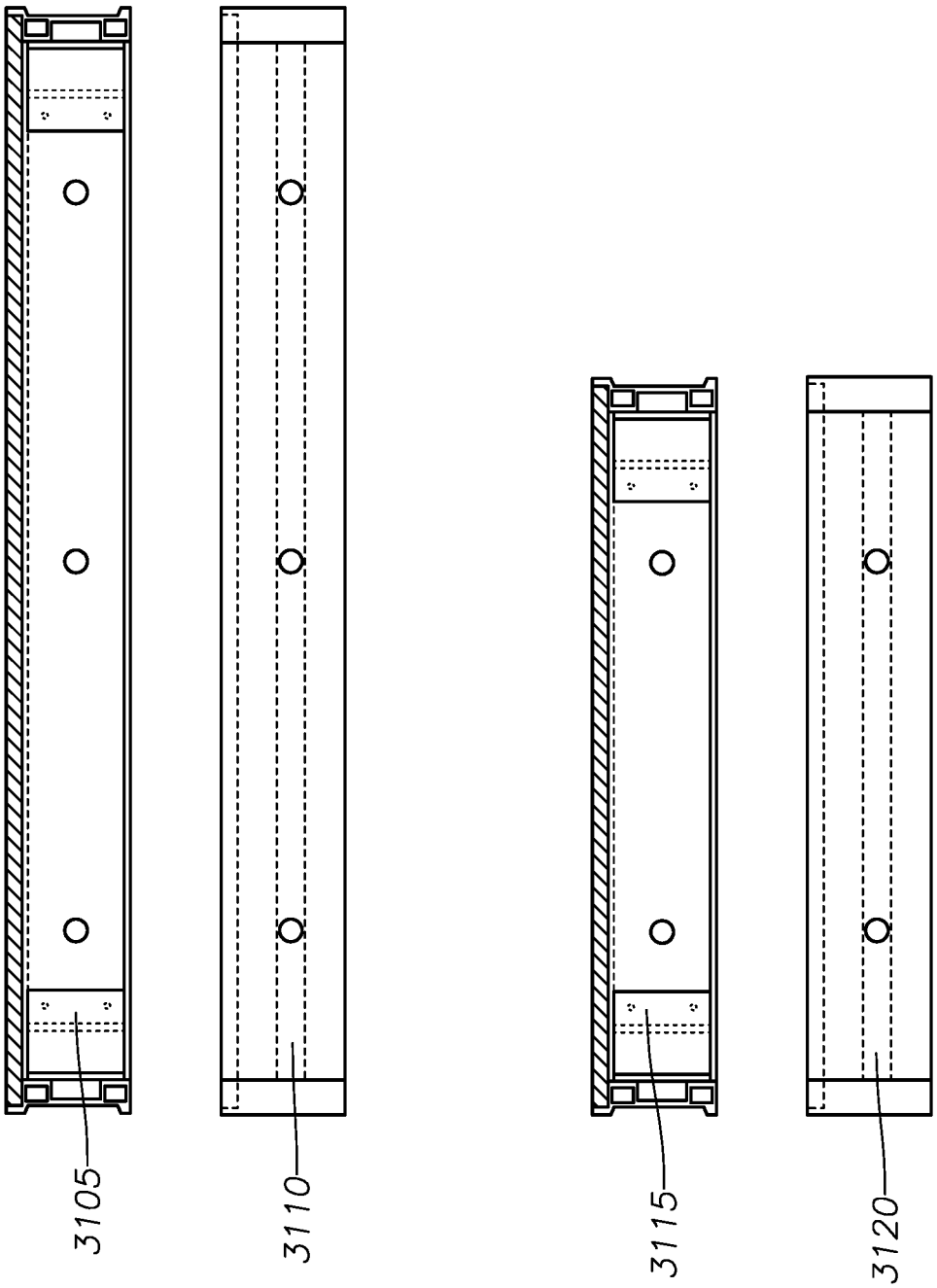

FIG. 31

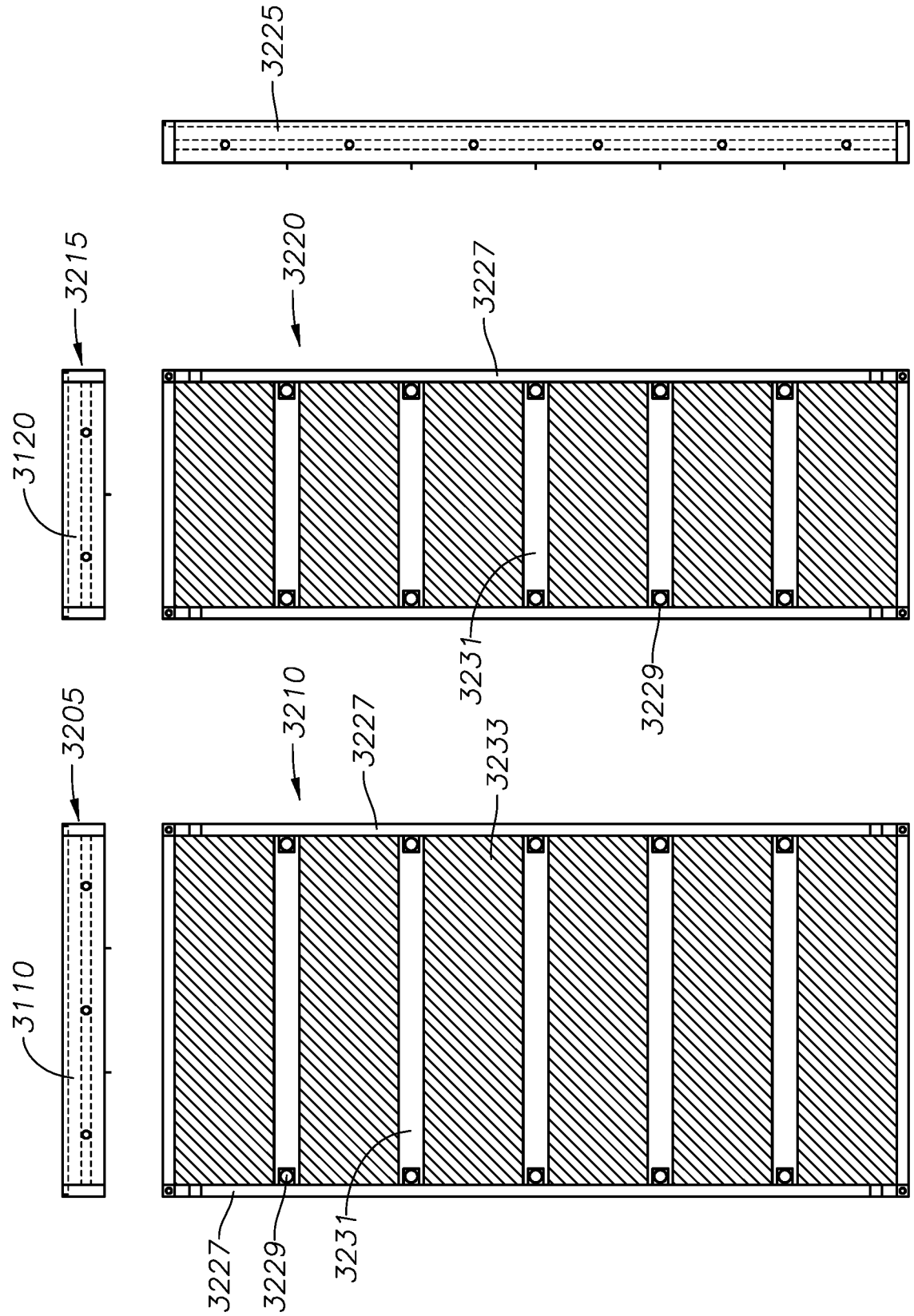
3225
3215
3220
3227
3120
3231
3229
3205
3210
3227
3233
3110
3227
3229
3231

FIG. 32

INTERNATIONAL SEARCH REPORT

International application No.
PCT/US2018/066256

A. CLASSIFICATION OF SUBJECT MATTER

E04G 25/04(2006.01)i, E04G 11/50(2006.01)i, E04G 9/04(2006.01)i, E04G 17/14(2006.01)i, E04G 17/00(2006.01)i, E04G 21/32(2006.01)i, E04G 9/06(2006.01)i, E04G 11/06(2006.01)i

According to International Patent Classification (IPC) or to both national classification and IPC

B. FIELDS SEARCHED

Minimum documentation searched (classification system followed by classification symbols)
E04G 25/04; B28B 7/22; E04G 1/12; E04G 11/00; E04G 11/02; E04G 11/48; E04G 17/04; E04H 12/00; E04G 11/50; E04G 9/04; E04G 17/14; E04G 17/00; E04G 21/32; E04G 9/06; E04G 11/06

Documentation searched other than minimum documentation to the extent that such documents are included in the fields searched
Korean utility models and applications for utility models
Japanese utility models and applications for utility models

Electronic data base consulted during the international search (name of data base and, where practicable, search terms used)
eKOMPASS(KIPO internal) & Keywords: formwork, shoring, panel, construction, worker access, aluminum, post, bracing, assembly, strut, modular

C. DOCUMENTS CONSIDERED TO BE RELEVANT

Category*	Citation of document, with indication, where appropriate, of the relevant passages	Relevant to claim No.
Y	US 5150557 A (GREGORY, ROBERT K.) 29 September 1992 See column 4, line 30 - column 5, line 3, column 6, lines 15-19 and figures 1, 4.	1-13,20
A		14-19
Y	US 2012-0025058 A1 (FLOREANI et al.) 02 February 2012 See paragraph [0047].	1-13,20
Y	US 5078360 A (SPERA, VITTORIO) 07 January 1992 See column 2, lines 53-57 and figure 1.	3
Y	GB 1465950 A (DREISKAEMPER GMBH.) 02 March 1977 See page 1, lines 84-85.	6
A	EP 0408209 A2 (GKN KWIKFORM LIMITED) 16 January 1991 See column 3, line 55 - column 4, line 17 and figure 1.	1-20

☐ Further documents are listed in the continuation of Box C.

☒ See patent family annex.

* Special categories of cited documents:
"A" document defining the general state of the art which is not considered to be of particular relevance
"E" earlier application or patent but published on or after the international filing date
"L" document which may throw doubts on priority claim(s) or which is cited to establish the publication date of another citation or other special reason (as specified)
"O" document referring to an oral disclosure, use, exhibition or other means
"P" document published prior to the international filing date but later than the priority date claimed
"T" later document published after the international filing date or priority date and not in conflict with the application but cited to understand the principle or theory underlying the invention
"X" document of particular relevance; the claimed invention cannot be considered novel or cannot be considered to involve an inventive step when the document is taken alone
"Y" document of particular relevance; the claimed invention cannot be considered to involve an inventive step when the document is combined with one or more other such documents,such combination being obvious to a person skilled in the art
"&" document member of the same patent family

Date of the actual completion of the international search	Date of mailing of the international search report
10 April 2019 (10.04.2019)	**11 April 2019 (11.04.2019)**

Name and mailing address of the ISA/KR
International Application Division
Korean Intellectual Property Office
189 Cheongsa-ro, Seo-gu, Daejeon, 35208, Republic of Korea
Facsimile No. +82-42-481-8578

Authorized officer
HWANG, Chan Yoon
Telephone No. +82-42-481-3347

INTERNATIONAL SEARCH REPORT

Information on patent family members

International application No.
PCT/US2018/066256

Patent document cited in search report	Publication date	Patent family member(s)	Publication date
US 5150557 A	29/09/1992	None	
US 2012-0025058 A1	02/02/2012	AU 2010-213342 A1	29/09/2011
		AU 2010-213342 B2	19/10/2017
		EP 2396155 A1	21/12/2011
		EP 2396155 A4	30/10/2013
		JP 2012-517361 A	02/08/2012
		US 2013-0248682 A1	26/09/2013
		US 2015-0083889 A1	26/03/2015
		US 9796109 B2	24/10/2017
		WO 2010-091452 A1	19/08/2010
		ZA 201106563 B	27/06/2012
US 5078360 A	07/01/1992	AT 112355 T	15/10/1994
		AU 1991-04191 A	24/07/1991
		CA 2006575 A1	22/06/1993
		EP 0507786 A1	14/10/1992
		EP 0507786 B1	28/09/1994
		WO 91-10028 A1	11/07/1991
GB 1465950 A	02/03/1977	AT 332097 B	10/09/1976
		DE 2323532 A1	28/11/1974
		FR 2228926 A1	06/12/1974
		NL 7406322 A	12/11/1974
EP 0408209 A2	16/01/1991	DD 296525 A5	05/12/1991
		DD 296526 A5	05/12/1991
		GB 2234005 A	23/01/1991
		GB 2234005 B	07/04/1993
		IE 64215 B1	26/07/1995
		IE 902324 A1	16/01/1991