March 11, 1924. 1,486,506

K. W. WAGNER

STABILIZING OSCILLATION GENERATORS

Filed June 28, 1923

Fig. 1.

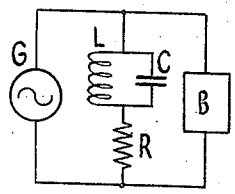


Fig. 2.

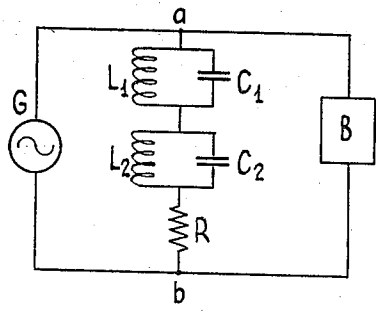


Fig. 3.

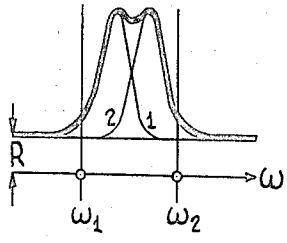


Fig. 4.

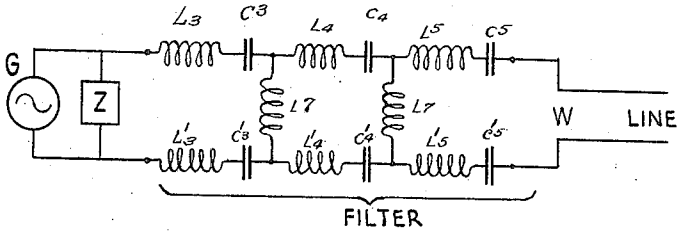


Inventor
KARL WILLY WAGNER

By his Attorney
Ira J. Adams

Patented Mar. 11, 1924. 1,486,506

# UNITED STATES PATENT OFFICE.

KARL WILLY WAGNER, OF BERLIN, GERMANY, ASSIGNOR TO RADIO CORPORATION OF AMERICA, A CORPORATION OF DELAWARE.

## STABILIZING OSCILLATION GENERATORS.

Application filed June 28, 1923. Serial No. 648,311.

*To all whom it may concern:*

Be it known that I, KARL WILLY WAGNER, a citizen of Germany, and a resident of Hallesches Ufer 12/13, Berlin, S. W. 11, Germany, have invented new and useful Improvements in Stabilizing Oscillation Generators (for which I have filed an application in Germany, Oct. 14, 1921), of which the following is a specification accompanied by drawings.

This invention relates to an arrangement for stabilizing the operation of oscillation generators which are utilized with a tuned or untuned load.

Generators adapted for the production of mechanical, acoustic, electrical, or other oscillations and waves are often used with loads which are tuned to a definite frequency, or else to a more or less narrowly limited frequency range, this plan being either followed for the purpose of utilizing such oscillation generators most efficiently or for the purpose of excluding the transmission to the load or consuming devices of secondary oscillations of the generator. However, in this connection certain difficulties are often encountered due to the reaction of the load upon such oscillation generator, which difficulty among other things manifests itself by an alteration of the frequency produced, the consequence being that the generator ceases to be tuned to the load dealt with, and that it fails to yield its full power. Moreover, such change in the frequency is generally very undesirable.

In accordance with German Patent No. 284,603 the said reaction produced by the tuned load upon the oscillation generator is reduced by the inclusion of resistance in the load whereby the resonance curve of the latter is enlarged; however, the advantage so gained is only realized at the expense of selectivity of the consuming device or load. The same thing holds good of the arrangement described in German Patent No. 298,482 in which the enlargement of the resonance curve is attained by a two-wave characteristic of the load. It has also been suggested to dissyntonize the load with relation to the oscillation generator, but this gives up the advantages realized by the tuning between the load and the generator.

Now, according to the present invention the deviation of the oscillation generator is prevented by providing it with a supplemental load which is external with relation to the syntonized or primary load, a supplemental load is utilized which depends upon the frequency, in such a manner that the supplemental load is low inside the range of the working frequency, while it increases greatly as soon as the frequency departs from the working range in either an upward or downward direction. What is realized thereby is that the total load of the generator is subject to but little change with the frequency, the generator being by this means rid of its tendency to deviate with relation to the load.

The invention is illustrated in the accompanying diagrams in which

Fig. 1 is a diagrammatic representation of a circuit embodying the invention.

Fig. 2 is a modification of Fig. 1 in which the supplemental load is dependent upon the frequency range of the generator.

Fig. 3 is a curve illustrating the characteristics of the arrangement shown in Fig. 2; and

Fig. 4 is an arrangement in which the load is substantially independent of the frequency.

Referring to Fig. 1, G is an electric oscillation generator which carries a syntonized or primary load circuit B.

The supplemental load consists of an inductance L and a capacity C connected in parallel therewith, the circuit LC being tuned to exclude the working frequency, hence, for this frequency it possesses a very high impedance and it takes as a consequence only a very small current. Above and below the tuning frequency, the impedance of the said circuit is much lower so that the generator in the presence of a deviation of the frequency from its normal value becomes subject to a large supplemental load which increases with the departure from such frequency. By appropriate adjustment or proportioning of resistance R or damping of the circuit LC, the value of the supplemental load can be regulated. The effect of the damping is to flatten the resonance curve of the tuned circuit LC and to increase the energy losses in the supplemental load which would be zero in the ideal case where the inductance has no resistance and the condenser has no

losses. By the proper selection of the ratio L : C the frequency deviation can be adjusted within certain limits, within which the supplemental load will become effective or operative. Resistance R can be included wholly or partly inside circuit LC itself.

In the claims a supplemental load having resistance or which introduces considerable energy losses when current flows therethrough is designated by the term "damped."

The manner in which stabilization occurs in this as well as in the other modifications may be illustrated by an example. Assume the generator G to be an alternator operating at a frequency of 50,000 cycles delivering current to tuned or untuned load B at this frequency and assume a change in the load to occur which tends to decrease the speed of the alternator with the result that the frequency tends to decrease correspondingly. It then results that there is a tendency for the load to receive a frequency lower than that at which it should be operated. This tendency for a decrease in frequency is prevented by tuning the circuit LC so that it excludes the frequency of 50,000. If the frequency departs from 50,000 at which the circuit LC is a very high or approaches an infinite impedance, its impedance rapidly decreases and tends to pass a heavy current therethrough. This would result in a greatly increased total load on the generator.

It is well-known, however that a generator will operate in such a manner that it will tend to work at the frequency or under the conditions at which the minimum load is imposed thereon. This is true regardless of whether the load is principally reactance or largely resistance. It therefore follows that the frequency will not reach a value at which the circuit LC imposes a heavy load on the generator and the latter will therefore maintain a frequency close to 50,000. The range will depend to a certain extent on the resistance of the circuit LC which tends to flatten the resonance curve.

There are cases where it is demanded that the supplemental load should become effective only upon the working frequency departing from a definite range included within two limiting values $\omega 1$ and $\omega 2$. As long as this range is relatively narrow, an arrangement as depicted in Fig. 1 will prove adequate, circuit LC being tuned to a value intermediate between $\omega 1$ and $\omega 2$. However, to obtain a rapid increase of load at the limiting values $\omega 1$ and $\omega 2$ when there is a wider range between these a convenient arrangement is to connect two, or if necessary, more circuits L1C1, L2L2, in series, as indicated in Fig. 2. These circuits are dissyntonized with relation to each other. Fig. 3 illustrates and explains the operation of this scheme. Curve 1 illustrates the dependency of the impedance of the circuit L1C1 on the frequency; curve 2 the same condition with respect of circuit L2C2. The total impedance of the supplemental load contained between points $a$ and $b$ results as the sum of the partial impedances and is illustrated in Fig. 3 by the heavy curve. The same is high inside the frequency range $\omega 1$, $\omega 2$, and as a result the supplemental load is low while at the limiting values of the range it drops rapidly to the desired low value so that a large supplemental load is applied.

The operation of this arrangement is similar to that of Fig. 1. By this method a convenient means is provided for flattening the resonance curve of the supplemental load to enable it to be effective over a wider range of frequencies.

The arrangements as hereinbefore described can be used to advantage also in cases where the useful load itself is independent of the frequency, but where between the generator and the useful load an arrangement selective in action is disposed which is intended to prevent undesirable secondary oscillations of the generator from getting into the consumer or load. This results in the total load having the combined properties of the filter system and the useful load which latter is independent of frequency. That is, the load on the generator then acts as though it were substantially tuned on account of the selectivity or tuning of the filter system. An arrangement of this sort is illustrated by way of example in Fig. 4, the consumer consisting here of a long line which serves for the transmission of the waves set up by the generator, the line being assumed to be a consumer possessing a practically constant impedance $w$. The line is in the case before us provided with a chain filter connected in series with it, the purpose of the same being to exclude secondary oscillations set up by the generator from the line.

The filter which may be of any suitable well-known type consisting for example of series tuned circuits L3C3; L4C4; L5C5; $L'_3$ $C'_3$; $L'_4$ $C'_4$; $L'_5$ $C'_5$; adapted to readily pass the working frequency. An inductance $L_6$ connected in shunt between $C_1$ and $C'_1$ and an inductance $L_7$ in shunt with the series tuned circuits are adapted to shunt the secondary frequencies.

The consuming circuit made up of the chain filter and line possesses the properties of a markedly selective load on the oscillation generator, and this occasions operating difficulties of the kind mentioned at the outset; but these are avoided by the provision of a supplement load Z of the kind previously described.

Having described my invention what I claim is:—

1. An arrangement for stabilization of oscillation generators comprising in combination an oscillation generator adapted to operate within a particular working frequency range, a primary load connected thereto which is substantially independent of said working frequency; a filter connected between said load and said oscillation generator for passing the working frequency and excluding secondary harmonic or undesired frequencies produced by said generator whereby the load imposed on said generator assumes the characteristics of a load tuned to the working frequency, and a supplemental stabilizing load connected to said generator, said supplemental load consisting of an oscillation circuit for substantially excluding the working frequency and imposing an increased supplemental load on the generator at nearby frequencies.

2. An arrangement for stabilization of oscillation generators comprising in combination an oscillation generator adapted to operate within a particular working frequency range, a primary load connected thereto which is substantially independent of said working frequency; a filter connected between said load and said oscillation generator for passing the working frequency and excluding secondary harmonic or undesired frequencies produced by said generator whereby the load imposed on said generator assumes the characteristics of a load tuned to the working frequency and a supplemental stabilizing load connected to said generator between the filter and the generator, said supplemental load consisting of an oscillation circuit for substantially excluding the working frequency and imposing an increased supplemental load on the generator at nearby frequencies.

KARL WILLY WAGNER.