Sept. 25, 1956 E. J. SIGLER 2,764,119

COMBINED OUTBOARD MOTOR MOUNT AND FUEL TANK

Filed Oct. 28, 1955

2 Sheets-Sheet 1

Fig. 1.

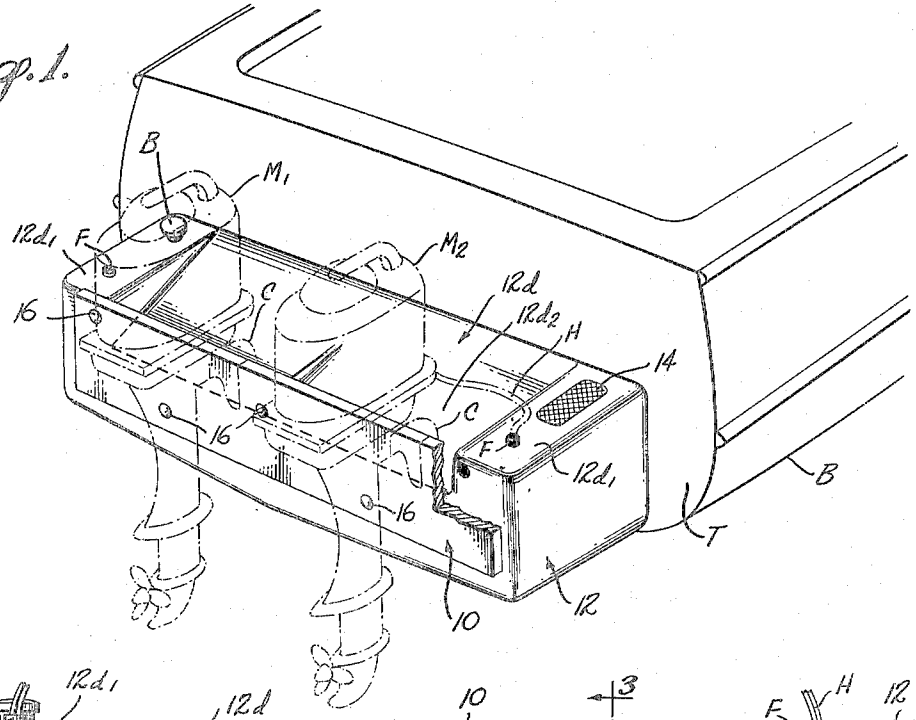

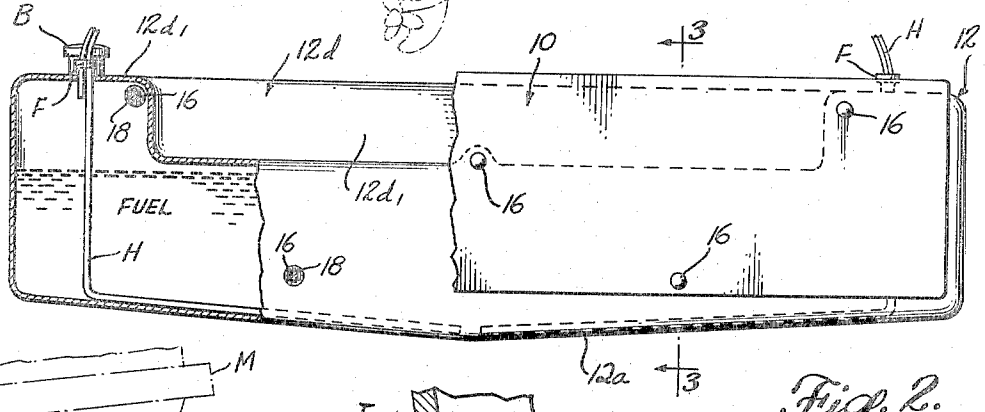

Fig. 2.

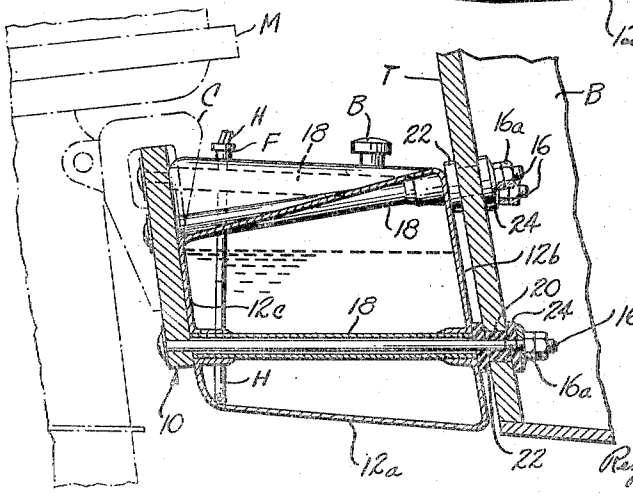

Fig. 3.

INVENTOR.
ERNEST J. SIGLER

BY
Reynolds, Beach & Christensen

ATTORNEYS

Sept. 25, 1956 E. J. SIGLER 2,764,119

COMBINED OUTBOARD MOTOR MOUNT AND FUEL TANK

Filed Oct. 28, 1955 2 Sheets-Sheet 2

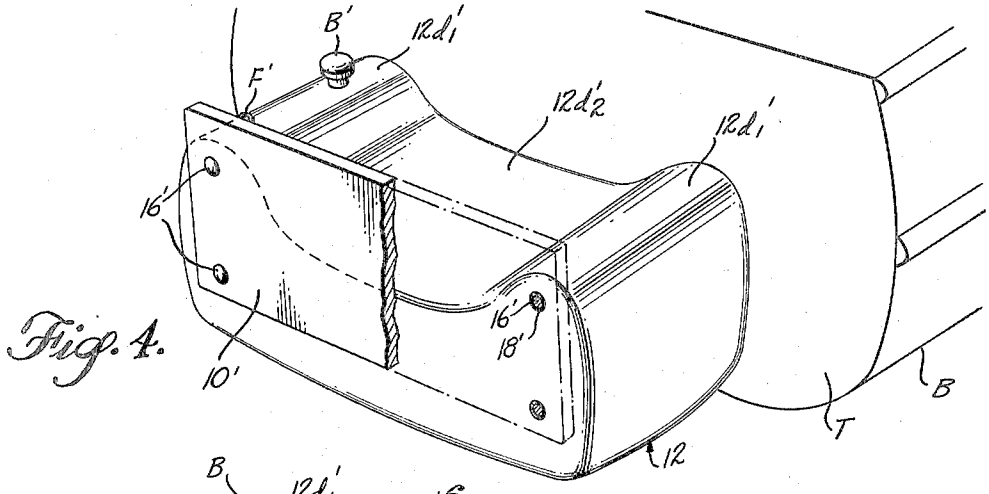

Fig. 4.

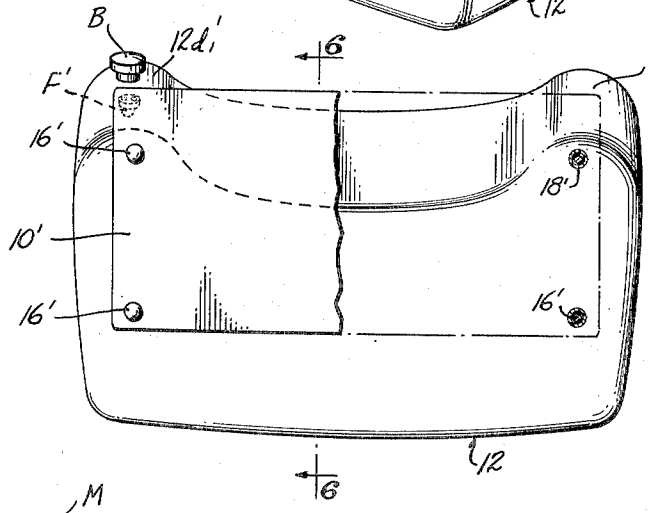

Fig. 5.

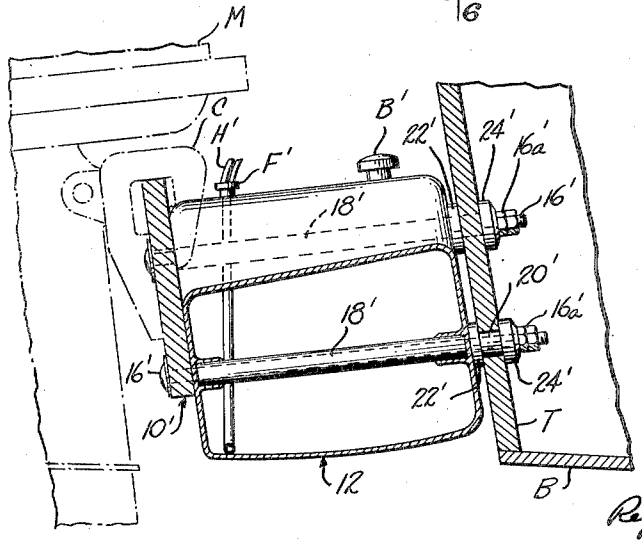

Fig. 6.

INVENTOR.
ERNEST J. SIGLER

BY
Reynolds, Bland & Christensen

ATTORNEYS

United States Patent Office 2,764,119 Patented Sept. 25, 1956

2,764,119

COMBINED OUTBOARD MOTOR MOUNT AND FUEL TANK

Ernest J. Sigler, Olympia, Wash.

Application October 28, 1955, Serial No. 543,386

14 Claims. (Cl. 115—17)

This invention relates to a new and improved attachment for outboard motor cruisers and more specifically concerns a combined outboard motor mount and fuel tank arrangement having certain features and advantages to be described hereinbelow. The invention is herein illustratively described by reference to the presently preferred forms thereof, but it will be recognized by those skilled in the art that certain modifications and changes may be made therein without departing from the essential features of the invention.

Customary outboard motor mounting arrangements are of two types. In the first and most conventional arrangement the outboard motor is mounted directly on the transom board of the boat. In the second arrangement, which has grown recently with the increasing number of larger outboard motor cruisers, the outboard motor is mounted on a bracket which is attached to the transom board of the boat in order primarily to permit the boat to have a high transom without requiring the motor to be mounted too high in relation to the water. In practically all new-type motors fuel tanks separate from the motor are used, and during operation the fuel is conducted to the motor through a rubber hose. The fuel tanks are of portable size and with large motors it is usually necessary to carry a number of tanks of fuel, each adapted for connection to the hose, or each equipped for pouring gasoline into the tank which is connected to the hose. In either event the individual tanks are too small for continuous cruising over a long period of time on one tank of fuel and it is necessary to stop the motor, perhaps at an inconvenient or even dangerous time, in order to replenish the fuel supply. Moreover, there is some danger of fire when fuel is stored and handled in that manner and almost invariably there is some leakage or spillage inside the boat resulting in accumulations of dirt and oil film.

Placing the outboard motor on an outboard bracket secured to the transom board may help to minimize the fire hazard and the problem of dirt and oil film to the extent that any leakage at the motor itself drops overboard, but that is, of course, only a partial solution to the over-all problem. Moreover, the use of a transom bracket creates structural problems in the design of the bracket for supporting large and powerful motors, and the combined weight of the bracket and one or more large motors tends to depress the stern of the boat unduly and, in the case of a sudden throttle-down, tends to cause swamping at the stern. Another problem with conventional bracket-type motor mounts in the impairment of the stern wave from the boat. There is a tendency in such cases for the motor to create a "rooster tail" behind the boat, which represents energy expended to no useful purpose. In addition there is a tendency, greater than normal, for an outboard motor mounted on a transom bracket to unduly elevate the bow of the boat, especially when going on and off a plane. This is apparently due to the increased torque arm at which the propeller thrust acts about the center of buoyancy of

the boat, due to the rearward displacement of the propeller location representing the length of the bracket support projecting from the transom board.

A broad object of the present invention is to provide a novel and improved outboard motor mounting arrangement which largely solves the foregoing problems and has certain other important features and advantages as will become evident herein.

Another and more specific object of the invention is an improved outboard motor mounting means and fuel tank combination permitting the mounting of one or more outboard motors at the desired distance behind the transom of the boat and at the required height in relation to the water line without impairing the performance characteristics of the boat, but in fact actually improving the same. The invention provides means increasing the stem buoyancy of the boat statically and while under power, holding the bow down when the boat goes on and off a plane, preventing a swamping tendency at the stern accompanying a sudden throttle-down of the motor, and minimizing the tendency to develop a "rooster tail" representing energy loss at high speeds. A related object is such a means which also eliminates all possibility of fuel leakage within the boat hull to minimize the usual fire hazards and dirt and sludge accumulations.

Still another related object is such a means providing an inherently strong and rigid outboard motor mount and fuel tank arrangement of minimum weight and maximum strength, as well as one which may be readily shock-mounted in relation to the boat hull to minimize transmission of vibrations and noise from the motors.

An incidental object is such a means providing a convenient step for entering a boat having a relatively high freeboard dimension.

In accordance with the invention the outboard motor is mounted on a supporting bracket member spaced materially rearwardly from the transom panel of the boat and at the proper operational height in relation to the water level by bracket supporting means comprising an outboard motor fuel container interposed directly between such transom panel and bracket member, and means securing the bracket member to the rearward side of the fuel container, and the forward side of the fuel container to the transom panel. Preferably the fuel container is formed of glass fiber reinforced resin or is made from some other strong and lightweight material. The means rigidly mounting the bracket member and the fuel container on the transom panel preferably comprises a plurality of coacting tension and compression members (i. e. preferably bolts and spacer sleeves surrounding the respective bolts) extending through the fuel container for assuming rearwardly and forwardly directed thrust loads acting on the bracket member relative to the transom panel. The fuel container itself assumes racking loads acting on the bracket member relative to the transom panel. As a result of this arrangement wherein the fuel cell contributes materially to the bracket support, and the bracket and the tension and compression members support, protect and strengthen the fuel tanks, great strength is achieved at a minimum of weight. The fuel container is positioned with its bottom wall generally horizontal and disposed flush with or slightly above the level of the boat bottom, but at a lever materially below the water level of the boat so that the fuel container constitutes an effective rearward extension of the boat hull providing the advantages described above. For structural strength and other reasons as will hereinafter more full appear, it is preferred that the opposite end portions of the tank be located at a higher level than the generally intermediate portion thereof and also that the generally intermediate portion slope downwardly and to the rear to a

level materially below the upper edge of the bracket member.

These and other features, objects and advantages of the invention will become more fully evident from the following description thereof by reference to the accompanying drawings.

Figure 1 is a perspective view of the stern of an outboard motor cruiser carrying a combined outboard motor mounting bracket and fuel tank combination in accordance with the invention.

Figure 2 is an end view of the mounting bracket and fuel container structure with parts broken away to show certain details of construction.

Figure 3 is a transverse sectional view taken on line 3—3 in Figure 2.

Figure 4 is a perspective view of an outboard motor cruiser carrying a modified form of the outboard motor mounting bracket and fuel container combination.

Figure 5 is a rear view of the combination shown in Figure 4, with parts broken away to show certain details.

Figure 6 is a transverse sectional view taken on line 6—6 in Figure 5, showing the mounting bracket and fuel container structure installed.

Referring to Figures 1 to 3, inclusive, the illustrated form of the combined mounting bracket and fuel tank combination is adapted for the support and fuel supply of two high-power outboard motors M1 and M2 for propulsion of the outboard motor cruiser B. The latter may be a relatively large outboard motor boat having a high transom panel T and otherwise so constructed that, as in the typical case, it is necessary or desirable to support the outboard motors on a separate bracket mounted on the rear side of the transom panel. In the improved arrangement the outboard motor supporting panel or bracket member **10** comprises a suitable strip of wood, plywood or other material of the requisite thickness and stiffness. The length of the panel **10** is somewhat less than the width of the boat B, and the width of the panel is determined primarily by the novel manner in which it is mounted, as will become evident.

Part of the mounting structure for the panel **10** comprises the elongated fuel container **12** preferably of a length equal to or somewhat exceeding the length of panel **10** and somewhat less than the width of the boat at the stern. The depth of the tank is determined by considerations to be described. The width of the tank measured lengthwise of the boat is determined by resolving the conflicting objectives of minimizing the over-all length of the cruiser with the outboard motor installed, for convenience in hauling the boat on trailers, and in launching the boat on the one hand, and of providing a relatively large storage capacity in the fuel container **12** so that as much as possible, if not all, of the entire fuel supply may be carried in the tank **12** for relatively long trips. In its illustrated form the tank bottom wall **12***a* conforms generally to the dihedral formation of the boat hull bottom at the stern and is placed at a level substantially the same as the hull bottom so as to constitute an effective rearward extension thereof as shown best in Figure 3. In its mounted position the forward wall **12***b* of the tank is disposed substantially parallel to the transom panel T, as is the tank's rear wall **12***c*. The latter lies in contact with the forward side of the bracket panel **10** whereas the forward wall of the tank is spaced slightly rearwardly from the rear side of the transom panel by shock mount elements to be described. The tank top wall **12***d* has respectively opposite end portions **12***d***1** which are elevated relative to the generally intermediate portion **12***d***2**. The latter preferably slopes rearwardly and downwardly from the transom panel T to the bracket panel **10** whereby clearance is provided adjacent the forward side of the bracket panel **10** for reception and operation of the outboard motor mounting clamps C, as shown. Another reason for sloping the top wall portion **12***d***2** is the increased stiffness which it imparts to the fuel container as a structure employed in supporting the bracket panel **10**, especially against racking loads such as the weight load of the outboard motors acting downwardly on the bracket panel relative to the transom panel T.

Each of the motor M1 and M2 is supplied with fuel from tank **12** through the hoses H extending through fittings F at convenient locations in the top wall of the tank, as shown. The usual arrangements for priming the engines and for pumping the fuel from the tank to the engines may be used, and the details thereof are not shown herein. The tank is provided with a filler cap B at a convenient location. Because the top of the tank is preferably located generally intermediate the top and bottom of the boat hull, the end portions of the tank top may be provided with step treads **14** as a convenience to passengers in stepping into the boat.

The bracket panel **10** and transom panel T are interconnected by a plurality of elongated bolts **16** which extend through passages formed in the tank by the elongated spacer sleeves **18** surrounding the bolts and acting as compression members preventing crushing of the tank when the bolts are placed under tension for drawing the bracket panel **10** toward the transom panel. The spacer sleeves **18** are appropriately sealed to the tank to avoid leakage around the ends of the sleeves. In the illustration there are five such bolts, two located near the top of the tank adjacent respectively opposite ends thereof, two additional bolts located near the bottom of the tank approximately in line with the normal mounting positions of the outboard motors, and the fifth bolt near the top and at the transverse midpoint of the tank. Preferably the first four mentioned bolts extend substantially horizontally, whereas the last bolt extends forwardly and upwardly at an angle approximately equal to the slope of the intermediate top wall portion **12***d*. Sloping of one or more bolts in this manner increases the strength of the bracket panel support structure as a whole in carrying heavy weight loads.

For shock mounting purposes the bolts pass through rubberlike grommets **20** installed in the transom panel. Compressed rubberlike washers **22** are interposed between the transom panel and the forward side of the tank surrounding the individual bolts, and compressed washers **24** are similarly interposed between the forward side of the transom panel and the nuts **16***a* or other enlargements on the ends of the bolts which project forwardly through the transom panel. Tightening of the nuts **16***a* places the structure under stress and produces the desired degree of rigidity, with the tank clamped between the bracket panel and transom panel. The spacer sleeves **18** resist tension established in the bolts by tightening of the nuts **16***a*; hence the coacting bolts and spacer sleeves serve to carry substantially all thrust loads acting on the bracket panel **10** relative to the transom panel T, whether in a forward or rearward sense. Racking loads acting on the panel **10**, that is, loads tending to move the panel edge wise relative to the transom panel T are carried primarily by the interconnected walls of the fuel container as an integral structure. If desired, web members, gussets or other reinforcing members, which may, if desired, additionally function as fuel bulkheads in the tank, may be provided to add further strength to the structure.

In most cases the level of the top wall of the tank at the opposite end portions thereof is approximately that required for the upper edge of the transom panel **10**. The latter is of a vertical width sufficient for securement of the panel by the bolts **16** passing therethrough. The bottom wall of the fuel tank being substantially flush with or slightly above the bottom of the boat hull, enables the tank to add greatly to the buoyancy of the hull at the stern and also to produce the other desirable effects described at the outset herein. Even though the tank may be filled with gasoline, for example, it will add materially to the buoyancy of the hull, since gaso-

line has a lower specific gravity than water. Consequently, the buoyancy of the fuel container interposed between the panels **10** and T at least partially counteracts the weight load imposed by the outboard motors and the fuel, as well as providing dynamic characteristics to the boat hull which improve the performance thereof at high speeds.

In Figures 4, 5 and 6, the principal features of the invention are embodied in a modifled arrangement wherein the parts which correspond to those in the previously described form bear similar reference characters with the prime notation. In this case the length of the fuel tank relative to the width of the boat is somewhat less than in the preceding form, and the arrangement is primarily suited for use with a single outboard motor to be mounted midway between the ends of the bracket panel **10'**. The tank **12'** has a somewhat different configuration than that in the preceding form, having greater rounding at the corners and ends and having a top wall configuration comprising the raised end portions **12*d*1'** which are convexly rounded transversely of the boat axis and which curve gently into the depressed intermediate portion **12*d*2'**. It is found that increased strength of the tank as a structure assisting the tension and compression members in supporting the bracket panel **10'** is obtained by employing such a curved contour, particularly at the top of the tank. Furthermore, a slight bulging formation on the sides and bottom walls adds strength to the tank itself against forces tending to break in these walls, as during possible impact of the tank against a pier or other obstacle.

In each case it is desirable to have a portion of the fuel tank abutted directly or through spacers to the transom panel at upper and lower levels spaced fairly widely apart. It is desirable that the upper anchor points to the transom panel be placed at a relatively high level and the lower bearing points at a relatively low level. These considerations affecting design enable the structure to withstand the torque load imposed by the motor thrust acting about a transverse axis generally parallel to the length of the bracket panel.

I claim as my invention:

1. In combination with an outboard motor boat having a transom panel, an outboard motor supporting member adapted for the mouting of an outboard motor thereon, an outboard motor fuel container adapted for supplying fuel to an outboard motor during operation of such motor, and means fixedly mounting said supporting member and said fuel container on the rearward side of said transom panel, with said supporting member spaced rearwardly from said transom panel and with said fuel container interposed between said supporting member and said transom panel, said fuel container having a generally horizontally bottom wall extending rearwardly from said transom panel and transversely of the boat below water level thereof, thereby to add buoyancy to the boat's stern at least partially counteracting the weight of an outboard motor mounted on said supporting member.

2. The combination defined in claim 1, wherein the means fixedly mounting the supporting member and fuel container on the transom panel comprises a plurality of bolt members interconnecting said supporting member and said transom panel at different locations spaced apart transversely and vertically in relation to the boat's hull, said bolt members extending through said fuel container, means for loading said bolt members in tension, thereby to exert force tending to draw said supporting member toward said transom panel, elongated tubular spacer members surrounding the respective bolt members and extending lengthwise thereof substantially from said transom panel to said supporting member, said spacer members being loaded in compression by the tension established in said bolt members for maintaining the spacing between said transom panel and such supporting member, rubberlike shock mount grommets in the transom panel surrounding the bolt members extending therethrough, rubberlike shock mount washers surrounding such bolt members and compressed between the fuel tank and transom panel, enlargement means on the ends of the bolt members projecting from the forward side of said transom panel, and rubberlike shock mount washers surrounding said bolt members and compressed between said enlargement means and said transom panel, whereby said fuel container and outboard motor supporting member are shock mounted on the transom panel.

3. In combination with an outboard motor boat having an upright transom panel, an outboard motor supporting panel adapted for the mounting of an outboard motor thereon, an outboard motor fuel container adapted for supplying fuel to an outboard motor during operation of such motor, said fuel container having upright front and rear walls, and means fixedly mounting said supporting panel and said fuel container on the rearward side of said transom panel, with said supporting panel in upright position spaced rearwardly from said transom panel and with said fuel container interposed between said supporting panel and said transom panel, said fuel container having a generally horizontal bottom wall extending rearwardly from said transom panel and transversely of the boat at a level below water level thereof and not materially above the bottom of such boat, thereby to add buoyancy to the boat's stern at least partially counteracting the weight of an outboard motor mounted on said supporting member.

4. The combination defined in claim 3, wherein the means fixedly mounting the supporting panel and fuel container on the transom panel comprises a plurality of bolt members interconnecting said supporting panel and said transom panel at different locations spaced apart transversely and vertically in relation to the boat's hull, said bolt members extending through said fuel container, means for loading said bolt members in tension, thereby to exert force tending to draw said supporting panel toward said transom panel, elongated tubular spacer members surrounding the respective bolt members and extending lengthwise thereof substantially from said transom panel to said supporting panel, said spacer members being loaded in compression by the tension established in said bolt members for maintaining the spacing between such panels, said fuel container having an inclined top wall portion which slopes materially rearwardly and downwardly from the transom panel to the outboard motor supporting panel generally intermediate the opposite ends of the latter, said supporting panel projecting materially above said top wall portion adjacent thereof.

5. The combination defined in claim 3, wherein the means fixedly mounting the supporting panel and fuel container on the transom panel comprises a plurality of bolt members interconnecting said supporting panel and said transom panel at different locations spaced apart transversely and vertically in relation to the boat's hull, said bolt members extending through said fuel container, means for loading said bolt members in tension, thereby to exert force tending to draw said supporting panel toward said transom panel, elongated tubular spacer members surrounding the respective bolt members and extending lengthwise thereof substantially from said transom panel to said supporting panel, said spacer members being loaded in compression by the tension established in said bolt members for maintaining the spacing between such panels, the fuel container having substantially horizontal top wall portions at respectively opposite ends thereof and an inclined top wall portion extending between such horizontal top wall portions, which inclined portion slopes materially rearwardly and downwardly from the transom panel to the outboard motor supporting panel generally intermediate the opposite ends of the latter, said supporting panel projecting materially above said top wall portion adjacent thereto.

6. The combination defined in claim 3, wherein the means fixedly mounting the supporting panel and fuel container on the transom panel comprises a plurality of bolt members interconnecting said supporting panel and said transom panel at different locations spaced apart transversely and vertically in relation to the boat's hull, said bolt members extending through said fuel container, means for loading said bolt members in tension, thereby to exert force tending to draw said supporting panel toward said transom panel, elongated tubular spacer members surrounding the respective bolt members and extending lengthwise thereof substantially from said transom panel to said supporting panel, said spacer members being loaded in compression by the tension established in said bolt members for maintaining the spacing between such panels, the fuel container having a top wall including relatively high opposite end portions and a generally intermediate portion depressed materially below said end portions at least at a location adjacent to the outboard motor supporting panel.

7. The combination defined in claim 1, wherein the means fixedly mounting the supporting member and fuel container on the transom panel comprises a plurality of bolt members interconnecting said supporting member and said transom panel at different locations spaced apart transversely and vertically in relation to the boat's hull, said bolt members extending through said fuel container, means for loading said bolt members in tension, thereby to exert force tending to draw said supporting member toward said transom panel, elongated tubular spacer members surrounding the respective bolt members and extending lengthwise thereof substantially from said transom panel to said supporting member, said spacer members being loaded in compression by the tension established in said bolt members for maintaining the spacing between such transom panel and such supporting member, rubberlike shock mount grommets in the transom panel surrounding the bolt members extending therethrough, rubberlike shock mount washers surrounding such bolt members and compressed between the fuel tank and transom panel, enlargement means on the ends of the bolt members projecting from the forward side of said transom panel, and rubberlike shock mount washers surrounding said bolt members and compressed between said enlargement means and said transom panel, whereby said fuel container and outboard motor supporting panel are shock mounted on the transom panel.

8. In combination, an outboard motor supporting member adapted for mounting behind the transom panel of an outboard motor boat for supporting an outboard motor operatively thereon, an outboard motor fuel tank having normally a generally horizontal bottom and upright front and rear walls, means holding said supporting member in upright position adjacent the rear wall of said fuel tank at a relative heightwise location thereon for operatively supporting an outboard motor in relation to the water level with the tank's bottom below water level,

and means for mounting said tank and supporting member on the back side of an outboard motor boat transom panel with the supporting member operatively positioned spaced rearwardly from such panel and with the tank interposed between such transom panel and supporting member.

9. The combination defined in claim 8, wherein the holding means comprises a plurality of elongated bolts passing through the tank and projecting beyond the front wall thereof, the projecting ends of such bolt providing the means for mounting the tank and supporting member on the transom panel.

10. The combination defined in claim 9, and a plurality of relatively stiff spacer sleeves extending through the tank surrounding the respective bolts, said spacer sleeves resisting tension established in the bolts for connecting the supporting panel to the transom panel and thereby preventing crushing of the tank by such bolt tension.

11. In combination with an outboard motor boat having an upright transom panel, an outboard motor mounting bracket member, and means rigidly mounting said outboard motor mounting bracket member on the back side of said transom panel at a location spaced materially rearwardly therefrom, said means comprising an outboard motor fuel container interposed directly between said panel and bracket member, and means securing said bracket member to the rearward side of said fuel container, and the forward side of said fuel container to said transom panel.

12. The combination defined in claim 11, wherein the fuel container is of generally elongated form transversely of the boat and has a generally horizontal bottom wall disposed at a level below water level but not lower than the boat's bottom.

13. The combination defined in claim 11, wherein the fuel container is of generally elongated form transversely of the boat and has a generally horizontal bottom wall disposed at a level below water level but not lower than the boat's bottom, and a top wall comprising elevated opposite end portions and a relatively depressed generally intermediate portion.

14. The combination defined in claim 11, wherein the securing means comprises a plurality of coacting tension and compression members extending through the fuel container for assuming forwardly and rearwardly directed thrust loads acting on the bracket member relative to the transom panel, the interconnected walls of the fuel container itself being constructed to resist racking loads acting on such bracket member.

References Cited in the file of this patent

UNITED STATES PATENTS

1,870,595 Thaden ---------- Aug. 9, 1932

FOREIGN PATENTS

19,953 Great Britain ---------- of 1910