Feb. 18, 1947. C. O. DAVIS ET AL 2,415,814

CABLE CUTTING METHOD AND DEVICE

Filed Nov. 15, 1943 2 Sheets-Sheet 1

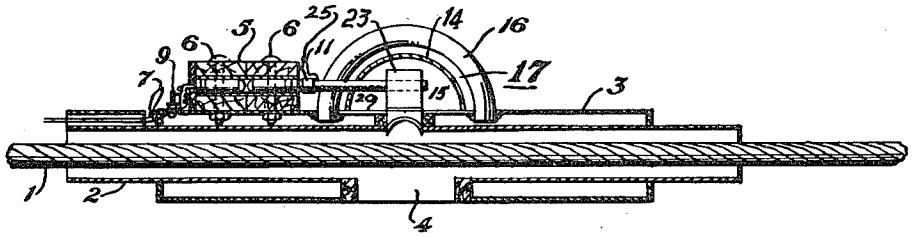

Fig. 2

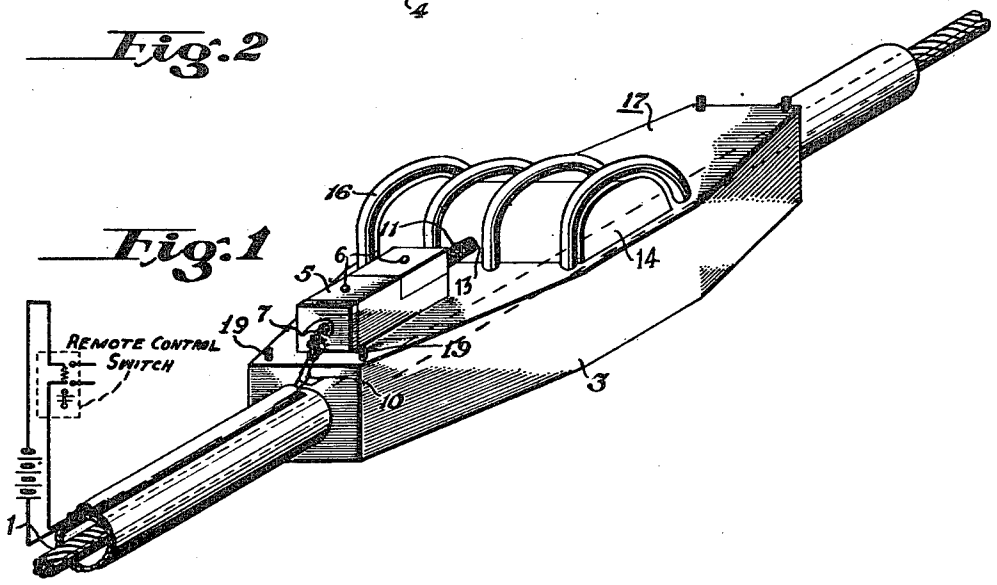

Fig. 1

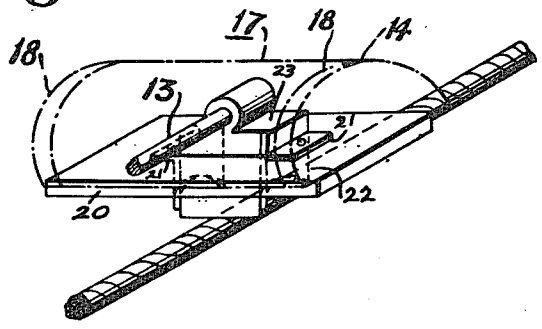

Fig. 3

Clyde O. Davis
Walter E. Lawson INVENTORS
James L. Ver Bryck

BY Thos. A. Wilson

ATTORNEY

Feb. 18, 1947. C. O. DAVIS ET AL 2,415,814

CABLE CUTTING METHOD AND DEVICE

Filed Nov. 15, 1943 2 Sheets-Sheet 2

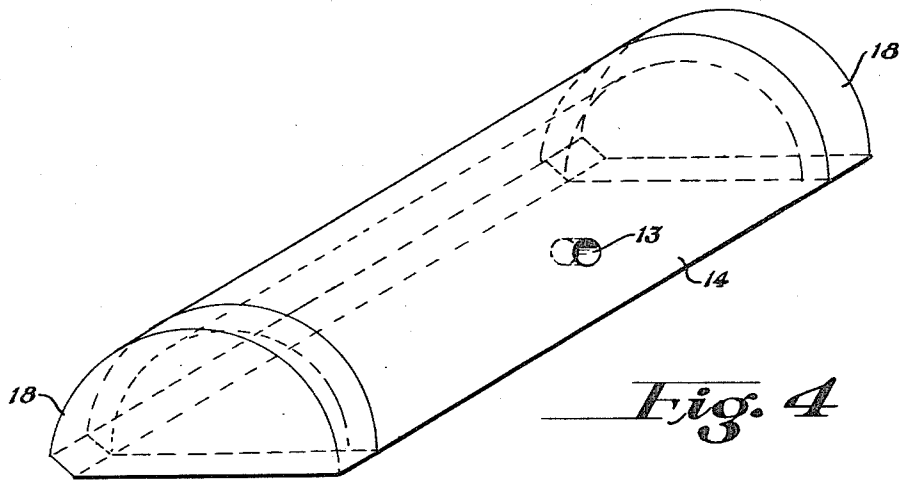

Fig. 4

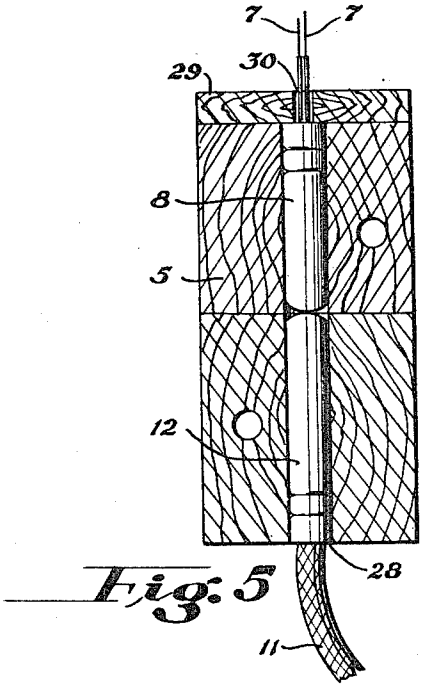

Fig. 5

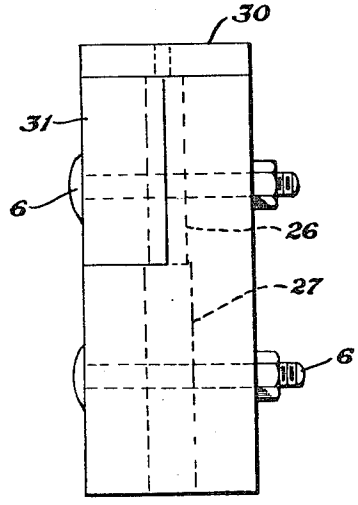

Fig. 6

Clyde O. Davis
Walter E Lawson INVENTORS
James L. Ver Bryck

BY Thos. A. Wilson

ATTORNEY

Patented Feb. 18, 1947 2,415,814

UNITED STATES PATENT OFFICE

2,415,814

CABLE CUTTING METHOD AND DEVICE

Clyde O. Davis, Woodbury, N. J., Walter E. Lawson, Wilmington, Del., and James L. Ver Bryck, Woodbury, N. J., assignors to E. I. du Pont de Nemours & Company, Wilmington, Del., a corporation of Delaware

Application November 15, 1943, Serial No. 510,404

9 Claims. (Cl. 164—47)

1

This invention relates to a method and apparatus for severing elongated articles such as cables, rods, chains, and the like. More particularly it pertains to such a method and apparatus adapted to employ a detonating explosive charge which accomplishes the desired result without the aid of a mechanical cutting element.

While cable cutting devices of the prior art have been satisfactory, generally, for the particular purpose for which they were designed, they nevertheless possess undesirable features and are limited in application. Such devices employing knives or other types of mechanical cutting members are actuated too slowly for effective severance of cables and the like, particularly when said cables are moving at right angles, for example, to the cutting path of said member.

One application where more rapid cutting is highly desirable is in the case of gliders towed by airplanes, where immediate release of the glider may be essential. Such a method of carrying goods and personnel has become increasingly important. The ability of the pilot to sever the connections between the two vehicles at a moment's notice and by remote control is of prime consequence.

An object of this invention is an improved method and apparatus for severing articles such as cables, rods, tubes, wires, bars, ropes, pipes, and the like. Another object is the provision of a cutting device powered by a high explosive without the aid of mechanical cutting means. A further object is such a device adapted to sever completely such articles, said device being relatively small and of light weight and readily portable but strong and sturdy. A still further object is a device of the type specified adapted to sever said articles while under various conditions such as moving past said device, under tension, motionless, under no tension, or any possible combination thereof. Other objects will appear from the description hereinafter given.

In order to disclose our invention more fully, reference is made to the accompanying drawings representing a preferred embodiment thereof. These are to be regarded as illustrative only, and are not to be construed as limitations of the scope of the invention, since this may be expressed in various forms.

Referring to the drawings, in which the same numerals are used to indicate corresponding parts of the respective views, Figure 1 is a perspective view of the entire assembly. Figure 2 is a sectional side view of Figure 1. Figure 3 is a detailed view of the explosive charge showing its protective coverings and the base in which it rests. Figure 4 is a view of the housing in which the charge is placed but not of exactly the same scale as Figure 3. Figure 5 shows a cross-section of the loaded initiator block. Figure 6 is a perspective view of said block showing the cutaway portion and bolts used to fasten said block to the octagonal steel box of Figure 1.

2

Referring more specifically to the drawings, the cable 1 to be cut passes through conduit 2 attached to the ends of an octagonal box 3 built of thin steel sheets, said box having an opening 4 in the top and bottom thereof. The initiator block 5 is bolted 6 to said box. Two leg wires 7 of the blasting cap 8 are attached to post 9 on said box in order that the cap may be removed when desirable. Similar wires 10, extending from the controls of an airplane or other vehicle with which the cutting device may be associated, are fastened to said posts. These wires pass to the battery and the remote control switch, the closing of which at the place of control causes the firing of the explosive charge. A detonating fuse 11 passes from an uncharged cap 12, serving as a protective covering for said fuse, through a small opening 13 in the charge housing 14 and into the charge 15, said housing having end pieces 18—18. Metallic bars 16 secured to the box 3 hold the charge assembly 17 in position over the opening 4. A shield (not shown) is fastened to members 19 disposed on the box 3 in order to protect any objects which may be near the charge.

Referring to Figures 3 and 4, the charge 15 fits into an opening in a pulverizable and light weight material 20 such as Celotex board, the base of said charge being flush with the underside of the Celotex. Copper sheet anchors 21—21, welded to each end of the semicylindrical charge liner 22, extend up the side of the charge and bend over the Celotex. While a thin semicylindrical copper liner is preferred, other liners such as brass, bronze, cadmium, steel, aluminum, or a nonferrous metal backed by steel may be employed. Desirably the liner will be semicylindrical, although it may be of the flat ribbon or wedge type. Said anchors and portion of the charge, including the booster 23 thereof, extending above the Celotex, are covered substantially with a moldable impregnated fabric of the type described in the copending application of Johnson and Ver Bryck, Serial Number 484,240, filed April 23, 1943. This fabric is dipped in a quick-drying solvent such as acetone and molded about said portions of the charge and board. When the solvent evap-

orates, the fabric becomes hard and adheres to the objects about which it is molded. The detonating fuse 11 passes into the booster as shown, said fuse having a grommet 25 of said fabric thereon which is adjacent to the inside of said charge housing 14.

The semicylindrical housing 14 depicted in Figure 4 is placed over the assembly of Figure 3, the Celotex base 20 thereof forming the bottom of said housing. The detonating fuse extends outside the housing through an opening 13 therein, said grommet 25 limiting the distance said fuse may extend outside the housing. The assembly 17 thus formed, having been covered with said fabric and painted, is placed beneath the bars 16 of Figure 1. The entire resulting assembly, including the box 3 and protective shield, is wrapped in waterproof canvas and attached to the towing craft.

The initiator block 5, Figures 5 and 6, comprises a wooden block having bore holes 26 and 27 therethrough with a sleeve 28 fitted therein and caps 8 and 12 disposed in said sleeve. A wooden strip 29, having a small opening 30 through which the cap leg wires 7 pass, is secured to said block in order to maintain the cap 8 in position. The part of said block around this cap includes a cutaway portion 31 which serves as a convenient means for removing said cap by releasing the bolt 6.

When, for example, it becomes necessary to release a glider from an airplane by which it is being towed, this is accomplished by pressing a button in the control compartment of the towing craft, thereby closing the electric circuit through the cap. Thus the explosive charge is detonated and the cable cut at substantially the instant the button is pushed.

This invention has numerous applications. It may be employed successfully in severing various articles such as cables, chains, rods, tubes, wires, bars, ropes, pipes, and similar members in various media such as those encountered under water, beneath the earth's surface, or in air. More specific applications are the cutting of oil well cables, power lines, and means connected to vessels. It will be obvious that the details of the assembly can be modified according to the desired applications, the explosive charge being secured to any suitable support.

In order to accomplish the purpose of this invention, a high density, high velocity explosive charge which will reach its maximum velocity of detonation very rapidly is essential. Therefore, a cast blend of trinitrotoluene with a higher melting point explosive such as pentaerythritoltetranitrate, ethylenedinitramine or cyclotrimethylenetrinitramine for the main charge and pressed blend of the former compound with either of the latter three for the booster charge are preferred. However, other high density, high velocity explosives, including various pressed high brisance explosives, may be used. The charge will comprise at least one normally solid explosive compound.

In the embodiment of the invention as shown in the accompanying drawings, a preferred shape of charge has been depicted for cutting the type of articles represented; however, it should be appreciated that the invention is not limited thereto, since other shapes of charges may be used to cut various objects. For example, we may use a charge having a bowed or curved surface instead of a horizontal, semicylindrical, cuneiform, or flat surface, facing the object to be cut, and having a similar shaped liner fitted therein or thereon. Further, we may use a disc shape charge, the perimeter thereof being shaped to receive the liner. A charge of this shape would be particularly applicable to cutting pipes, in which event said charge would be placed inside the pipe. If it is more desirable, however, to cut the pipe or similar object from the outside, a circular charge would be used. In this case, the pipe would be completely encircled by said charge having the surface thereof facing the pipe shaped to receive one of the liners hereinabove mentioned. Likewise, if it is desired to sever two articles simultaneously, for instance, two substantially parallel articles, we may use a rectangular charge having the desired shaped surfaces with liners disposed therein on the two surfaces of the charge facing the articles to be cut.

It is believed, although we do not limit ourselves to any theories or principles contained herein, that the cutting action results by reason of the high velocity detonation of the explosive charge and the flying particles of the metal liner which sever the intended elongated object instantly. The liner is so shaped as to act most effectively as a projectile.

While we prefer to have the charge relatively close to the article to be cut, it is not essential that it be in contact therewith. Thus, said article may be separated from the charge a distance of at least 15 to 20 times the width of the liner. This is another advantage of a cutting device of the type disclosed.

Obviously the invention is not limited to severing objects which pass through conduits such as tubes and/or boxes, since the explosive assembly may be held in firing position by means of any suitable support. While Celotex and a certain type of impregnated fabric have been selected, because of their light weight and non-fragmenting properties, to enclose the explosive charge, other materials may be used so long as they accomplish the desired result.

As various changes of this invention may be made in the composition, design, construction, and arrangement of parts herein without departing from the scope thereof, it is to be appreciated that the invention is limited to the specific embodiments thereof only in so far as expressed in the subjoined patent claims.

We claim:

1. A method of severing an elongated object which comprises juxtaposing with said object an explosive charge comprising a cast blend of pentaerythritol tetranitrate and trinitrotoluene, positioning a metallic liner on the side of the explosive charge facing the object to be severed, effecting the detonation of the explosive charge, and thereby severing said elongated object.

2. A method of severing an elongated object which comprises juxtaposing with said object an explosive charge comprising a cast blend of ethylenedinitramine and trinitrotoluene, positioning a metallic liner on the side of the explosive charge facing the object to be severed, effecting the detonation of the explosive charge, and thereby severing said elongated object.

3. A method of severing an elongated object which comprises juxtaposing with said object an explosive charge comprising a cast blend of cyclotrimethylenetrinitramine and trinitrotoluene, positioning a metallic liner on the side of the explosive charge facing the object to be severed, effecting the detonation of the explosive charge, and thereby severing said elongated object.

4. A method of severing an elongated object which comprises juxtaposing with said object a main polyhedral explosive charge comprising a blend of trinitrotoluene with a higher melting point explosive, placing a high velocity and relatively high density booster charge on one surface of said main charge, said main charge having a cuneiform surface facing the object to be severed, fitting a metallic liner to said surface, the apex of said surface and liner being internal, effecting detonation of the explosive charge and thereby severing said elongated object.

5. A method of severing an elongated object which comprises juxtaposing with said object a main polyhedral explosive charge comprising a cast blend of trinitrotoluene with a higher melting point detonating explosive, placing on one surface of said main charge a booster charge comprising a pressed blend of trinitrotoluene with a higher melting point detonating explosive, positioning a metallic liner on the opposite surface of said main charge, said main charge having an internal semicylindrical surface facing the object to be severed and a thin copper liner fitted snugly therein, effecting detonation of the explosive charge and thereby severing said elongated object.

6. A cutting device for severing elongated objects which comprises an elongated polyhedral explosive charge comprising a cast blend of trinitrotoluene and a higher melting point detonating explosive, means for initiating said charge associated therewith, a wedge-shaped metal liner positioned on the surface of the charge facing said object, a base of light weight material having said charge embedded therein, a semicylindrical container into which said base is fitted, and a protective covering substantially enclosing said container and base.

7. A cutting device for severing elongated objects which comprises an explosive of elongated polyhedral shape as the main charge having an internal semicylindrical surface facing said object and including a cast blend of trinitrotoluene and a higher melting point detonating explosive, a booster charge disposed on said main charge opposite said semicylindrical surface including a pressed blend of trinitrotoluene and a high brisance explosive, means for initiating said charge associated therewith, a metal liner snugly fitted into said concave surface, a base of light weight material having said charge disposed therein, a semicylindrical container into which said base is fitted in such manner that said base forms the bottom of the container and the liner remains substantially flush with the outside surface of said base, and a protective covering substantially enclosing said container and base.

8. A cutting device for severing elongated objects which comprises an elongated polyhedral explosive charge comprising an explosive composition characterized by a high brisance of the same order of magnitude as that of a blend of trinitrotoluene and a higher melting point detonating explosive, means for initiating said charge associated therewith, a wedge-shaped metal liner positioned on the surface of the charge facing said object, a base of light weight material having said charge embedded therein, a semi-cylindrical container into which said base is fitted, and a protective covering substantially enclosing said container and base.

9. A method of severing an elongated object which comprises juxtaposing with said object an explosive charge characterized by a higher brisance of the same order of magnitude as a blend of pentaerythritoltetranitrate and trinitrotoluene, positioning a metallic liner on the side of the explosive charge facing the object to be severed, effecting the detonation of the explosive charge, and thereby severing said elongated object.

CLYDE O. DAVIS.
WALTER E. LAWSON.
JAMES L. VER BRYCK.

REFERENCES CITED

The following references are of record in the file of this patent:

UNITED STATES PATENTS

Number	Name	Date
1,526,274	Fitzsimons	Feb. 10, 1925
2,020,410	Greene	Nov. 12, 1935
1,312,405	Lander	Aug. 5, 1919
1,641,483	Greene	Sept. 6, 1927
2,058,287	Anderson	Oct. 20, 1936