Dec. 12, 1961 L. SAUTEREAU 3,012,363

DRAFTING TABLES

Filed July 14, 1959

Fig.1

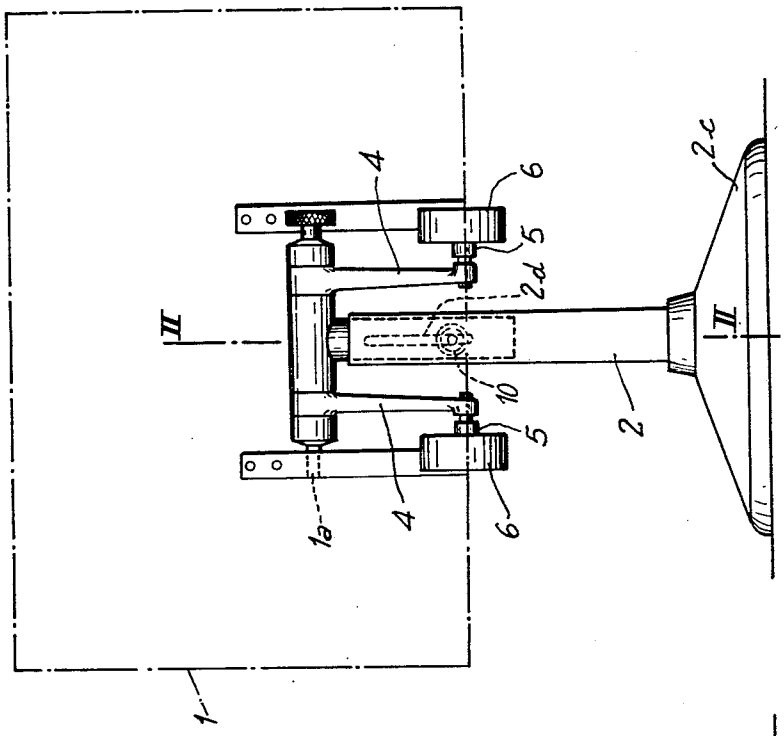

Fig.2

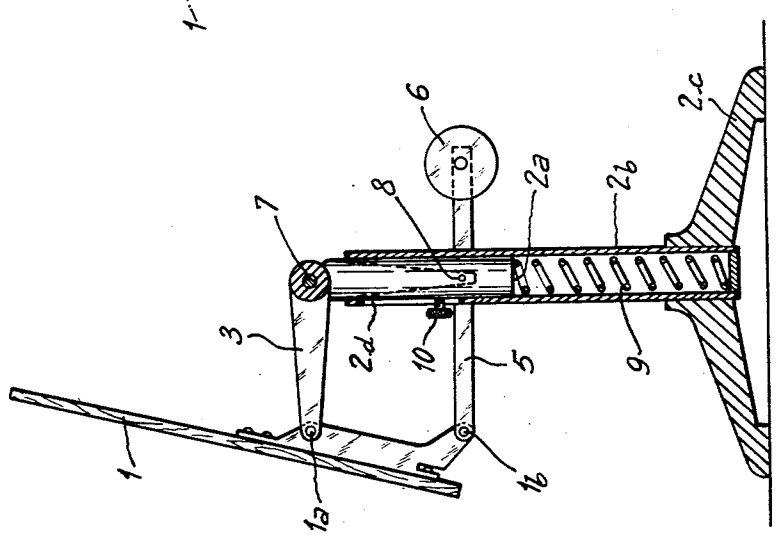

Inventor:
Lucien Sautereau
by:
Michael S. Striker
Attorney

United States Patent Office 3,012,363 Patented Dec. 12, 1961

3,012,363

DRAFTING TABLES

Lucien Sautereau, 9 Boulevard du Temple, Paris 3, France

Filed July 14, 1959, Ser. No. 826,963
Claims priority, application France July 30, 1958
3 Claims. (Cl. 45—131)

The present invention relates to drafting tables in which the drawing-board is mounted on a support by means of a deformable parallelogram motion, of which two vertices are carried by the drawing-board and a third is mounted on the support.

In tables of this type the length of the parallelogram links must be sufficient to enable the draftsman to work conveniently at different points on the board. The length of the links must be increased beyond this because drafting tables may be used by draftsmen of considerably differing stature. To satisfy both these requirements the links have a length such that the structure of the table is cumbersome.

An object of the present invention is to reduce this encumbrance and it consists in making the support is two or more parts which can be displaced one relative to another in the height direction, the upper part supporting the third vertex of the parallelogram.

Preferably the parts of the support form a telescopic structure.

By way of example in the accompanying drawings,

FIGURE 1 is a front view of a drafting table in accordance with the present invention and,

FIGURE 2 is a section on the line II—II of FIGURE 1.

The table illustrated consists of a drawing-board **1** and a support **2**.

The board **1** is attached to the support **2** by two parallelograms of which the four vertices are marked **1***a*, **1***b*, **7** and **8** and of which the sides are formed by links **3**, **4**, **5**, and the board **1**. The links **5** are extended and carry counterweights **6**.

The link **1** is parallel to the line **1***a*, **1***b*, which is itself substantially parallel to the board **1**. To fix the inclination of the board **1** the link **4** is locked on the shaft **7** by a device not forming in itself a feature of the present invention and such as is described in the specification of British Patent No. 657,961 of April 5, 1942 in the name of the present applicant.

In accordance with the present invention the support **2** is formed of two parts **2***a* and **2***b*. The upper part **2***a* supports the shaft **7** and has a portion of cylindrical form which is slidable in the part **2***b* rigid with a foot **2***c*. A spring **9** urges the part **2***a* upwardly. A screw **10** sliding in a slot **2***b* in the part **2***d* and carried by the part **2***a* enables the latter to be clamped and thus fixed in relation to the part **2***b*.

By sliding the part **2***a* in relation to the part **2***b* the board **1** is moved from a starting position to a basic position which corresponds to the stature of the draftsman. For this operation there is no need to touch links **3** and **5**. They are utilized solely to bring the board from its basic position to the working position in which the draftsman can work conveniently. It will be clear that the length of the links **3** and **5** necessary to move from the basic position to the working position is less than that which would be necessary to move from the starting position to the working position as is the case in present drafting tables. The resulting reduction in bulk of the drafting table may be of the order of 50 percent.

Naturally the present invention is not limited to the example above described. Thus for example the two parts **2***a* and **2***b* instead of being arranged to telescope one into the other could be of the screw and nut type.

What I claim is:

1. In a drawing stand, in combination, support means comprising a single stationary first part and at least one second part coaxial and substantially vertically movably connected with said first part; a drawing board; and means including at least one deformable parallel motion mechanism connecting said drawing board with said second part, said parallel motion mechanism having a first and a second vertex fixed to said drawing board and a third vertex fixed to said second part whereby the vertical position of the drawing board is adjustable by moving said second part with respect to said first part or by deforming said parallel motion mechanism and the inclination of said drawing board is adjustable by pivoting the parallel motion mechanism and the drawing board about said third vertex.

2. In a drawing stand, in combination, support means comprising a single stationary upright first part and a coaxial second part, one of said parts telescopically received in the other part and said second part movable in substantially vertical directions with respect to said first part; a drawing board; and means including at least one deformable parallel motion mechanism connecting said drawing board with said second part, said parallel motion mechanism having a first and a second vertex fixed to said drawing board and a third vertex fixed to said second part whereby the vertical position of the drawing board is adjustable by moving said second part with respect to said first part or by deforming said parallel motion mechanism and the inclination of said drawing board is adjustable by pivoting the parallel motion mechanism and the drawing board about said third vertex.

3. In a drawing stand, in combination, support means comprising a single stationary first part and at least one second part coaxial and substantially vertically movably connected with the first part; a drawing board; and means including two deformable parallel motion mechanisms for connecting the drawing board with the second part, said mechanisms disposed at the opposite sides of the support means and having aligned first and second vertices articulately fixed to the drawing board, aligned third vertices fixed to the second part in such a way that the drawing board is pivotable thereabout, and aligned fourth vertices spaced from and free to bypass the support means when the drawing board is pivoted about said third vertices whereby the position of the drawing board may be adjusted by moving the second part with respect to the first part, by deforming said mechanisms, and by pivoting the drawing board about said third vertices.

References Cited in the file of this patent

FOREIGN PATENTS

920,058	France	Mar. 26, 1947
945,363	France	May 3, 1949
946,052	France	May 23, 1949
657,961	Great Britain	Oct. 3, 1951

UNITED STATES PATENT OFFICE

CERTIFICATE OF CORRECTION

Patent No. 3,012,363 December 12, 1961

Lucien Sautereau

It is hereby certified that error appears in the above numbered patent requiring correction and that the said Letters Patent should read as corrected below.

In the heading to the printed specification, line 5, for "July 30, 1958" read -- July 31, 1958 --.

Signed and sealed this 15th day of May 1962.

(SEAL)
Attest:

ERNEST W. SWIDER
Attesting Officer

DAVID LADD
Commissioner of Patents