Oct. 3, 1961 D. FREEDMAN 3,002,895

INCUBATOR-SHAKER APPARATUS

Filed Feb. 11, 1957 4 Sheets-Sheet 1

Fig. 1.

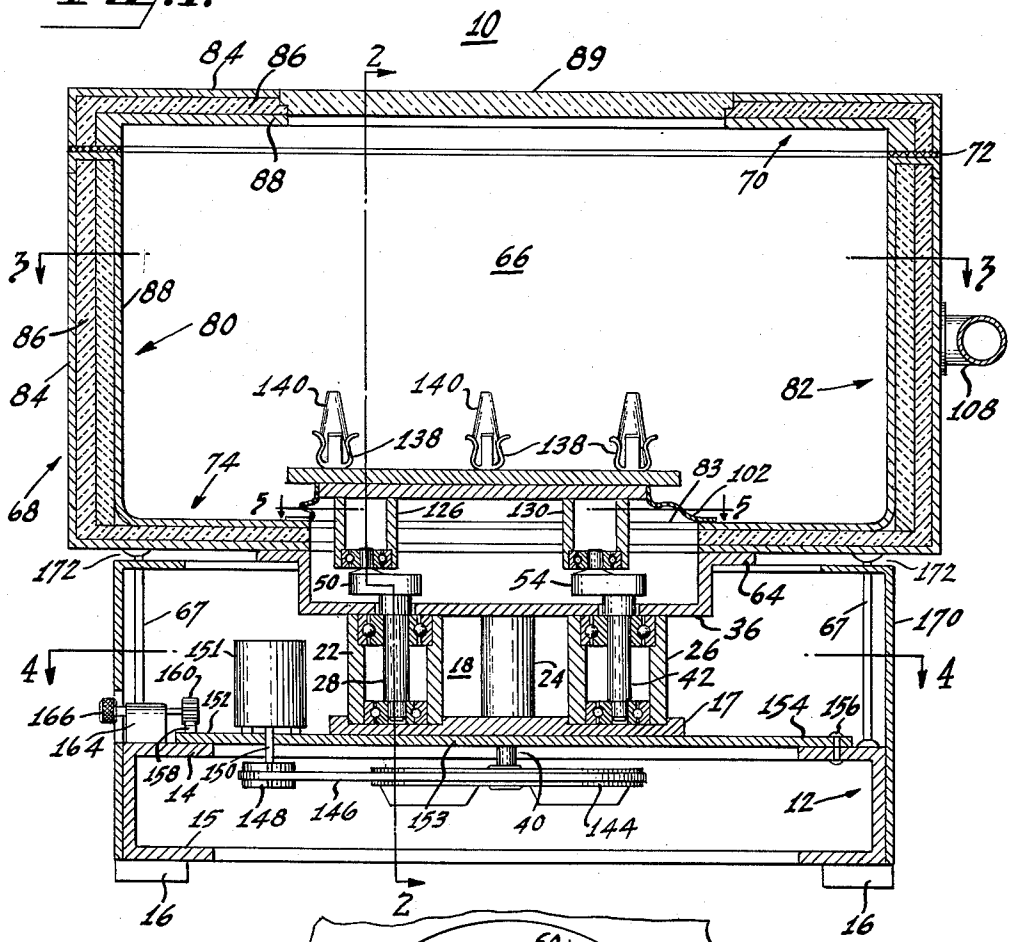

Fig. 5.

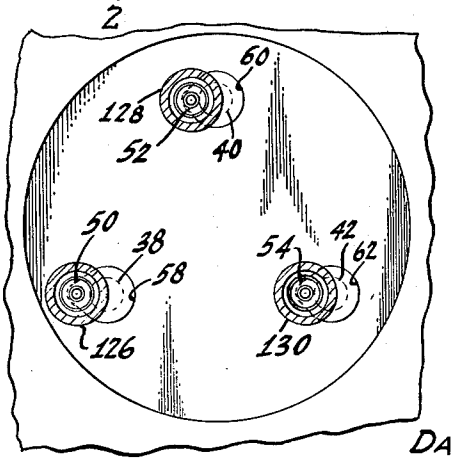

INVENTOR.
DAVID FREEDMAN
BY Robert A. Green
ATTORNEY

Oct. 3, 1961 D. FREEDMAN 3,002,895

INCUBATOR-SHAKER APPARATUS

Filed Feb. 11, 1957 4 Sheets-Sheet 2

Fig. 2.

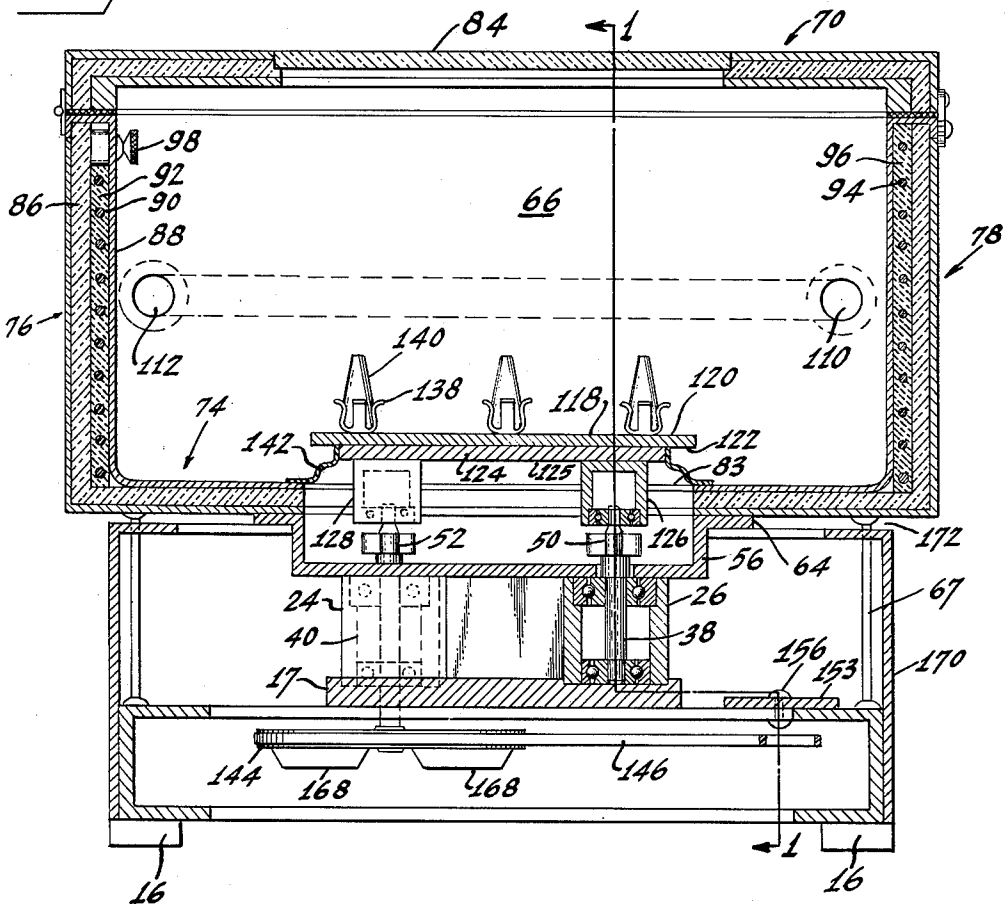

INVENTOR.
DAVID FREEDMAN
BY Robert A. Green
ATTORNEY

Oct. 3, 1961 D. FREEDMAN 3,002,895

INCUBATOR-SHAKER APPARATUS

Filed Feb. 11, 1957 4 Sheets-Sheet 3

Fig. 3.

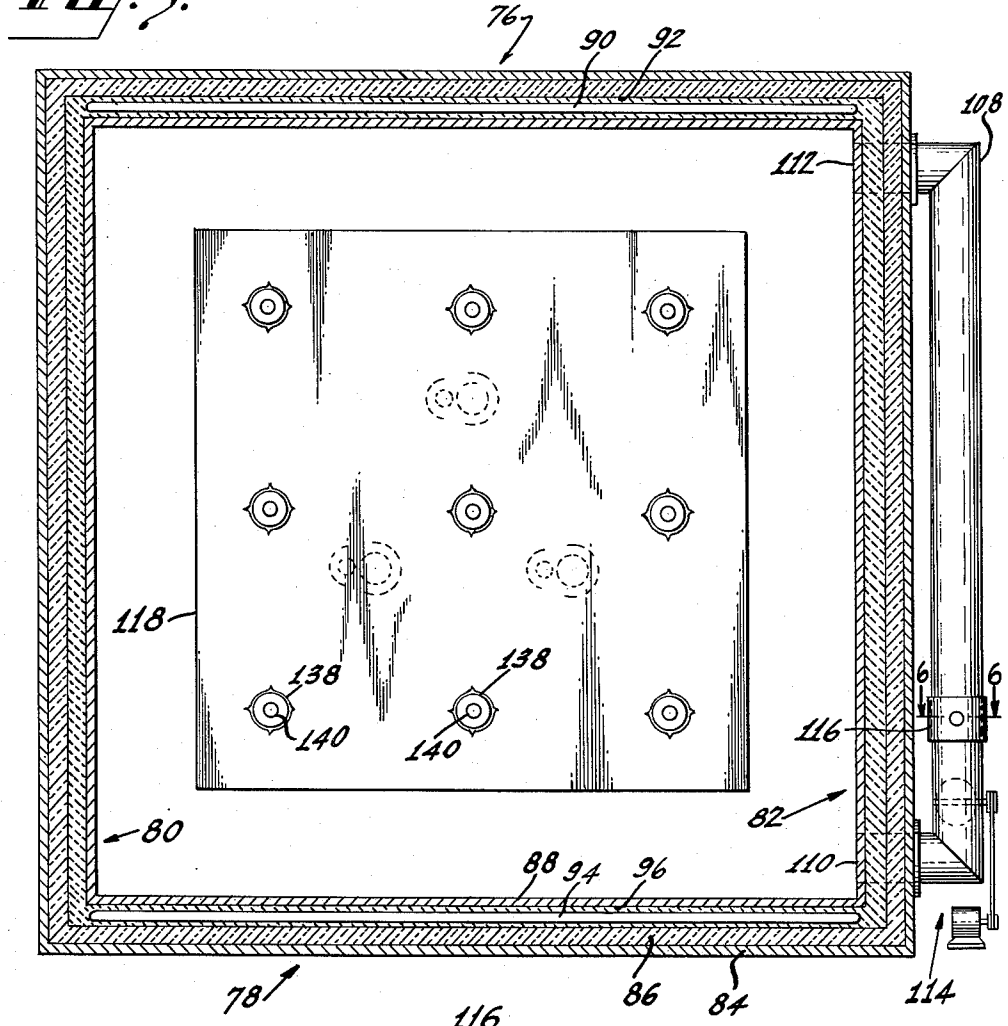

Fig. 6.

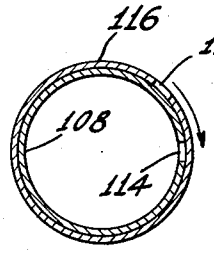

INVENTOR.
DAVID FREEDMAN
BY Robert C. Shea
ATTORNEY

Oct. 3, 1961 D. FREEDMAN 3,002,895

INCUBATOR-SHAKER APPARATUS

Filed Feb. 11, 1957 4 Sheets-Sheet 4

Fig. 4.

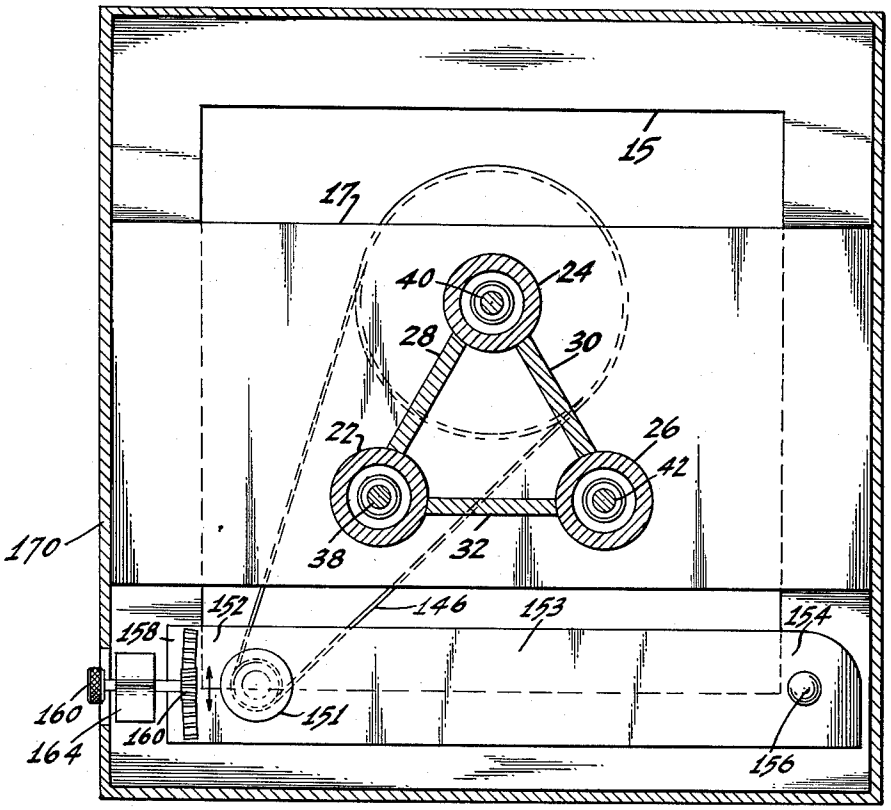

INVENTOR.
DAVID FREEDMAN
BY
Robert A. Green
ATTORNEY

United States Patent Office 3,002,895 Patented Oct. 3, 1961

3,002,895 INCUBATOR-SHAKER APPARATUS

David Freedman, 348 S. 3rd Ave., Highland Park, N.J.

Filed Feb. 11, 1957, Ser. No. 639,362
7 Claims. (Cl. 195—143)

This invention relates to incubating apparatus and, particularly, to sealed incubators having means for shaking the material being incubated.

In the past, when it has been desired to shake bacteriological material being incubated, it has been necessary to set up a shaker table in an incubation room. The limitations imposed by having an incubation chamber of the size of a room are obvious. One limitation is that it is difficult to shake different materials under different incubation conditions since it is ordinarily not feasible to provide a separate incubation room for each set of conditions or materials.

The present invention is directed toward the provision of an improved combination incubator-shaker unit occupying comparatively small space and capable of maintaining desired temperature conditions and bacteriological isolation in the incubator while allowing shaking of the incubating material over a wide range of speeds.

According to another aspect of the invention, an improved control arrangement for a variable speed pulley is provided which allows fine and accurate adjustment of the shaking speed of the apparatus.

In general, the invention comprises an air-tight incubator chamber having an heat-insulating lining which shields the interior of the incubator from externally generated heat. The incubator includes means for maintaining a desired constant temperature uniformly distributed therein. A shaker table is provided within the incubator and is supported on a balanced supporting and driving mechanism which is driven from outside of the incubator. The incubator is completely sealed off from the surrounding environment so that pathogenic organisms may be safely contained therein.

The driving mechanism for the shaker table includes a motor-driven variable speed pulley and an improved control means therefor which allows coverage of the entire operating range thereof with no more than a single revolution of a control knob. Means are also provided for promoting the circulation of air away from the outside of the incubator to remove externally generated heat.

The invention is described in greater detail by reference to the drawings wherein:

FIG. 1 is a sectional elevational view of apparatus embodying the principles of the invention, the view being taken along the line 1—1 in FIG. 2;

FIG. 2 is a sectional view along the line 2—2 in FIG. 1;

FIG. 3 is a sectional view along the line 3—3 in FIG. 1;

FIG. 4 is a sectional view along the line 4—4 in FIG. 1;

FIG. 5 is a sectional view along the line 5—5 in FIG. 1; and

FIG. 6 is a sectional view along the line 6—6 in FIG. 3.

A combination incubator-shaker 10 embodying the principles of the invention includes a suitable open top and open bottom box-like base support member 12 of steel or the like having a peripheral top ledge 14 and a peripheral bottom ledge 15. The base support member 12 rests on suitable support legs 16. A cross member 17 extends across the open top of the base support member and is suitably secured to the top ledge 14, for example by welding. The cross member 17 has secured thereto, for example by welding, a lower bearing housing 18 which comprises three hollow open-ended tubular sleeves 22, 24, and 26 oriented vertically and held spaced apart 120° by wall 28 connected between sleeves 22 and

24, wall 30 between sleeves 24 and 26, and wall 32 between sleeves 22 and 26. The sleeves and interconnecting walls are all of the same height to provide a balanced support structure for a purpose to be described. The sleeves 22 and 26 are closed at their lower ends by the cross member 17 which is provided with an aperture 36 which is coaxial and coextensive with the bore of the sleeve 24.

Shafts 38, 40, and 42 are rotatably supported in suitable bearings within the sleeves 22, 24, and 26. The shafts 38, 40, and 42 carry at their upper ends eccentric studs 50, 52, and 54, respectively, all of which are of the same size and shape and are oriented in the same angular relationship (FIG. 5) with respect to their respective shafts.

A cover plate 56 is welded or otherwise secured in air-tight engagement to the top surfaces of the sleeves 22, 24, 26 and the wall members 28, 30, 32. The cover plate is provided with three apertures 58, 60, and 62 of suitable diameter to receive the eccentric studs 50, 52, 54 of the shafts 38, 40, 42. The cover plate 56 also includes a flanged rim 64 on which an incubator is supported. The incubator is also supported by rods 67 secured between the incubator and the base support member 12 at its corners. The incubator is fixed to the cover plate 56.

The incubator includes a base 68 and a cover 70 separated by a suitable gasket 72. The base comprises a bottom wall 74, side walls 76 and 78, and end walls 80 and 82. The bottom wall 74 has a central opening 83 of substantially the same size and shape as the cover plate 56. The walls 74, 76, 78, 80, and 82 and the cover 70 are formed in layers and include an outer layer 84 of steel or wood or the like, a next intermediate layer 86 of an heat insulating material such as fiberglass, and an inmost layer 88 of stainless steel. With the intermediate layer of heat insulating material, the interior of the incubator is thermally insulated from its external atmosphere. The inmost stainless steel layer 88 is rounded to facilitate cleaning where the side and end walls meet the bottom wall. A window 89 may be provided in the cover 70 of the incubator.

Means for heating the interior of the incubator is provided. In one suitable form the heating means includes a first electrical heater wire coiled in a suitable ceramic carrier plate 92 positioned between the inmost stainless steel layer 88 and the intermediate heat insulating layer 86 of, for example, the side wall 76. A second similar heater wire 94 is coiled on a ceramic plate 96 in the opposite wall 78. The ends of the heater wire are preferably brought out of the incubator through its bottom wall 74 in any suitable fashion so that electrical connection may be made thereto. This connection is not shown. The ceramic plate which supports the heater wire may also be provided in the walls 80 and 82 if desired as shown, however, this is not necessary or critical herein. If uniform wall thickness is desired, however, the walls 80 and 82 may include a thicker layer of insulating material to compensate for the ceramic in walls 76, 78. A suitable conventional thermostat, represented schematically at 98, is connected in series with one of the heater wires, e.g. wire 90, inside of the incubator.

If desired, a heating coil may be mounted on the surface of the bottom wall 74 within the incubator instead of being mounted in the side or end walls of the incubator. Of course, any suitable arrangement for the heater wire may be employed.

Means for assisting in maintaining substantially uniform temperature distribution within the incubator 66 includes a conduit 108 which is secured to the wall 82 and has an inlet opening 110 to incubator near one edge of the wall and an outlet opening 112 from the incubator near the opposite edge of the wall. A conven-

tional cage suction blower 114 is mounted in the conduit 108 at the inlet end to the incubator. The blower 114 serves to blow air into the incubator through the opening 110 and to draw air out of the incubator through the outlet 112 whereby air is circulated through the incubator and a substantially uniform temperature distribution is achieved. It is preferable not to mount the conduit 108 in the same wall with the heating wire. Means are also provided for circulating outside air into the incubator. This means includes an aperture 114 in the conduit 108 and a sleeve rotatably mounted on the conduit and having a similar aperture 117 adapted to be aligned with the aperture 114 in the conduit when it is desired to draw outside air into the system.

Means are provided for supporting and shaking chemicals or the like within the incubator 66. This means includes a shaker table 118 which has upper end lower plane parallel surfaces 120 and 122. The shaker table 118 is secured to an upper bearing assembly which includes a plate 124 secured to the lower surface 122 of the shaker table and three sleeves 126, 128, and 130 which are secured to the lower surface 125 of the plate 124. The sleeves 126, 128, and 130 carry suitable bearings and are press fit on the eccentric studs 50, 52, and 54 of the shaft 38, 40, and 42, respectively. The upper surface 120 of the shaker table 118 is provided with suitable clamps or supports 138 by which chemical flasks or dishes 140 may be supported.

The plate 124 of the upper bearing assembly is of a shape similar to that of the opening 83 in the bottom wall 74 of the incubator 66 and it is slightly smaller in size than this opening. In addition, the shafts 38, 40, and 42 and the sleeves 126, 128, and 130 are of such a length that the plate 124 is positioned with its lower surface 125 at a slightly higher level than the inmost layer 88 of the bottom wall 74 of the incubator. According to the invention, a flexible corrugated boot shield 142 of rubber or the like is secured between the periphery of the plate 124 and the inner surface of the bottom wall 74 closely adjacent to the central opening therein. Thus, the interior of the incubator is completely sealed off from its surrounding environment so that all types of materials, including pathogenic organisms, could be safely contained therein.

Means are also provided for driving the shaker table 118. This means includes a large spoked pulley 144 secured to the lower end of the shaft 40 beneath the cross member 17. The pulley 144 is coupled by a belt 146 to a conventional variable speed pulley 148 which is coupled to a drive shaft 150 of a motor 151. According to the invention, operation of the variable speed pulley is achieved in the following fashion. The motor 151 is mounted at one end 152 of an elongated cross plate 153 which extends across the base support member 12 and is pivotally secured to the peripheral flange 14 at its other end 154 by a pin 156 around which the cross plate 153 may pivot. The motor shaft 150 extends through the cross plate 153 and carries the variable speed pulley 148 beneath the cross plate. The end 152 of the cross plate 153 adjacent to the motor 151 is provided with a curved rack 158 which meshes with a gear 160. The gear 160 carries a shaft which passes through a suitable bearing housing 164 and carries a calibrated hand wheel 166 at its end. Rotation of the hand wheel 166 pivots the cross plate 153 about the pin 156 and increases or decreases the distance between the pulley 144 and the variable speed pulley 148 to increase or decrease the speed of the pulley 144 and thereby to control the movement of the shaker table 118. With this control arrangement, a small range of movement of the handwheel 166 controls a large range of movement of the variable speed pulley and the entire operating range thereof may be achieved with no more than one complete rotation of the hand wheel. In other arrangements where the motor itself is moved rather than its support as in the present invention, similar ease of operation over a wide range of speeds is not possible to achieve.

According to the invention, in order to prevent the accumulation of hot air around the incubator, particularly near the bottom wall due to heat generated by the motor 151, fan blades 168 are secured to the spokes of the pulley and are formed to draw ambient air downwardly and away from the bottom wall 74 of the incubator and out through the bottom of the base support member 12.

A four-walled cover member 170 is provided enclosing the base support member 12 and extending upwardly toward the incubator 66 but terminating below the incubator to provide an annular space 172 therebetween. Air is drawn by the fan blades 168 into the cover 170 through the annular space 172 and out through the bottom of the base support member. Thus, ambient air is kept circulating.

What is claimed is:

1. A combination incubator-shaker including a stationary air-tight, sealed incubation chamber, a bottom wall in said chamber having an aperture, a plate covering said aperture and sealed in air-tight engagement to said bottom wall, drive means extending through said plate into the interior of said chamber, a support table secured to said drive means inside said chamber and adapted to be moved thereby, air-tight yieldable insulating means between said table and said bottom wall surrounding said aperture therein, thermal insulating material in the walls of said incubation chamber, said incubation chamber thus being sealed off and insulated from the external atmosphere whereby its contents may be maintained sterile and at a controlled temperature, conduit means coupled to said chamber for circulating a controlled atmosphere therethrough, and means outside of said chamber for circulating the atmosphere surrounding said chamber and thereby preventing the accumulation of heat surrounding said chamber.

2. A combination incubator-shaker including a stationary incubation chamber, a bottom wall in said chamber having an aperture, a plate covering said aperture and secured to said bottom wall, drive means sealed to said plate and extending from the exterior of said chamber into the interior thereof, a support table secured to said drive means inside said chamber and adapted to be rotated thereby, a yieldable insulating sealing means secured between said table and said bottom wall surrounding said aperture therein, heat insulation means in the walls of said chamber, said incubation chamber thus being sealed off and insulated from the external atmosphere whereby its contents may be maintained sterile and at a controlled temperature, and means outside of said chamber for circulating the atmosphere surrounding said chamber and thereby preventing the accumulation of heat near said chamber.

3. A combination incubator-shaker as defined in claim 1 wherein said means outside of said chamber comprises an air-circulating fan positioned beneath said chamber and adapted to cause the flow of air downwardly along the sides of said chamber and ultimately away from the chamber.

4. Incubator-shaker apparatus comprising a base support member; a balanced support assembly secured to said base support member; a cover plate secured to said support assembly, said cover plate having a peripheral flange; an air-tight, sealed incubator chamber having a bottom wall secured to said peripheral flange of said cover plate, said bottom wall having an opening of substantially the same size and shape as the area defined by said peripheral flange of said cover plate; said incubator also having side walls, end walls, and a top cover all of which include a layer of heat insulating material shielding the interior of said incubator from the external atmosphere; said incubator chamber being thus completely sealed off and insulated from the external atmos-

phere whereby its contents may be sterilized and may be retained in a sterile state at a controlled temperature; a shaker table mounted within said incubator and coupled to driving means mounted outside said incubator; a corrugated, flexible rubber-like shield secured between said shaker table and the bottom wall of said incubator inside said incubator; and means for circulating air around said incubator.

5. The apparatus defined in claim 4 and including means for heating the interior of said incubator mounted in the side walls thereof and means for circulating the atmosphere in said incubator coupled to the end walls thereof.

6. The apparatus defined in claim 4 wherein said driving means to which said shaker table is coupled includes an elongated plate pivotally secured at one end to said base support member and carrying a motor at its other end, a variable-speed pulley coupled to said motor, means for pivoting said plate secured to said other end thereof, and means coupling said variable-speed pulley to said shaker table.

7. A combination incubator-shaker including a stationary incubation chamber,

a bottom wall in said chamber having an aperture, a plate covering said aperture and secured to said bottom wall, drive means for a shaker table secured to said plate and extending from the exterior of said chamber into the interior thereof,

a support table secured to said drive means inside said chamber and adapted to be rotated thereby,

a yieldable gasket means lying between said drive means for said table and said bottom wall of said chamber and substantially blocking the aperture therein,

heat insulation means in the walls of said chamber, said incubation chamber thus being sealed off and insulated from external atmosphere whereby its contents may be maintained sterile and at a controlled temperature,

and means outside of said chamber for circulating the atmosphere surrounding said chamber and thereby preventing the accumulation of heat near said chamber.

References Cited in the file of this patent

UNITED STATES PATENTS

1,976,159	Bridge	Oct. 9, 1934
1,982,827	Olsen et al.	Dec. 4, 1934
2,152,492	Needels	Mar. 28, 1939
2,404,228	Hamlin	July 16, 1946
2,518,224	Clem et al.	Aug. 8, 1950
2,753,722	De Grave	July 10, 1956
2,774,248	De Moss	Dec. 18, 1956

OTHER REFERENCES

"Streptomycin," by Waksman, published by The Williams & Wilkins Co., Baltimore (1949), page 34 relied on.