Nov. 30, 1937. P. D. LOWELL 2,100,606

SUPERHETERODYNE RECEIVING SYSTEM

Filed July 25, 1933

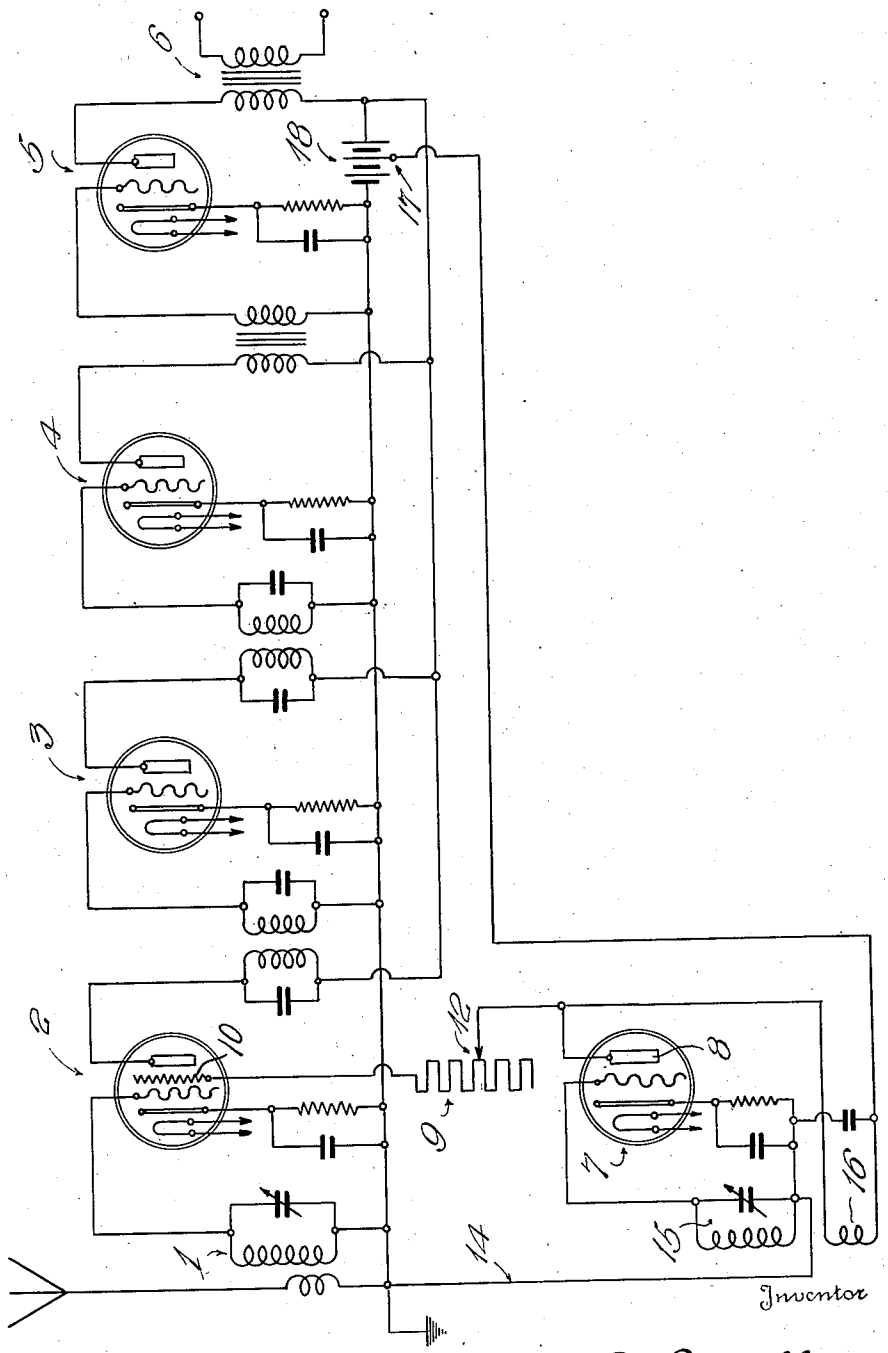

Inventor

Percival D. Lowell,

By John B Brady

Attorney

Patented Nov. 30, 1937

2,100,606

UNITED STATES PATENT OFFICE

2,100,606

SUPERHETERODYNE RECEIVING SYSTEM

Percival D. Lowell, Chevy Chase, Md., assignor to Radio Corporation of America, New York, N. Y., a corporation of Delaware

Application July 25, 1933, Serial No. 682,130

12 Claims. (Cl. 250—20)

My invention relates broadly to radio receiving systems and more particularly to an improved circuit arrangement for a superheterodyne type of radio receiver.

One of the objects of my invention is to provide a simple and efficient method of coupling the oscillator with the first detector circuit of a superheterodyne type of radio receiver.

Another object of my invention is to provide an improved method of assembly for superheterodyne types of radio receivers wherein the various elements may be arranged in any manner desired in the design of the receiver, and the oscillator positioned in the most convenient location from a mechanical viewpoint while obtaining the desired degree of coupling between the oscillator and the first detector circuit.

Still another object of my invention is to provide a circuit arrangement for a superheterodyne type of radio receiver including an oscillator and a first detector having means for selectively adjusting the amount of radio frequency energy fed into the first detector from the oscillator to the proper value for the best operation of the first detector.

A further object of my invention is to provide a circuit arrangement for a superheterodyne type of radio receiver whereby the coupling between the oscillator and the first detector is maintained substantially constant independent of frequency variations thereby obtaining maximum response of the receiver over the wide band of signaling frequencies.

A still further object of my invention is to provide a superheterodyne type of radio receiver employing a screen grid tube as the first detector and an electron tube oscillator in combination with means for establishing an electron coupling between the electron tube oscillator and the first detector.

Another object of my invention is to provide a circuit arrangement for a superheterodyne type of radio receiver in which the high frequency oscillator is coupled to the first detector of the superheterodyne receiver through a non-inductive resistance.

A further object of my invention is to provide a superheterodyne type of radio receiving circuit in which the high frequency oscillator is connected with a screen grid type of first detector and in which the relationship of screen grid potential on the first detector and the plate potential on the oscillator is such that the same source of potential may be employed for energizing both the oscillator plate and the first detector screen grid.

Other and further objects of my invention reside in a constant coupling system for the oscillator and first detector of a superheterodyne type of radio receiver, as set forth more fully in the specification hereinafter following by reference to the accompanying drawing which diagrammatically illustrates a preferred form of my invention.

My invention is directed particularly to superheterodyne types of radio receiver circuits and provides a novel, simple and efficient method of obtaining the desired coupling between the oscillator and the first detector circuit. The common method now generally used wherein the two circuits are directly electromagnetically coupled together is not entirely satisfactory, due mainly to structural positions because the inductance coils of the two circuits must either be positioned adjacent to one another or else additional exterior means of magnetic coupling must be provided. It would be desirable to arrange the oscillator and first detector circuits in a similar manner and symmetrical with the other elements of the receiver such as the radio frequency and intermediate frequency elements. Heretofore, various types of coupling circuits employing capacity and inductance elements between the oscillator and first detector of the superheterodyne receiver have been provided but in such systems, the amount of energy transferred from the oscillator to the first detector has varied with frequency.

My invention provides for an arrangement wherein the various elements of the superheterodyne receiver may be arranged in any manner desired and then the oscillator to first detector coupling inserted afterward and the amount of coupling adjusted to the proper value without disturbing the other portions of the receiver circuit. The coupling circuit of my invention provides means for effecting the transfer of a constant amount of energy from the oscillator to the first detector independent of changes in frequency. The circuit provides means in a superheterodyne receiver for adjusting the amount of radio frequency energy transferred by the oscillator to the first detector to the proper value for the best operation of the first detector.

In order to clarify my invention, I have omitted the usual radio frequency amplifier normally connected between the antenna circuit 1 and the first detector 2. The drawing diagrammatically shows a superheterodyne type of receiver circuit including the antenna circuit 1, the first detector

2, the intermediate amplifier 3, the second detector 4, the audio frequency amplifier 5, the audio frequency output circuit 6 and oscillator 7. I have illustrated the heater type of tube employed throughout the several stages of the receiver and oscillator and in the first detector, I employ a screen grid type of tube.

Coupling between the oscillator 7 and first detector 2 is provided by connecting the plate 8 of the oscillator 7, through non-inductive resistance 9, to the screen grid 10 of the first detector 2. An adjustable tap 12 is provided on non-inductive resistance 9 for varying the effective value of the resistance between the plate of oscillator 8 and the screen grid 10 of first detector 2. The non-inductive resistance 9 has a maximum value of the order of 500 ohms. By varying the value of the resistance 9, the proper degree of coupling will readily be found. The value of the plate voltage used on the plate of the oscillator is chosen so as to be the proper voltage for the screen grid 10 of the first detector 2, because it will be seen that the plate voltage of the oscillator is also substantially the same as that of the screen grid of the detector. That is to say, the oscillator plate potential is obtained from the main plate supply and the screen grid potential of the first detector is derived therefrom, as determined by the selected value of resistance 9.

The high frequency oscillator 7 is so arranged with respect to the first detector 2 that high frequency oscillations are impressed upon the first detector 2 through the electron coupling obtained by the connection of the output of the oscillator circuit through lead 14 extending from one side of tuned circuit 15 of the oscillator to one side of the circuit constituting the first detector and through the non-inductive resistance 9 to the screen grid 10. The plate circuit of the oscillator 7 extends through inductance 16 which is coupled with the inductance of tuned circuit 15 to the tap 17 on the main source of plate potential 18 of the radio receiver. The coupling between the high frequency oscillator 7 and the first detector 2 is effected through the electron stream in the first detector 2. The amplitude of the energy supplied to the first detector from the oscillator is adjusted by movement of tap 12 along non-inductive resistance 9 and at the same time, the potential on screen grid 10 is determined.

I have found the circuit arrangement of my invention highly effective in operation and while I have described one of the preferred embodiments of my invention, I desire that it be understood that modifications may be made and that no limitations upon my invention are intended other than are imposed by the scope of the appended claims.

What I claim as new and desire to secure by Letters Patent of the United States is as follows:

1. In a superheterodyne receiver, an oscillator circuit including a plate electrode, a first detector circuit including a screen grid, a resistance connected directly between the oscillator plate and the screen grid of the first detector for providing a coupling path between the oscillator and first detector circuits.

2. In a superheterodyne receiver, an oscillator circuit including a plate electrode, a first detector circuit including a screen grid, a conductive connection from one side of said oscillator circuit to one side of said detector circuit, and a conductive connection between the plate electrode of said oscillator and the screen grid electrode of said first detector.

3. In a superheterodyne receiver, an oscillator circuit including a plate electrode, a first detector circuit including a screen grid, a source of plate potential for said oscillator circuit, a conductive connection from one side of said oscillator circuit to one side of said first detector circuit, and a conductive connection between the plate electrode of said oscillator and the screen grid of said first detector, said last mentioned conductive connection providing a path for high frequency currents and providing means for impressing potential from said source of plate potential to the screen grid of said first detector.

4. In a superheterodyne receiver, an oscillator circuit including a plate electrode, a first detector circuit including a screen grid, a source of plate potential for said oscillator circuit, a conductive connection from one side of said oscillator circuit to one side of said first detector circuit, and a conductive connection between the plate electrode of said oscillator and the screen grid of said first detector, said last mentioned conductive connection including an adjustable resistance and providing a path for regulating the flow of high frequency energy from said oscillator circuit to the said first detector circuit and also providing a path for impressing bias potential upon said screen grid from said source of plate potential.

5. In a superheterodyne receiver, an oscillator circuit including a plate electrode, a first detector circuit including a screen grid, a source of plate potential for said oscillator circuit, a conductive connection from one side of said oscillator circuit to one side of said first detector circuit, and a conductive connection between the plate electrode of said oscillator and the screen grid of said first detector, a non-inductive resistance disposed in said last mentioned connection and providing a path for the transfer of high frequency oscillations from said oscillator circuit to the screen grid of said first detector circuit while simultaneously providing means for impressing a bias potential on said screen grid electrode of said first detector from said source of plate potential.

6. In a superheterodyne receiver, an oscillator circuit including a plate electrode, a first detector circuit including a screen grid, a source of plate potential for said oscillator circuit, a conductive connection from one side of said oscillator circuit to one side of said first detector circuit, and a conductive connection between the plate electrode of said oscillator and the screen grid of said first detector, a non-inductive resistance disposed in said last mentioned connection, and an adjustable tap on said non-inductive resistance for controlling the effective resistance in said last mentioned connection and regulating the amount of high frequency energy supplied by said oscillator to said first detector while controlling the potential impressed upon said screen grid from said source of plate potential.

7. In a superheterodyne receiver, a high frequency oscillator circuit including a plate electrode and a source of plate potential, a first detector circuit including a screen grid electrode, and means for establishing an electronic coupling between said first detector circuit and said high frequency oscillator circuit comprising a conductive connection between one side of said oscillator circuit and said first detector circuit and a connection between the plate electrode of said high frequency oscillator circuit and the screen grid of said first detector.

8. In a superheterodyne receiver, a high frequency oscillator circuit including a plate electrode and a source of plate potential, a first detector circuit including a screen grid electrode, means for establishing an electronic coupling between said first detector circuit and said high frequency oscillator circuit comprising a conductive connection between one side of said oscillator circuit and said first detector circuit and a connection between the plate electrode of said high frequency oscillator circuit and the screen grid of said first detector, and a variable resistance element included in said last mentioned connection for regulating the amount of high frequency energy supplied from said high frequency oscillator to said first detector while controlling the potential impressed upon said screen grid from said source of plate potential.

9. In a superheterodyne receiver, a high frequency oscillator circuit including a plate electrode and a source of plate potential, a first detector circuit including a screen grid electrode, means for establishing an electronic coupling between said first detector circuit and said high frequency oscillator circuit comprising a conductive connection between one side of said oscillator circuit and said first detector circuit and a connection between the plate electrode of said high frequency oscillator circuit and the screen grid of said first detector, and a non-inductive resistance element included in said last mentioned connection for regulating the amount of high frequency energy supplied from said high frequency oscillator to said first detector while controlling the potential impressed upon said screen grid from said source of plate potential.

10. A radio receiver comprising a plurality of circuits each of which has a space discharge device associated therewith, one of said space discharge devices being connected to act as a local oscillator and another of said space discharge devices being connected to act as a first detector, said first detector including a screen grid positioned between the control grid and the anode, and direct current paths connected from the anode and the cathode of said local oscillator to said first detector for impressing an alternating potential on said screen grid.

11. In a superheterodyne receiver, an oscillator circuit including an electronic tube having a plate electrode, a first detector circuit including an electronic tube having a screen grid, a variable non-inductive resistance element having a maximum value of the order of 500 ohms connected directly between the oscillator plate and the screen grid of the first detector for providing a coupling path between the oscillator and first detector circuits.

12. In a superheterodyne receiver, a first detector circuit including an electronic tube provided with an anode, a cathode and at least two grid electrodes, a source of signaling energy, an input circuit for said tube connected between one of said grid electrodes and the cathode thereof and including means for coupling said input circuit to said source of signaling energy, an output circuit for said tube including a connection between the anode thereof and the cathode, said connection including a source of plate potential, an oscillator circuit including an electronic tube having an anode, a cathode and a control electrode, means connecting the last named cathode to the first named cathode, means connecting the last named anode to said source of plate potential and a connection between the other grid electrode of the first named tube and the last named anode, said connection including a variable non-inductive resistor element, said resistor element providing a coupling path between the oscillator and first detector circuits.

PERCIVAL D. LOWELL.