J. SCHWERTNER.

AUTOMATIC PLAYING INSTRUMENT.

APPLICATION FILED JUNE 5, 1911.

1,080,595.

Patented Dec. 9, 1913.

5 SHEETS—SHEET 1.

Fig. 1

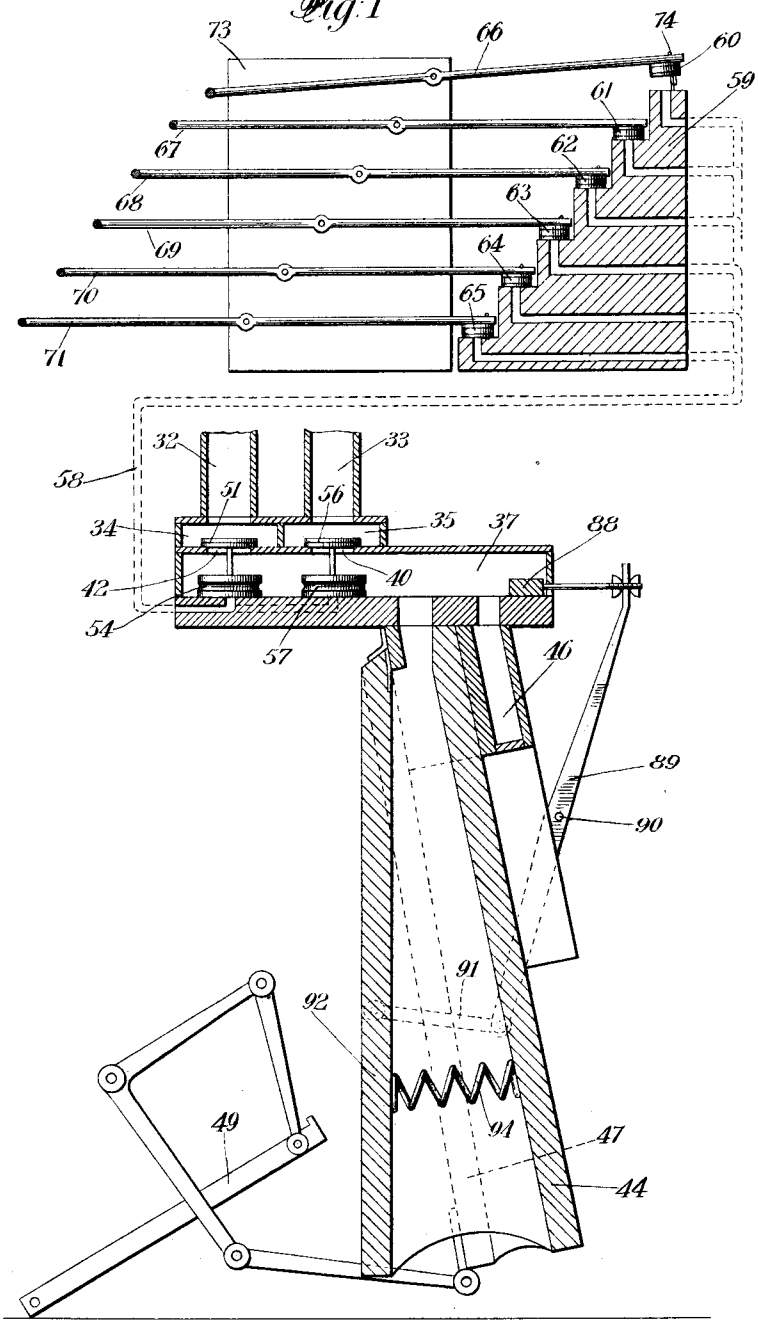

Witnesses:

Marie M. Rottenberger

Lillian A. Fredsall

Inventor

Joseph Schwertner

By his Attorneys

Kenyon & Kenyon

COLUMBIA PLANOGRAPH CO., WASHINGTON, D. C.

J. SCHWERTNER.

AUTOMATIC PLAYING INSTRUMENT.

APPLICATION FILED JUNE 5, 1911.

1,080,595.

Patented Dec. 9, 1913.

5 SHEETS—SHEET 2.

Fig. 2

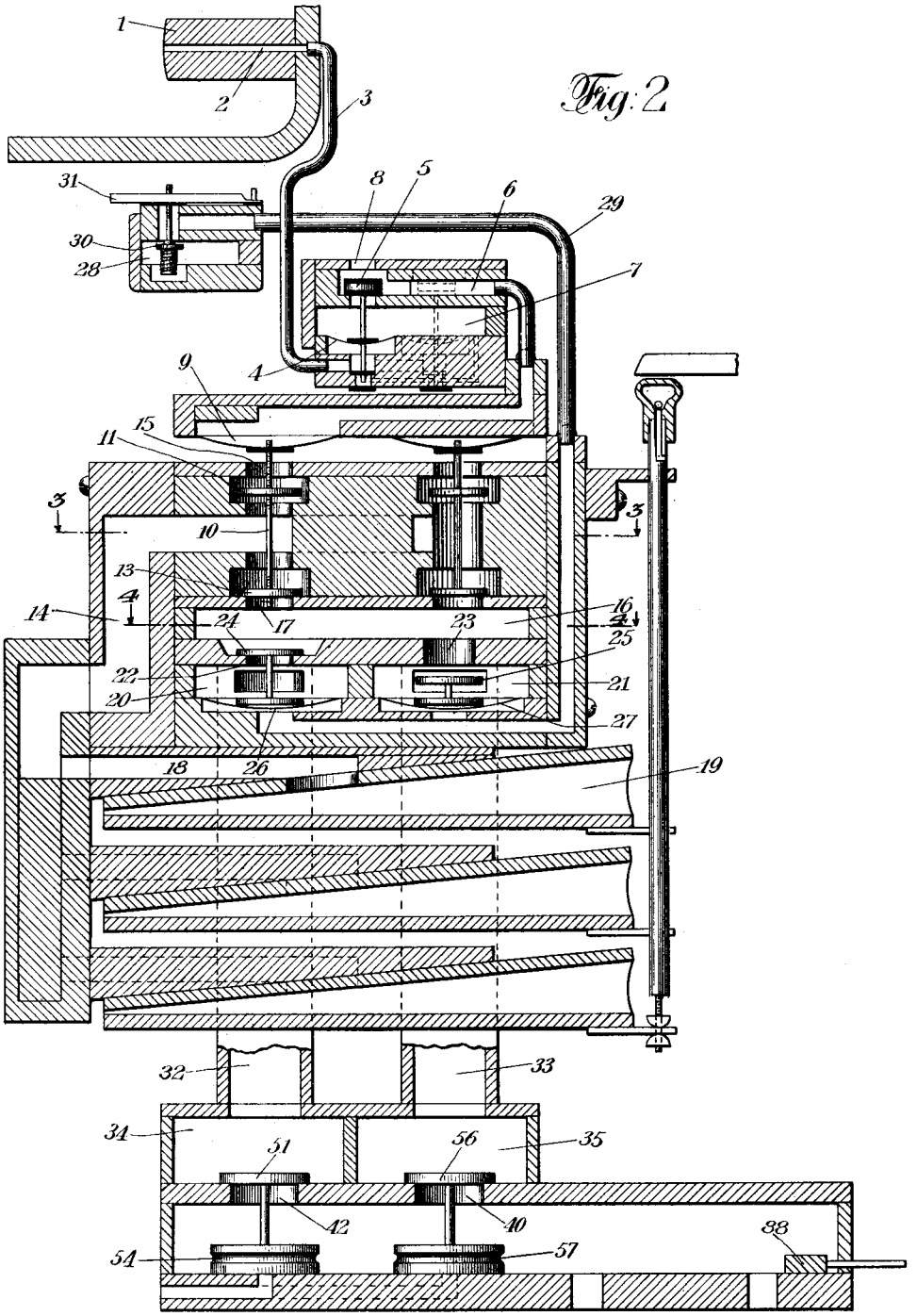

Witnesses:
Marie M. Rothenberger.
Lillian A. Fredeall.

Inventor
Joseph Schwertner
By his Attorneys
Kenyon & Kenyon

COLUMBIA PLANOGRAPH CO., WASHINGTON, D. C.

J. SCHWERTNER.

AUTOMATIC PLAYING INSTRUMENT.

APPLICATION FILED JUNE 5, 1911.

1,080,595.

Patented Dec. 9, 1913.

5 SHEETS—SHEET 3.

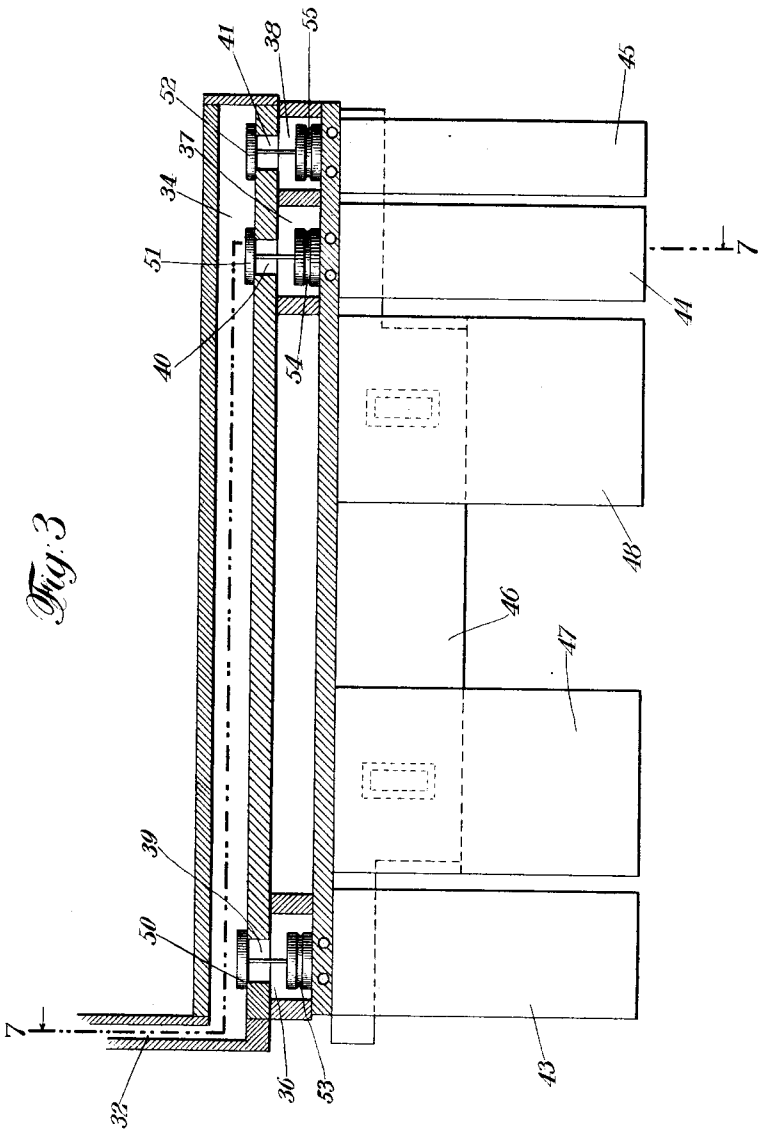

Fig. 3

Witnesses:
Marie G. Rothenberger,
Lillian A. Fredeall.

Inventor
Joseph Schwertner
By his Attorneys
Kenyon & Kenyon

COLUMBIA PLANOGRAPH CO., WASHINGTON, D. C.

J. SCHWERTNER.

AUTOMATIC PLAYING INSTRUMENT.

APPLICATION FILED JUNE 5, 1911.

1,080,595.

Patented Dec. 9, 1913.

5 SHEETS—SHEET 4.

Fig. 4

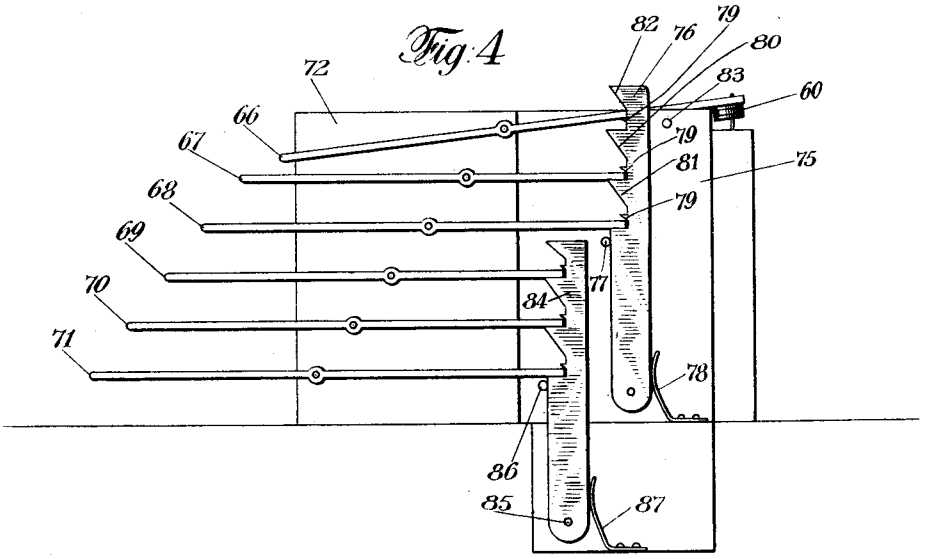

Fig. 5

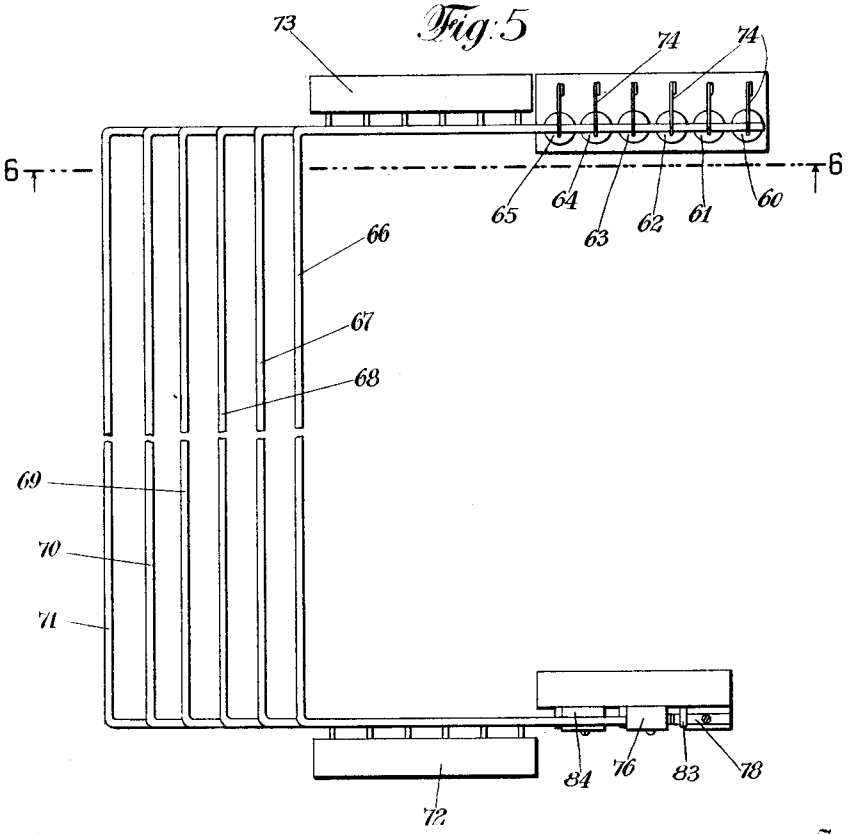

Witnesses:
Marie M. Rothenberger.
Lillian Q. Fredeall

Inventor
Joseph Schwertner
By his Attorneys
Kenyon & Kenyon

COLUMBIA PLANOGRAPH CO., WASHINGTON, D. C.

J. SCHWERTNER.

AUTOMATIC PLAYING INSTRUMENT.

APPLICATION FILED JUNE 5, 1911.

1,080,595.

Patented Dec. 9, 1913.

5 SHEETS—SHEET 5.

Fig: 6

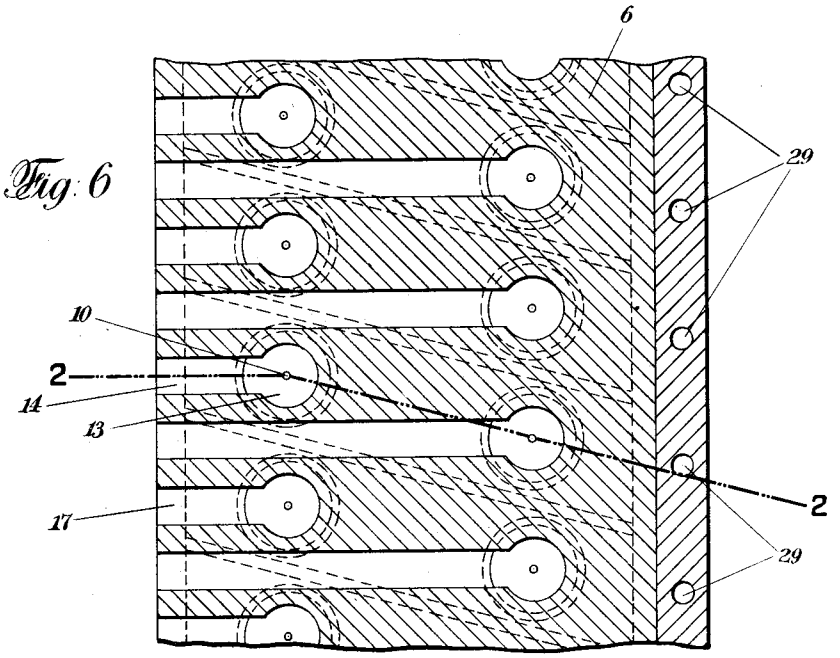

Fig: 7

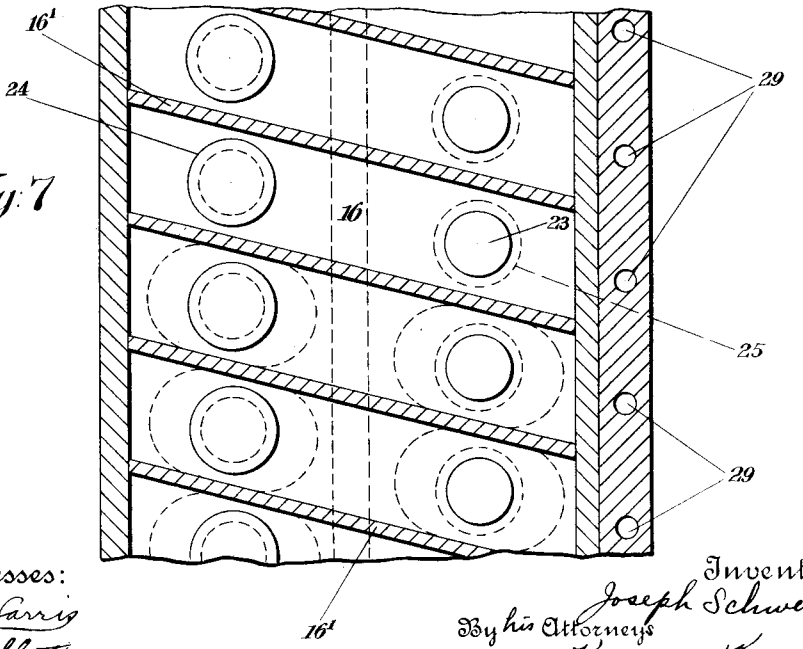

Witnesses:
Geo. M. Harris
George Schlatt,

Inventor
Joseph Schwertner
By his Attorneys
Kenyon & Kenyon

COLUMBIA PLANOGRAPH CO., WASHINGTON, D. C.

UNITED STATES PATENT OFFICE.

JOSEPH SCHWERTNER, OF NEW YORK, N. Y., ASSIGNOR, BY DIRECT AND MESNE ASSIGNMENTS, TO HEERWAGEN COMPANY, A CORPORATION OF NEW YORK.

AUTOMATIC PLAYING INSTRUMENT.

1,080,595. Specification of Letters Patent. Patented Dec. 9, 1913.

Application filed June 5, 1911. Serial No. 631,409.

To all whom it may concern:

Be it known that I, JOSEPH SCHWERTNER, a citizen of the United States, and a resident of New York, county of New York, and State of New York, have invented certain new and useful Improvements in Automatic Playing Instruments, of which the following is a specification.

My invention relates to improvements in musical instruments, and is more especially directed to improvements in automatic pianos and the like.

Various of the improvements herein claimed, were shown and described in my prior application, Serial No. 535,585, filed December 30th, 1909, for automatic playing instruments.

One object of my invention is to provide an especially simple and efficient means for controlling and regulating the volume of music being played and also the relative volume of the accompaniment, and notes being accented.

Various other objects, features and advantages will more clearly appear from the detailed description given below, taken in connection with the accompanying drawings which form a part of this specification.

Referring to the drawings, Figure 1 is a vertical section partially diagrammatic, showing the control and main operating parts for producing variable air pressures or tensions. Fig. 2 is a similar section through the main operating parts of the automatic pneumatic apparatus on the line 2—2 of Fig. 6. Fig. 3 is a view at right angles to Fig. 1, partially in section, and with the control apparatus omitted. Fig. 4 is a side view of the control apparatus shown in Fig. 1. Fig. 5 is a top plan view of the control apparatus shown in Fig. 1. The section of the control apparatus shown in Fig. 1 is taken on a line 6—6 of Fig. 5. The section of the main operating parts shown in Fig. 1 is taken on the line 7—7 of Fig. 3. Fig. 6 is a transverse section through the main operating parts on the line 3—3 of Fig. 2, and Fig. 7 is a transverse section through the main operating parts on the line 4—4 of Fig. 2.

Referring to Fig. 2, 1 represents a tracker board with tracker ducts 2. The tracker board 1 is of any usual construction over which the perforated music sheet passes in any well known manner. The ducts 2 connect with wind ducts 3, which lead to primary pneumatics 4. Primary pneumatics 4 operate valves 5 so as to connect wind passages 6 with the exhaust in wind trunk 7, and close the wind passages 6 to the atmosphere at 8. The air being exhausted from wind passages 6, it is exhausted from the secondary pneumatic 9, so that the secondary pneumatic 9 raises the spindle 10 with its valve closures 11 and 13. This closes the wind passage 14 to the atmosphere at 15, and opens it to the wind chest 16 at the port 17. The raising of the valve closure 13 allows the air to be exhausted from the wind passage 14, and thence through the wind passage 18, exhausts the operating or power pneumatic 19, which operates the usual striker to set in motion the operating mechanism of the piano or other instrument, in any well known manner.

For varying the suction within the chest 16, I provide two wind trunks 20 and 21. Openings or ports 22 and 23 lead from the wind chest 16 to the wind ducts 20 and 21 respectively, and these openings are designed to be closed by valve closures 24 and 25 respectively. The valve closures 24 and 25 are operated by pneumatics 26 and 27 respectively.

28 represents a wind trunk from which the air is exhausted, and 29 is a duct leading from both of the pneumatics 26 and 27, to the wind trunk 28. The valve closure 30 is adapted, by means of a lever 31, to close the duct 29 to the wind trunk 28, and open the duct 29 to the atmosphere.

Ordinarily there exist different degrees of suction or exhaust in the wind trunks 20 and 21. To provide different degrees of suction or exhaust in these wind trunks, they are exhausted through wind passages 32 and 33, respectively. The wind passages 32 and 33 terminate in chests 34 and 35, respectively, these parts forming extensions of the wind trunks 20 and 21. Below the wind chests 34 and 35 there are arranged three wind chests or chambers 36, 37 and 38. Each wind chamber, 36, 37 and 38, has an opening to the chest 34 and also an opening to the chest 35. Thus there are three openings 39, 40 and 41 (see also Fig. 3) leading from the chest or trunk 34 into the chambers 36, 37 and 38, respectively. Likewise there are three openings leading from the chest or

trunk 35 into the chambers 36, 37 and 38 respectively, only one, 42, of which is shown. Connected with the chamber 36 is a bellows 43, with the chamber 37 a bellows 44, and with the chamber 38 a bellows 45. Each of these bellows 43, 44 and 45, are exhausted through a wind box 46. The wind box 46 has passages leading into each of the chambers 36, 37 and 38. The air is exhausted from the wind box 46, in any well known manner, as by means of treadle bellows 47 and 48, and treadles 49.

For opening and closing the ports 39, 40 and 41, I provide valve closures 50, 51 and 52, operated by pneumatics 53, 54 and 55, respectively. Similarly, I provide three valve closures for opening and closing the ports leading from the chest 35 to the chambers 36, 37 and 38, respectively. One of these valve closures, 56, is shown. These valve closures are operated by three pneumatics, one of which is shown at 57. It will therefore appear that there are six valve closures similar to 50, &c., with their corresponding operating pneumatics, similar to 53, &c. For causing the operation of these pneumatics I provide six ducts 58, which lead into a block 59, as shown in Fig. 1. For closing the ends of these ducts or passages I provide six valve closures 60, 61, 62, 63, 64 and 65. These valve closures are carried on the ends of lever members 66, 67, 68, 69, 70 and 71, respectively. The lever members 66 to 71 inclusive, are suitably pivotally mounted on blocks 72 and 73, and each of these lever members is bent in a U shape, as shown in Fig. 5. Springs 74 normally force the valve closures 60, 61, &c. downwardly to close the ends of the ducts 58. Pivotally mounted to a block 75 is a cam member 76, normally forced against a stop 77, by a spring 78. One end of each of the lever members 66, 67 and 68, engages the cam member 76, as shown in Fig. 4. The cam member 76 is provided with three locking projections 79. If now, referring to Fig. 4, one of the lever members 66, 67 or 68, be pressed downwardly at its outer end, its right hand end will move upwardly and will engage the underneath cam surface on the projection 79, and force the member 76 to the right, until the right hand end of the member passes above the projection 79; whereupon the spring 78 will force the member 76 back into its normal position, and thus lock the member, as 66 with its valve closure 60, in its raised position, as shown in Fig. 1. If now, it is desired to throw the member 67, its left hand end is pushed downwardly, thereby causing the right hand end to move upwardly as already described. This forces the member 76 to the right, and it may force it sufficiently to the right to release the member 66. If it does not, however, the member 67 only needs to be pushed downwardly a slight distance farther, when its right hand end will engage the cam surface 80, and force the member 76 to the right sufficiently to allow the member 66 to be thrown to its original position. In a similar manner the lever member 68 may be operated, and if necessary, forced against the cam surface 81 in order to automatically release either of the other members 66 or 67, as the case may be. The member 76 is also provided with a cam surface 82, against which the member 66 may operate in order to automatically release either of the members 67 or 68. The stop 83 prevents the member 76 from going too far in the right hand direction. In a similar manner I provide a cam member 84 pivoted at 85, and normally held against the stop 86, by a spring 87. This cam member 84 has similar projections and cam faces, with which the lever members 69, 70 and 71 coöperate in a similar manner. Thus if the lever member 69 be pushed downwardly to raise its valve closure, and locked in that position, and then it is desired to operate either of the other members 70 or 71, they need only be pressed downwardly, when their inner end or ends will engage their respective cam faces, on the members 84, and release the member 69, to return it to its normal position, under the action of its spring 74. Thus when either of the lever members 69, 70 or 71, is operated it will automatically release any other of the members 69, 70 or 71, which may have been placed in operative position before.

In order that a definite pressure may be maintained in the chambers 36, 37 and 38, each is provided with a valve closure 88, for closing the opening between the chest and the wind box 46. (See Fig. 1). These valve closures 88 are operated by means of lever members 89, pivoted as at 90, which lever members are connected by means of links 91, to the movable member 92 of the bellows 43, 44 and 45, as the case may be. A spring as at 94, is provided for each bellows, to normally distend the same. When a definite amount of exhaust has been produced in these bellows, and likewise within the wind chests or chambers 36, 37 and 38, the suction is great enough to overcome the spring 94, whereupon the bellows collapse against the action of the spring 94, and thereby move the lever member 89, to force the valve closure 88, to close the connection between the wind box 46 and the chest. By providing different strengths of springs 94, for the different bellows 43, 44 and 45, a different degree of suction or exhaust may be provided in each chamber 36, 37, and 38.

The operation of the apparatus may be described as follows: Upon an aperture in the perforated music sheet coming opposite one of the ducts 2, atmospheric air is ad-

mitted to the duct 3, thereby causing the suction within the trunk 7 to operate the primary pneumatic 4, raise the valve closure 5, to close the opening 8, and produce exhaust within the passage 6. This causes the operation of the secondary pneumatic 9 to raise the valve closures 11 and 13, to close the opening 15. This also, by the raising of the valve closure 13, connects the passage 14 with the wind chest 16, so as to allow the corresponding primary pneumatic to be exhausted, to cause the corresponding speaking device to be sounded. The wind chest 16 may be exhausted from either of the trunks 20 or 21. As shown in Fig. 2, it is exhausted from the trunk 21. If it is desired that it be exhausted from the trunk 20, the lever 31 is raised, whereupon exhaust is produced in the duct 29, to operate the pneumatics 26 and 27, thereby raising the valve closures 24 and 25, to close the opening at 23, and open the opening 22. The wind trunk 20 is exhausted through the passage 32, from the chest 34, which in turn is exhausted through either of the ports 39, 40 or 41, from either one of the corresponding chambers 36, 37 or 38. If it is desired that the speaking device be sounded with relatively small volume, the chest 34 is exhausted through the passages 41, by the operation of the pneumatic 55, this pneumatic 55 being operated by the raising of the valve closure 60, and the relatively small exhaust controlled in the chamber 38 being controlled by the bellows 45. If it is desired to operate the sounding device so as to cause it to speak with increased volume, the pneumatic 54 is operated by raising the valve closure 61. The raising of the valve closure 61 automatically releases the valve closure 60, to return the pneumatic 55 to its normal position, as already described. The operation of the valve closure 54 causes the medium exhaust to be produced within the chest 34, whereupon the power pneumatic is operated with increased force, to cause the speaking device to sound the note with increased volume. If it is desired to cause the speaking device to sound the note with its greatest volume, the pneumatic 53 is operated, by raising the valve closure 62, in a similar manner. This automatically causes either of the valve closures 51 or 52 to drop to their seats, as already described, if they should happen to be already in raised position. Whereupon, the chest 34 is exhausted with maximum suction, so that the power pneumatic is operated with its greatest force, to give the note its strongest volume. It will therefore appear that by means of the three lever members 66, 67 and 68, any one of three different degrees of suction or exhaust may be produced within the wind trunk 20, and consequently the note may be struck with any one of three different degrees of force. In a similar manner, by the operation of the lever members 69, 70 and 71, any one of three different degrees of exhaust may be produced within the wind trunk 21, by the operation of the pneumatics, similar to 57, and their valve closures, similar to 56.

It will be understood of course, that there is a power pneumatic corresponding to each speaking device, and each power pneumatic may be fed from a separate wind chest at 16, or, I preferably supply two adjacent power pneumatics from a single chest at 16, that is, I preferably provide a long chest 16, divided into air tight compartments by walls 16′, each compartment supplying two power pneumatics, corresponding to adjacent speaking devices, that is, speaking devices differing by a semi tone. Such an arrangement is fully described in my prior application for United States Letters Patent, Serial Number 614,593, filed March 15th, 1911. It will be understood that each compartment of the chest 16, is provided with its corresponding valve closures 24 and 25, for connecting the same either to the trunk 20 or the trunk 21, and that there is a duct 29 and controlling lever 31 also, for each compartment of the chest 16, so that if we consider that the passage 33 is intended to provide low degrees of suction or exhaust for the accompaniment notes, and the passage 32 is intended to provide high degrees of suction or exhaust, for the accented notes, then by raising the lever members 31, corresponding to the notes to be accented, the particular power pneumatic corresponding to these notes, will be provided with suction through the passage 32, by the operation of the pneumatics 26, while the power pneumatics corresponding to the accompaniment notes will be provided with exhaust through the passage 33, because the corresponding pneumatics 27 are not operated to raise the valve closures 25, since the lever members 31, corresponding to these, are not raised. It will therefore appear that by regulating and raising certain of the lever members 31, I can select the notes to be accented and the notes to be used for accompaniment. The raising of the levers 31 may be done in any well known manner, but preferably by an apparatus, as shown and described in my prior application for United States Letters Patent Ser. No. 624,038, filed April 29, 1911. It will also appear that by manually operating any one of the three lever members 66, 67 and 68, the volume of the accented notes may be varied as desired, and by operating either one of the levers 69, 70 and 71, the volume of the accompaniment notes may be varied as desired. It will further appear that upon the operation of either one of the lever members 66, 67 or 68, any other of the valve closures 60, 61 or 62, which happens to be raised will

be automatically returned to its normal position so as to automatically shut off the corresponding exhaust or suction from the wind truck 20. Likewise, upon the operation of either of the valve closures 63, 64 or 65, any other one of these valve closures which happens to be raised will be returned to its normal position so as to automatically shut off the corresponding exhaust from the wind trunk 21.

Although I have described my improvements in great detail, nevertheless I do not desire to be limited to such details, except as clearly pointed out in the appended claims, since many changes and modifications may well be made without departing from the spirit and scope of my invention in its broadest aspects.

However, having fully and clearly described my improvements, what I claim as new and desire to secure by Letters Patent is:

1. In an apparatus of the class described, means for producing three variable pressures or tensions, means for causing a note to be sounded with any one of said pressures or tensions, said last mentioned means embracing three movable members, the movement of each of which causes the note to be sounded with one of said pressures or tensions, and means for automatically causing a return movement of one of said members, when another is operated.

2. In an apparatus of the class described, two air bellows, means for producing one degree of pressure or tension in one bellows and another degree of pressure or tension in the other bellows, means for causing a note to be sounded with either of said pressures or tensions, said last mentioned means including two movable members, one for throwing into operation one pressure or tension, and the other for throwing into operation the other pressure or tension, means whereby said members are held in their thrown position, and means for automatically returning either of said members when the other is moved.

3. In an apparatus of the class described, means for producing a plurality of different air pressures or tensions, and means for causing a note to be sounded with either of said air pressures or tensions, said last mentioned means including a plurality of movable controlling members, one for each air pressure or tension, whereby when one controlling member is moved one air pressure or tension is thrown into operation, and when another controlling member is moved another air pressure or tension is thrown into operation, and means for automatically causing a return movement of either of said controlling members when another of said controlling members is moved.

4. In an apparatus of the class described, means for producing three different air pressures or tensions, and means for causing a note to be sounded with either of said air pressures or tensions, said last mentioned means including three hand operated movable controlling members, one for each air pressure or tension, whereby when one controlling member is moved one air pressure or tension is thrown into operation, and when another controlling member is moved another air pressure or tension is thrown into operation, means whereby when either of said controlling members is moved to throw its pressure or tension into operation, it is automatically held in its thrown position, and means for automatically releasing either of said controlling members when another of said controlling members is moved.

5. In an apparatus of the class described, means for producing three different air pressures or tensions, and means for causing a note to be sounded with either of said air pressures or tensions, said last mentioned means embracing a plurality of controlling members, one for throwing each of said pressures or tensions into operation.

6. In a device of the class described, three air bellows, means for producing one degree of pressure or tension in one bellows and other degrees of pressure or tension in the other bellows, a wind chest, means for throwing said wind chest into connection with one of said bellows, means for throwing the wind chest into connection with any other of said bellows, and means for automatically throwing said wind chest out of connection with one of said bellows when it is thrown into connection with any other of said bellows.

7. In a device of the class described, having suitable power pneumatics, three air bellows, means for producing a different air pressure or tension in each bellows, a wind chest for feeding the power pneumatics, means for throwing said wind chest into connection with any of said bellows, to produce different air pressures or tensions in said chest, and means for automatically throwing said chest out of connection with any one of said bellows when it is thrown into connection with any other of said bellows.

8. In a musical instrument, two air bellows, means for producing one degree of pressure or exhaust in one bellows and another degree of pressure or exhaust in the other bellows, a wind chest, a separate valve for connecting each bellows with said wind chest, a separate pneumatic for operating each valve, and means for controlling the operation of said operating pneumatics.

9. In a musical instrument, suitable power

pneumatics, two air bellows, means for producing one degree of pressure or exhaust in one bellows and another degree of pressure or exhaust in the other bellows, a wind chest for supplying said power pneumatics, a valve for connecting each bellows with said wind chest, a pneumatic for operating each valve, and means for controlling the operation of said operating pneumatics, and means for automatically causing a return movement of one of said operating pneumatics responsive to the operation of the other.

10. In a musical instrument, suitable power pneumatics, a plurality of air chambers, means for producing a different degree of pressure or exhaust in each chamber, two wind trunks for feeding the power pneumatics, means for connecting the wind trunks with the chambers, said means embracing a plurality of valves, a pneumatic for operating each valve, and means for manually controlling the operation of said operating pneumatics, and means for automatically causing a return movement of one of said valves when another is operated.

11. In a musical instrument, suitable power pneumatics, two wind trunks for supplying said pneumatics, two wind chambers for one wind trunk for feeding the same, means for producing a different degree of pressure or tension in each of said chambers, a valve for connecting each compartment with its wind chest, and means for automatically closing one valve when the other is operated.

12. In a musical instrument, suitable power pneumatics, two wind trunks for supplying said pneumatics, two wind chambers for one wind trunk for feeding the same, means for producing a different degree of pressure or tension in each of said chambers, a valve for connecting each chamber with its wind trunk, a pneumatic for operating each valve, means for manually controlling the operation of said operating pneumatics, and means for automatically closing one valve when the other is operated.

13. In a musical instrument, suitable power pneumatics, two wind trunks for supplying said pneumatics, a plurality of wind chambers for supplying said wind trunks whereby each trunk may be supplied with a plurality of different pressures or exhausts, a valve for closing the connection from each compartment to each wind chest, and means for automatically closing one valve when another valve to the same wind trunk is opened.

14. In a musical instrument, suitable power pneumatics, two wind trunks for supplying said pneumatics, a plurality of wind chambers for supplying said wind trunks whereby each chest may be supplied with a plurality of different pressures or exhausts, a valve for closing the connection from each chamber to each wind trunk, a pneumatic for operating each valve, and means for automatically closing one valve when another valve to the same wind trunk is opened.

15. In a musical instrument, suitable power pneumatics, two wind trunks for supplying said pneumatics, three wind chambers for supplying said wind trunks whereby each trunk may be supplied with a plurality of different pressures or exhausts, a valve for closing the connection from each chamber to each wind trunk, and means for automatically closing one valve when another valve to the same wind trunk is opened.

16. In a musical instrument, suitable power pneumatics, two wind trunks for supplying said pneumatics, a plurality of wind chambers for supplying said wind trunks whereby each trunk may be supplied with three different pressures or exhausts, a valve for closing the connection from each chamber to each wind trunk, and means for automatically closing one valve when another valve to the same wind trunk is opened.

17. In a musical instrument, suitable power pneumatics, two wind trunks for supplying said pneumatics, three wind chambers for supplying said wind trunks whereby each trunk may be supplied with a plurality of different pressures or exhausts, a valve for closing the connection from each chamber to each wind trunk, a pneumatic for operating each valve, and means for automatically closing one valve when another valve to the same wind trunk is opened.

18. In a musical instrument, suitable power pneumatics, two wind trunks for supplying said pneumatics, three wind chambers for supplying said wind trunks whereby each trunk may be supplied with three different pressures or exhausts, a valve for closing the connection from each chamber to each wind trunk, a pneumatic for operating each valve, and means for automatically closing one valve when another valve to the same wind trunk is opened, and means for manually controlling the operation of each operating pneumatic.

19. In a musical instrument, suitable power pneumatics, a wind trunk supplying said pneumatics, a plurality of wind chambers for supplying said trunk with different degrees of pressure or exhaust, a valve for opening and closing the trunk to each chamber, and means for automatically closing one valve when another valve is opened, said means embracing a hand operated movable member for opening each valve, means for locking each member in its moved position, and means for unlocking each member when another member is moved to open its valve.

20. In a musical instrument, suitable power pneumatics, a wind trunk supplying said pneumatics, three wind chambers for supplying said trunk with different degrees of pressure or exhaust, a valve for opening and closing the trunk to each chamber, and means for automatically closing one valve when any other valve is opened.

21. In a musical instrument, suitable power pneumatics, a wind trunk supplying said pneumatics, three wind chambers for supplying said trunk with different degrees of pressure or exhaust, a valve for opening and closing the trunk to each chamber, and means for automatically closing one valve when any other valve is opened, said means embracing a hand operated movable member for opening each valve, means for locking each member in its moved position, and means for unlocking each member when another member is moved to open its valve.

22. In a musical instrument, suitable power pneumatics, two wind trunks for supplying said pneumatics, a plurality of wind chambers for supplying said wind trunks whereby each trunk may be supplied with a plurality of different pressures or exhausts, a valve for closing the connection from each chamber to each wind trunk, and means for automatically closing one valve when another valve to the same wind trunk is opened, said means embracing a hand operated movable member for opening each valve, means for locking each member in its moved position, and means for unlocking each member when another member is moved to open its valve.

23. In a musical instrument, suitable power pneumatics, two wind trunks for supplying said pneumatics, three wind chambers for supplying said wind trunks whereby each trunk may be supplied with three different pressures or exhausts, a valve for closing the connection from each chamber to each wind trunk, a pneumatic for operating each valve, and means for automatically closing one valve when another valve to the same wind trunk is opened, and means for manually controlling the operation of each operating pneumatic, said means embracing a hand operated movable member for opening each valve, means for locking each member in its moved position, and means for unlocking each member when another member is moved to open its valve.

24. In a musical instrument suitable power pneumatics, a wind chest supplying said pneumatics, a plurality of wind chambers for supplying said chest with different degrees of pressure or exhaust, a valve for opening and closing the chest to each chamber, a pneumatic for operating each valve, and means for automatically closing one valve when another valve is opened.

25. In a musical instrument, suitable power pneumatics, a wind chest supplying said pneumatics, a plurality of wind chambers for supplying said chest with different degrees of pressure or exhaust, a valve for opening and closing the chest to each chamber, a pneumatic for operating each valve, a duct leading to each operating pneumatic, a movable member for each duct for opening and closing the same, means for locking each member in its moved position, and means for unlocking each member when another member is moved to open its valve so as to automatically close one valve when another valve is opened.

26. In a musical instrument, suitable power pneumatics, a wind trunk supplying said pneumatics, three wind chambers for supplying said trunk with different degrees of pressure or exhaust, a valve for opening and closing the trunk to each chamber, a pneumatic for operating each valve, and means for automatically closing one valve when any other valve is opened.

27. In a musical instrument, suitable power pneumatics, two wind trunks for supplying said pneumatics, a plurality of wind chambers for supplying said wind trunks whereby each trunk may be supplied with a plurality of different pressures or exhausts, a valve for closing the connection from each chamber to each wind trunk, a pneumatic for operating each valve, a duct leading to each operating pneumatic, a movable member for each duct for opening and closing the same, means for locking each member in its moved position, and means for unlocking each member when another member is moved to open its valve to automatically close one valve when another valve to the same wind trunk is opened.

28. In a device of the class described, a plurality of power pneumatics, two wind trunks for feeding said pneumatics, a plurality of wind chambers, means for producing three different degrees of pressure or exhaust in said chambers, means for connecting one wind trunk with either one of two of said pressures or exhausts, and means for connecting the other wind trunk with either one of two of said pressures or exhausts, whereby the power pneumatics may be operated with three different degrees of pressure or exhaust.

29. In a device of the class described, a plurality of power pneumatics, two wind trunks for feeding said pneumatics, a plurality of wind chambers, means for producing three different degrees of pressure or exhaust in said chambers, means for connecting one wind trunk with either one of two of said pressures or exhausts, and means for connecting the other wind trunk with either one of two of said pressures or exhausts, whereby the power pneumatics may be operated with three different de-

grees of pressure or exhaust, both of said connecting means embracing valves and pneumatics for operating said valves.

30. An apparatus of the class described provided with a plurality of different pressure supply bellows 43, 44, 45, separate wind chambers 36, 37, 38, one for each bellows and connected therewith, two wind trunks, 20, 21, a port from each chamber to each wind trunk, an independently operated valve for each port, power pneumatics, 19, a wind chest 16, passages 14, from the wind chest to the power pneumatics, a port from each wind trunk to the wind chest, and means for opening and closing said last mentioned ports.

31. An apparatus of the class described provided with a plurality of different pressure supply chambers, two wind trunks, a port from each chamber to each wind trunk, independently operated valves, one for opening and closing each port, power pneumatics, a wind chest, passages from the wind chest to the power pneumatics, valves for opening and closing said passages, a port from each wind trunk to the wind chest and means for opening and closing said last mentioned ports.

32. An apparatus of the class described provided with a plurality of different pressure supply chambers, two wind trunks, a port from each chamber to each wind trunk, valves for opening and closing said ports, power pneumatics, a wind chest, passages from the wind chest to the power pneumatics, a port from each wind trunk to the wind chest and means for opening and closing said last mentioned ports.

33. An apparatus of the class described provided with a plurality of different pressure supply chambers, two wind trunks, a port from each chamber to each wind trunk, valves for opening and closing said ports, a wind chest, a port from each wind trunk to the wind chest and means for opening and closing said last mentioned ports.

34. An apparatus of the class described provided with power pneumatics, a plurality of different pressure supply chambers, two wind trunks, a port from each chamber to each wind trunk, valves for opening and closing said ports, a wind chest, divided into a plurality of compartments, a port from each wind trunk to each compartment, means for opening and closing said last mentioned ports and valved ports leading from the compartments to the power pneumatic.

35. An apparatus of the class described provided with three different pressure supply chambers, two wind trunks, a port from each chamber to each wind trunk, valves for opening and closing said ports, a wind chest divided into a plurality of compartments, a port from each wind trunk to each compartment, means for opening and closing said last mentioned ports, power pneumatics, passages from the compartments to the power pneumatics, and means for opening and closing said passages.

36. An apparatus of the class described provided with three different pressure supply chambers, two wind trunks, a port from each chamber to each wind trunk, independently operated valves for opening and closing said ports, a wind chest, a port from each wind trunk to the wind chest and means for opening and closing said last mentioned ports.

37. An apparatus of the class described provided with a plurality of different pressure supply chambers, two wind trunks, a port from each chamber to each wind trunk, independently operated valves, one for opening and closing each port, power pneumatics, a wind chest divided into a plurality of compartments, passages from the power pneumatics to the compartments, valves for opening and closing said passages, a port from each wind trunk to each compartment, and means for opening and closing said last mentioned ports.

38. An apparatus of the class described provided with three different pressure supply chambers, two wind trunks, a port from each chamber to each wind trunk, independently operated valves, one for opening and closing each port, power pneumatics, a wind chest divided into a plurality of compartments, passages from the power pneumatics to the compartments, valves for opening and closing said passages, a port from each wind trunk to each compartment, and means for opening and closing said last mentioned ports.

39. An apparatus of the class described provided with a plurality of different pressure supply chambers, two wind trunks, a port from each chamber to each wind trunk, independently operated valves, one for opening and closing each port, power pneumatics, a wind chest divided into a plurality of compartments, one compartment for each two power pneumatics, passages from the power pneumatics to the compartments, valves for opening and closing said passages, a port from each wind trunk to each compartment, and means for opening and closing said last mentioned ports.

40. An apparatus of the class described provided with three different pressure supply chambers, two wind trunks, a port from each chamber to each wind trunk, independently operated valves, one for opening and closing each port, power pneumatics, a wind chest divided into a plurality of compartments, one compartment for each two power pneumatics, passages from the power pneumatics to the compartments, valves for opening and closing said passages, a port from

each wind trunk to each compartment, and means for opening and closing said last mentioned ports, said means embracing a plurality of valves, the valves for each compartment being operated independently of one another.

In testimony whereof, I have signed my name to this specification, in the presence of two subscribing witnesses.

JOSEPH SCHWERTNER.

Witnesses:
GORHAM CROSLY,
EDWIN SEGER.

Copies of this patent may be obtained for five cents each, by addressing the "Commissioner of Patents, Washington, D. C."