US 20110030511A1

(19) United States

(12) Patent Application Publication

Schmidt

(10) Pub. No.: US 2011/0030511 A1

(43) Pub. Date: Feb. 10, 2011

(54) ROOFING MATERIAL REMOVING APPARATUS

(76) Inventor: **Keith Schmidt**, Cedar Falls, IA (US)

Correspondence Address:
Keith Schmidt
4205 Maryhill Drive
Cedar Falls, IA 50613 (US)

(21) Appl. No.: **12/537,538**

(22) Filed: **Aug. 7, 2009**

Publication Classification

(51) **Int. Cl.**
E04D 15/00 (2006.01)

(52) **U.S. Cl.** **81/45**; 30/170

(57) **ABSTRACT**

Roofing material removing apparatus are provided. More particularly, roofing material removing apparatuses with an adjustable guide assembly wherein the adjustable guide assembly provides for continual forward motion and continuous control of the flow of roofing material are presented. The adjustable guide assembly is adaptable to various tool assemblies and applications.

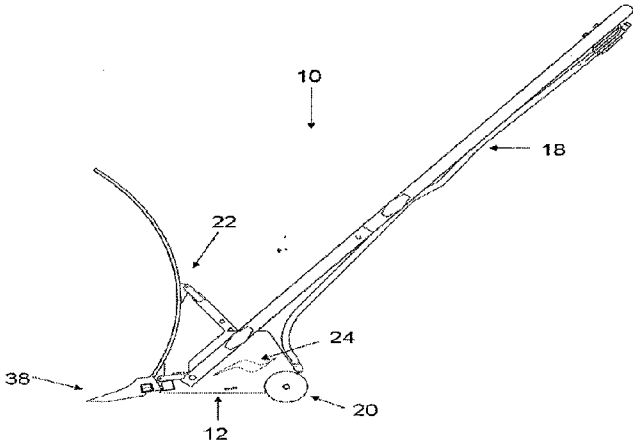

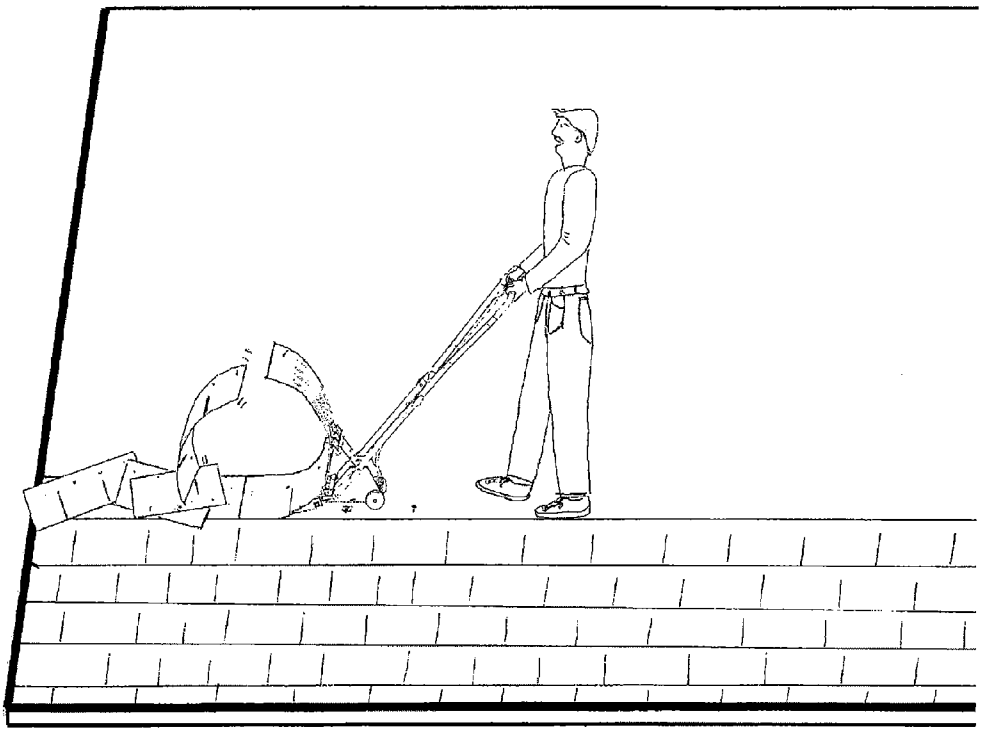

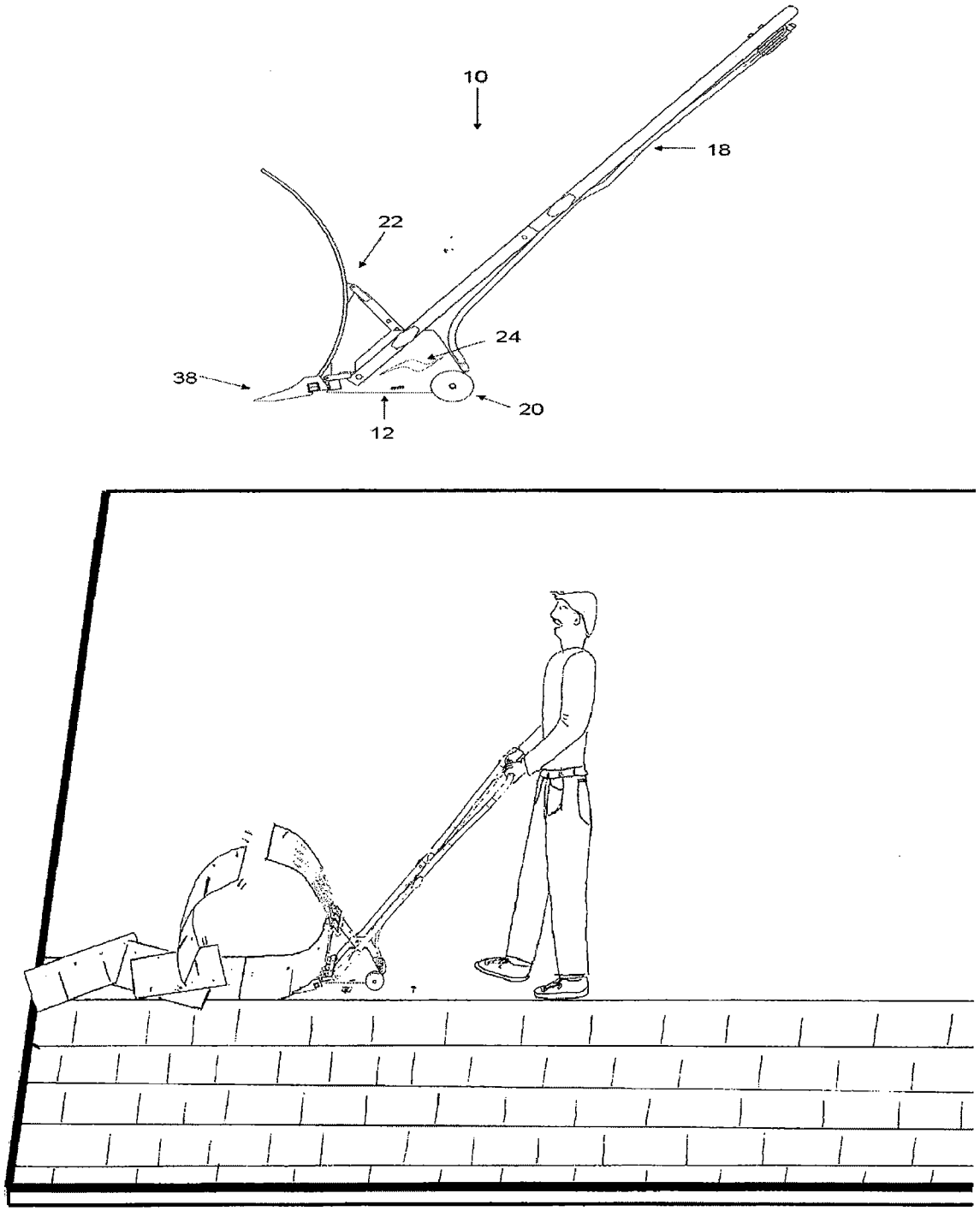

FIG. 1

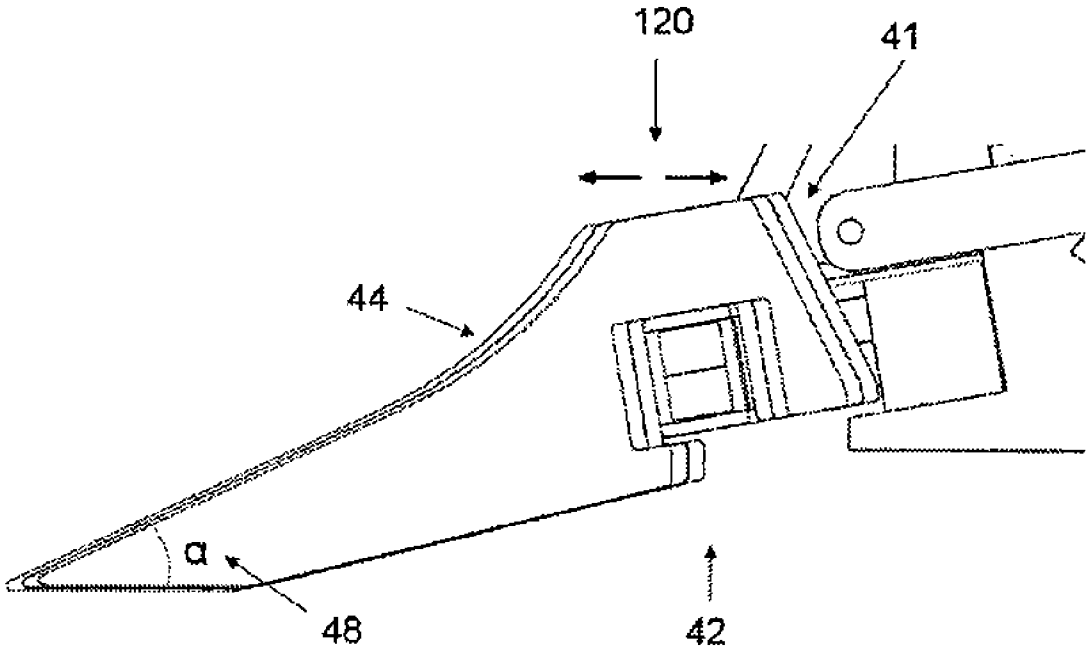

FIG. 2

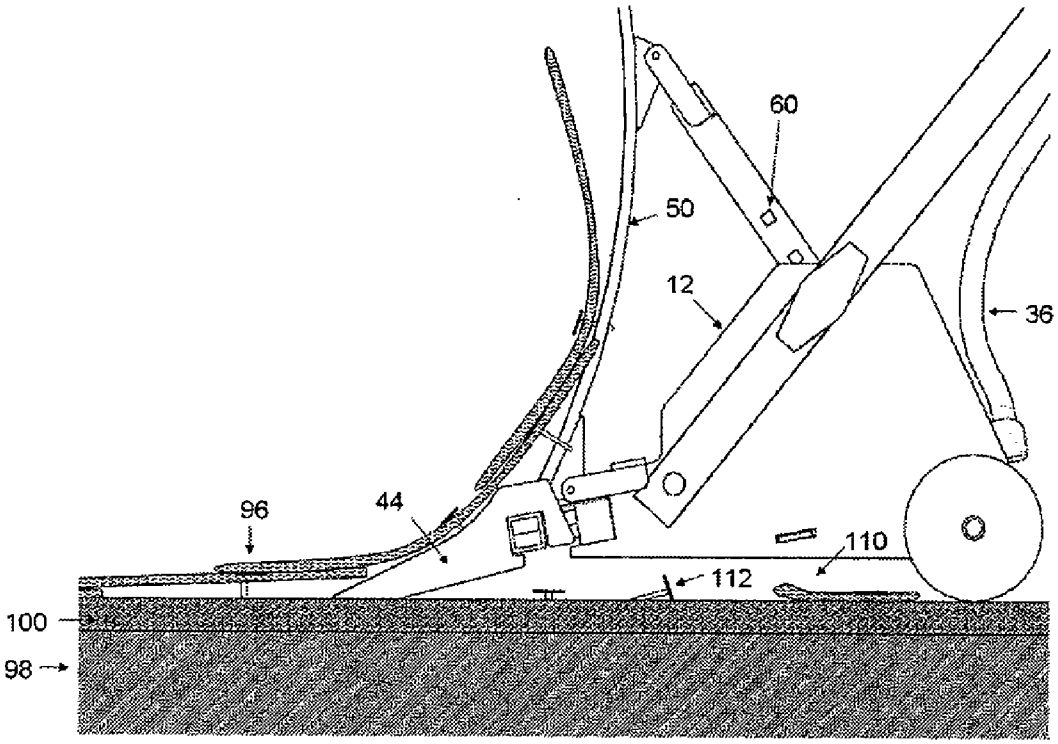

FIG. 3

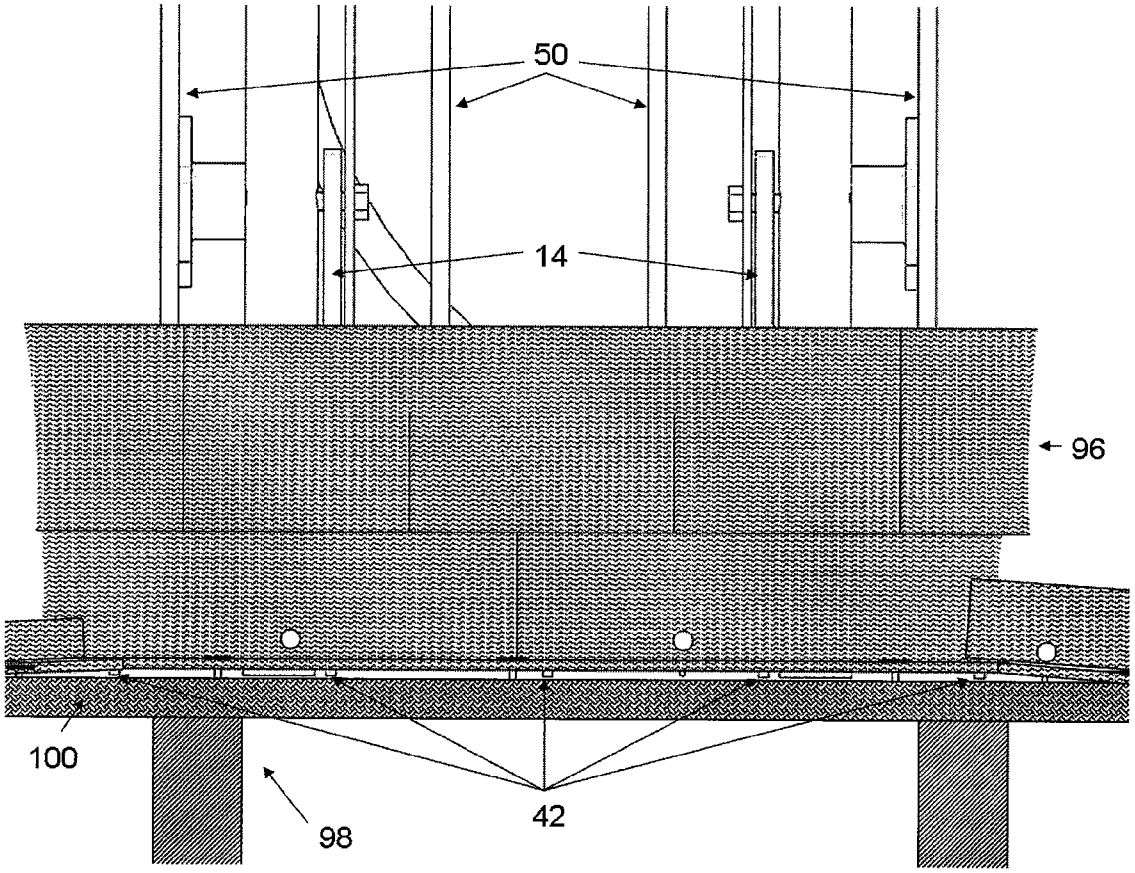

FIG. 4

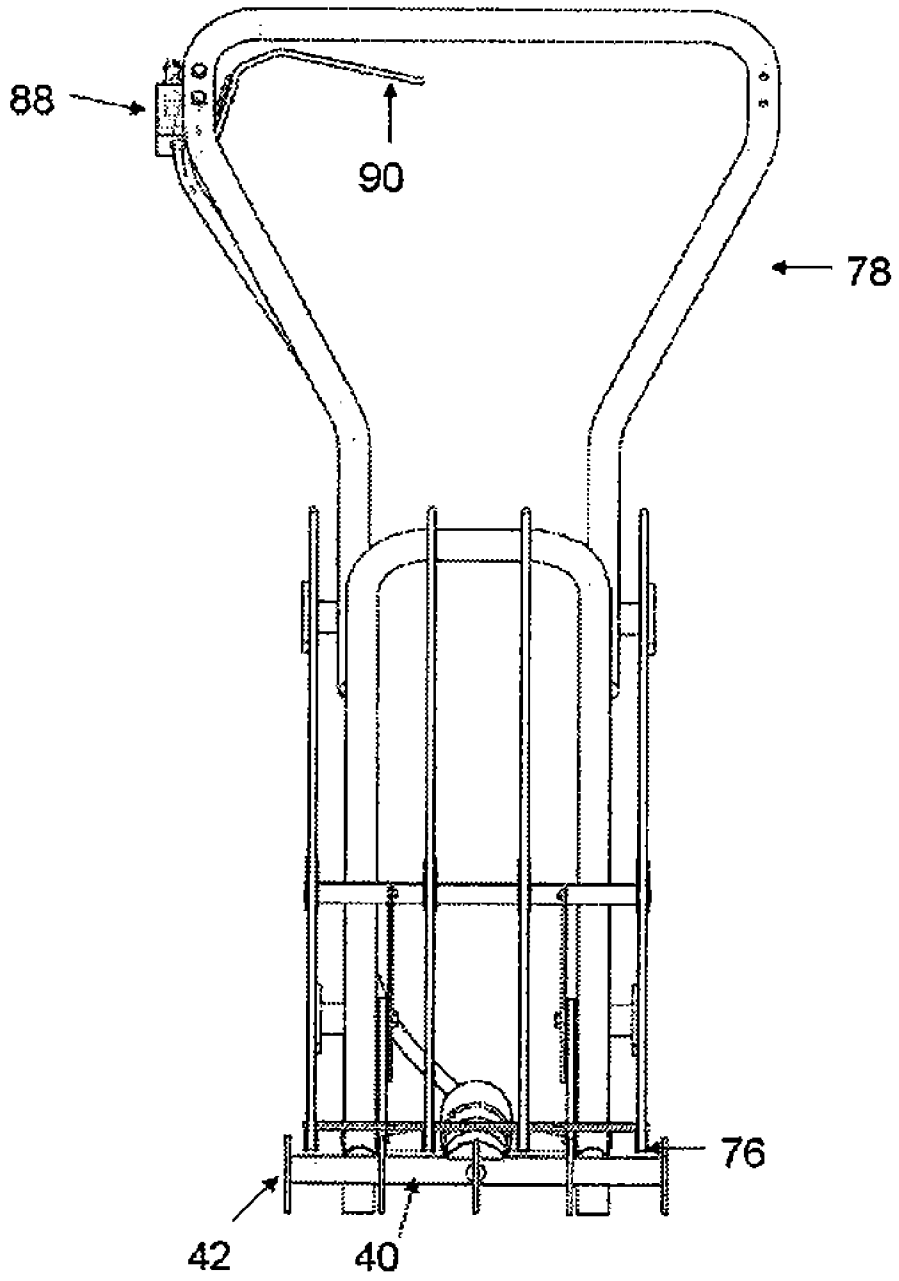

FIG. 5

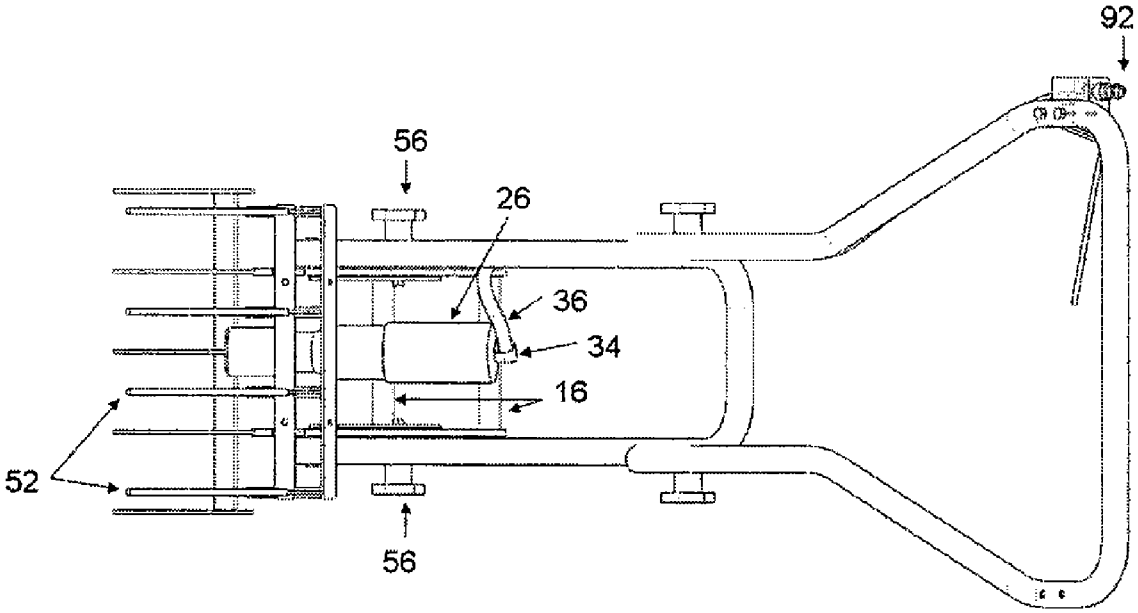

FIG. 6

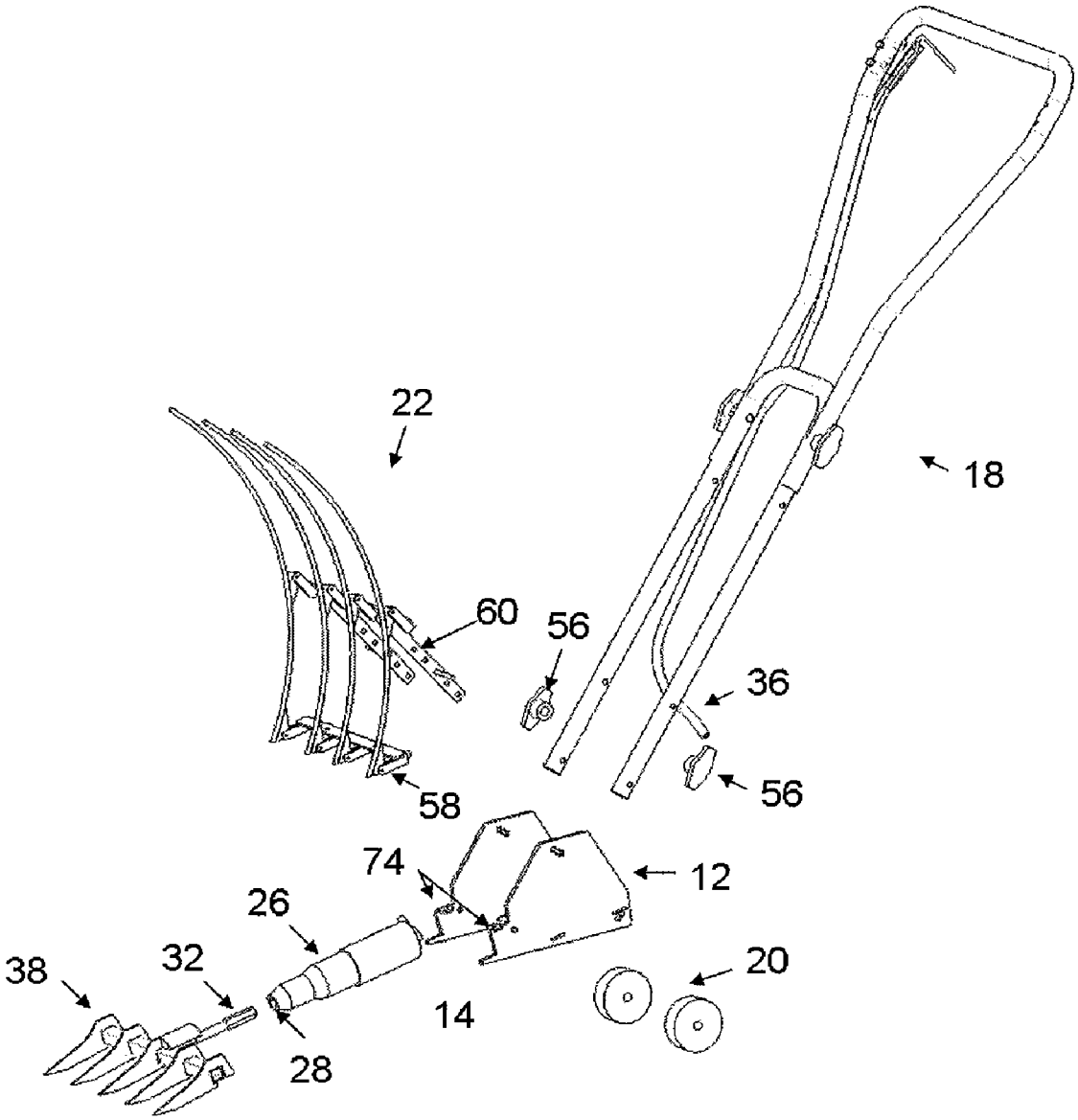

FIG. 7

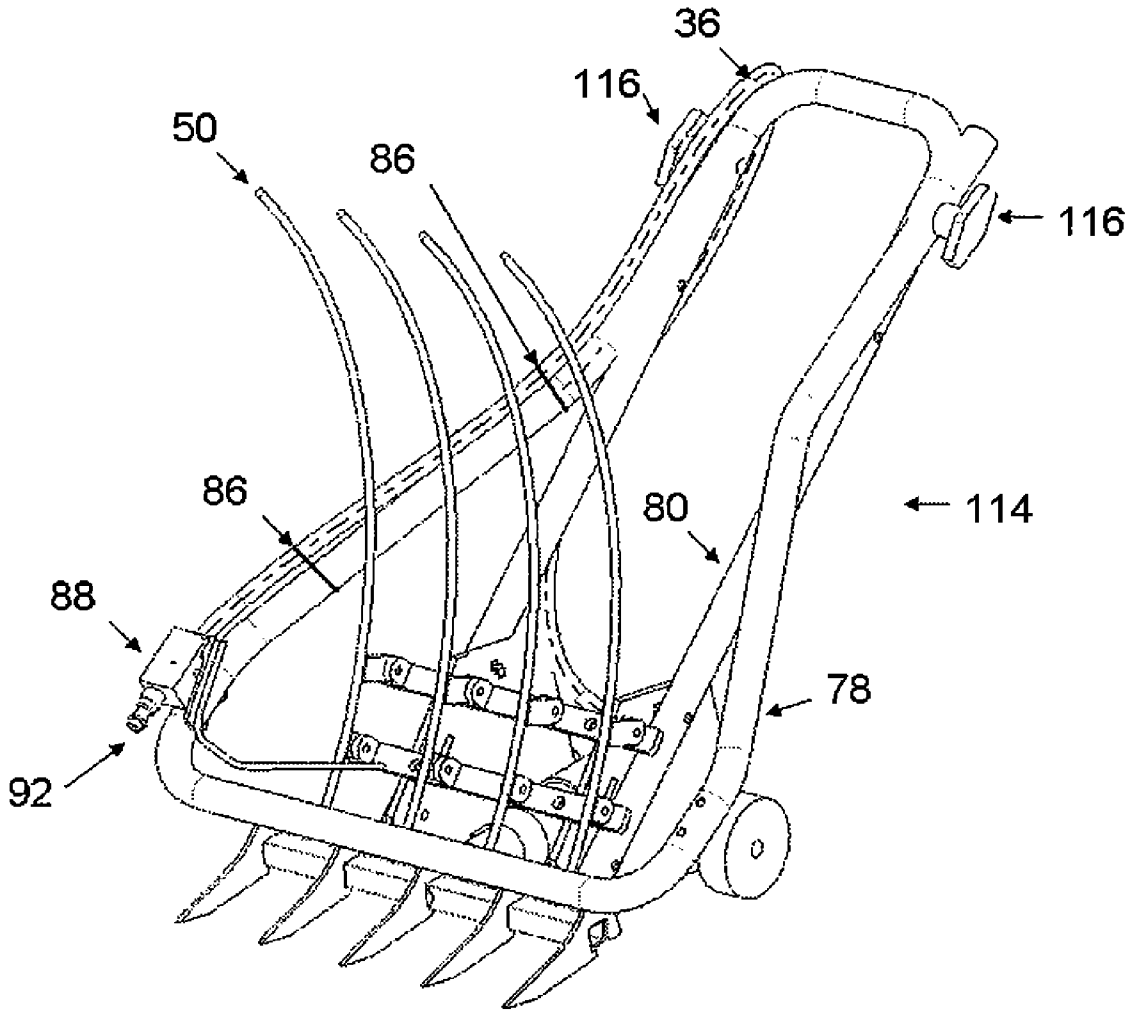

FIG. 8

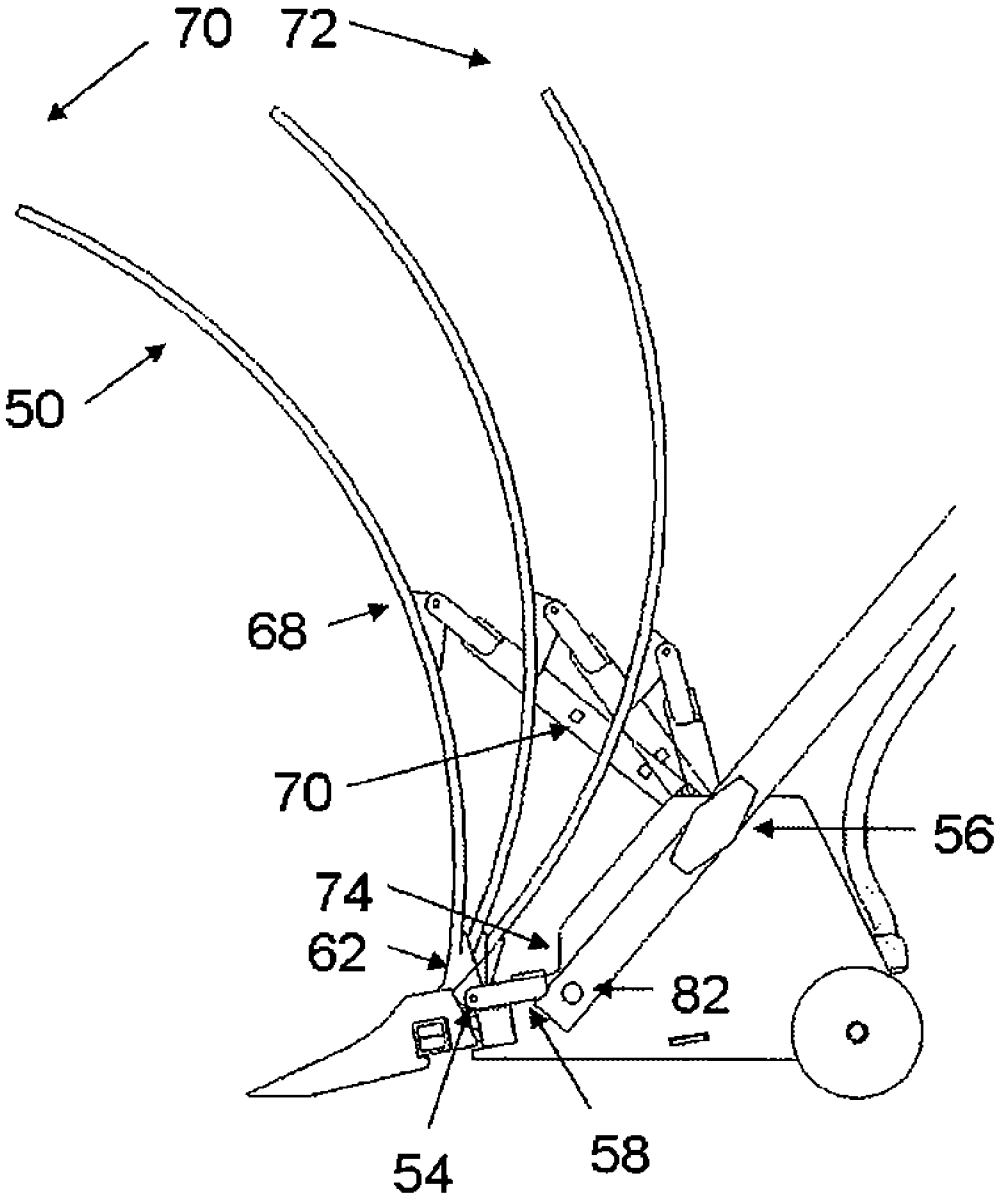

FIG. 9

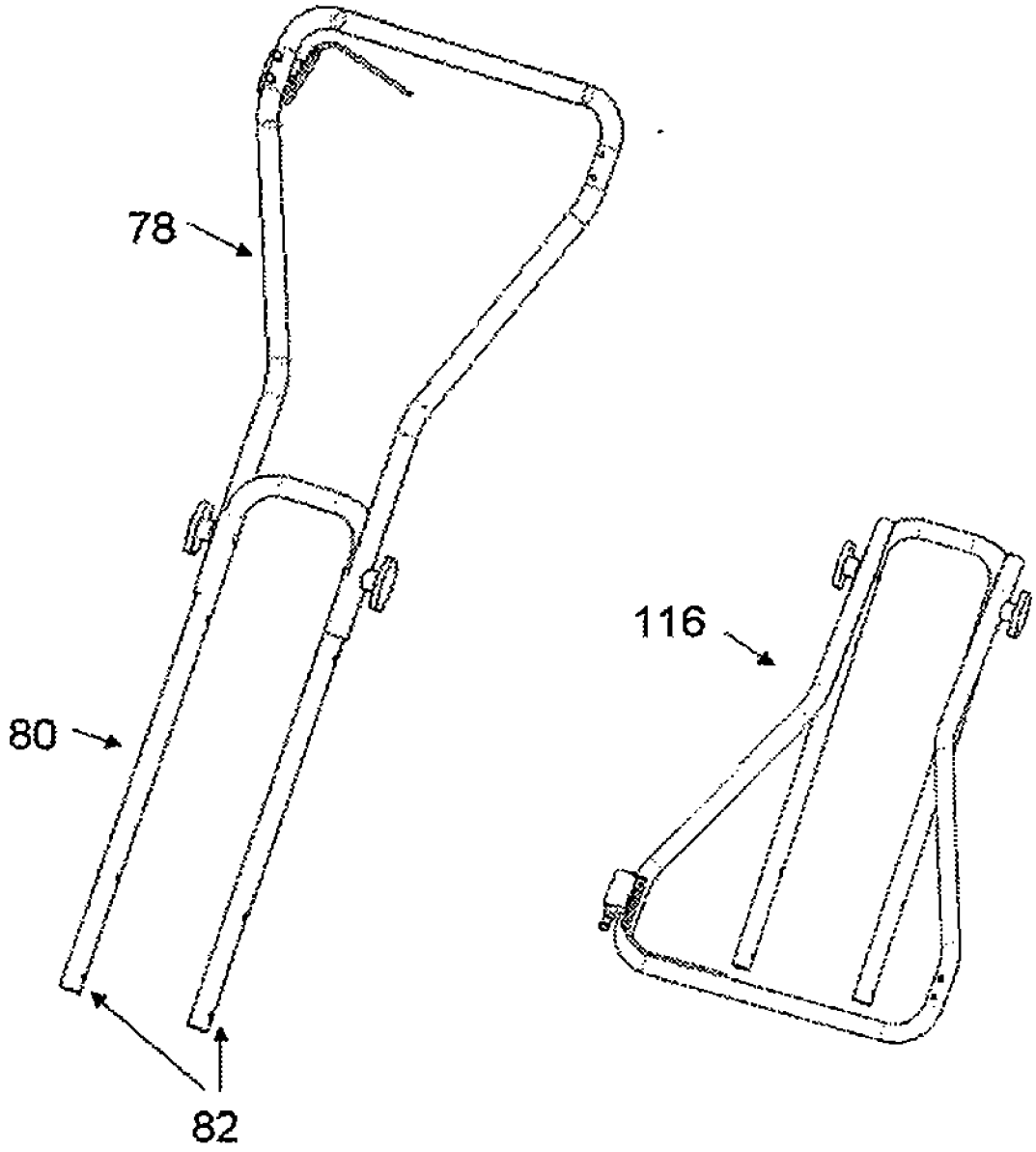

FIG. 10

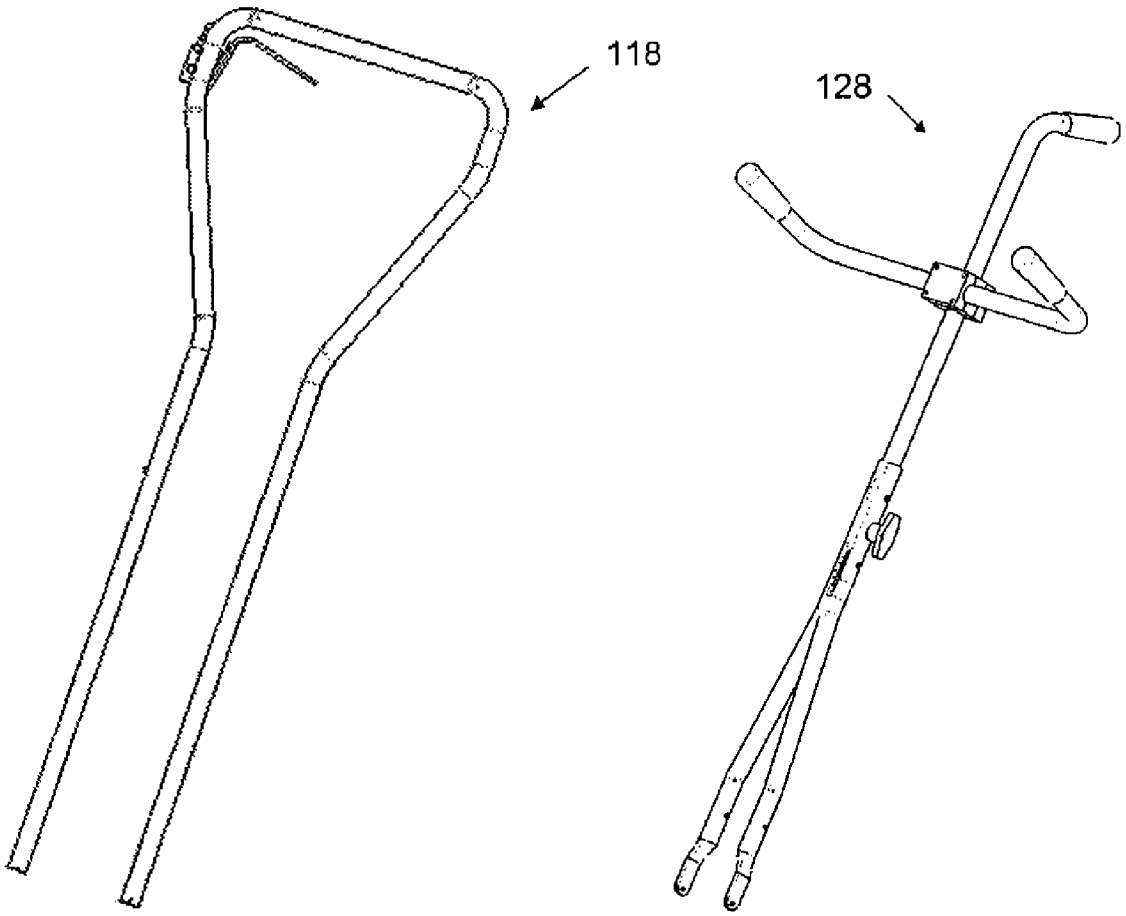

FIG. 11

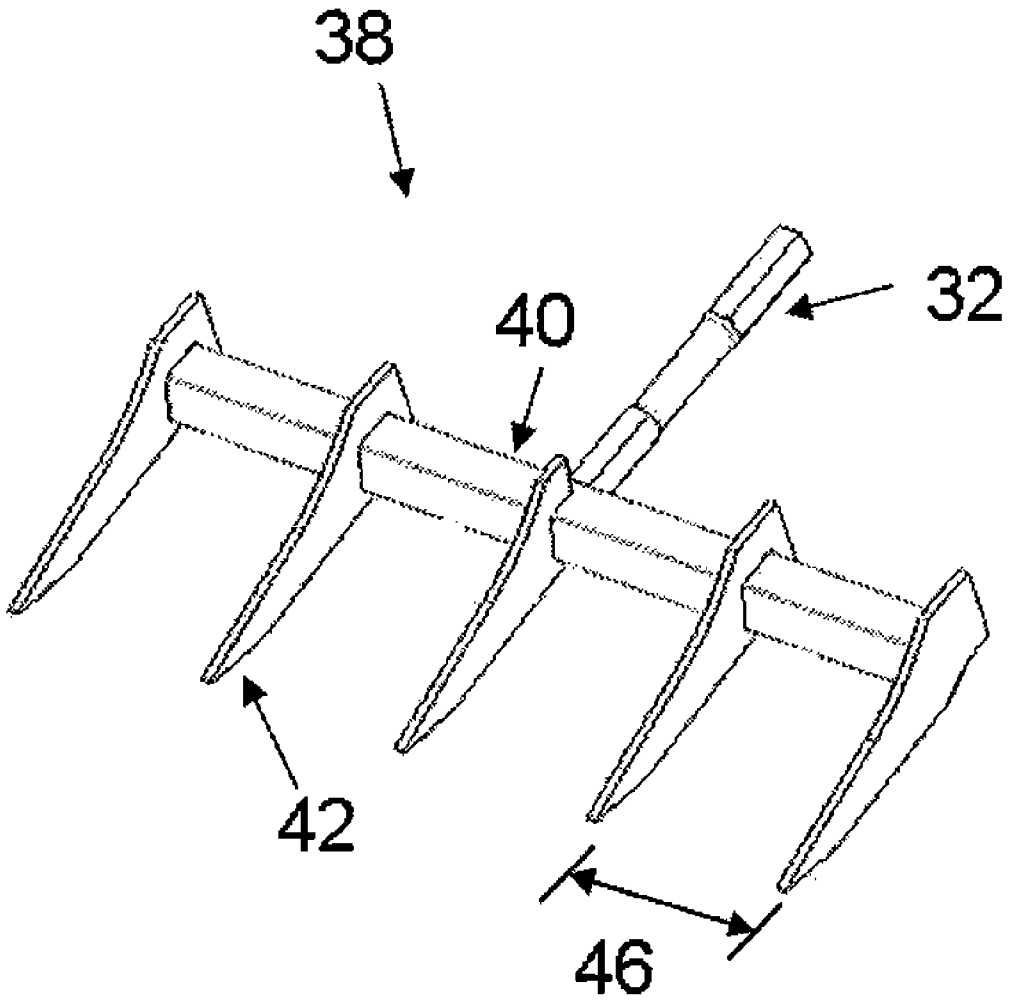

FIG. 12

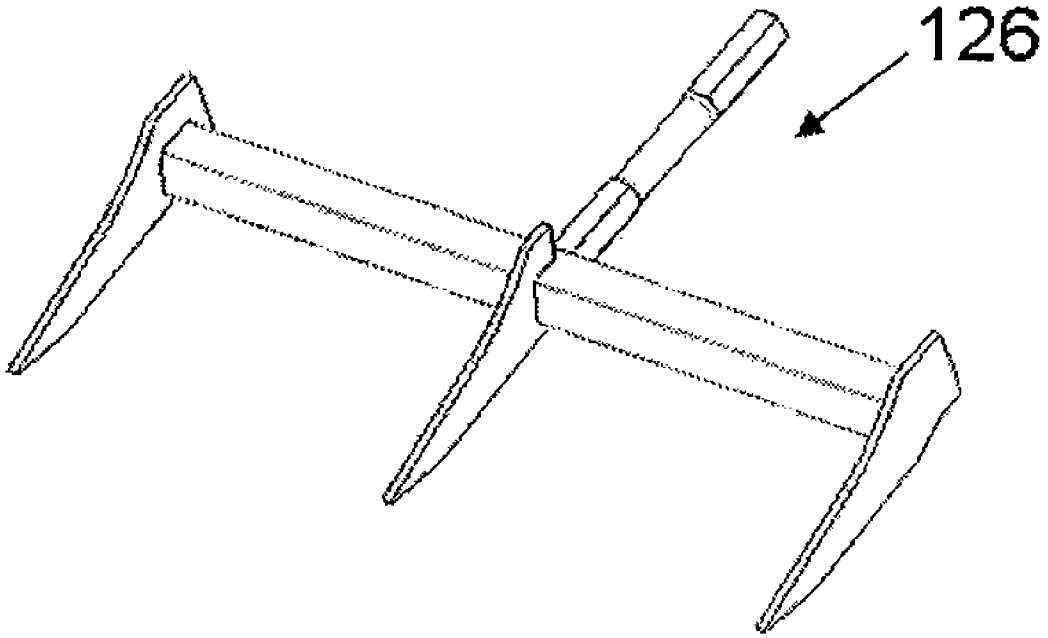

FIG. 13

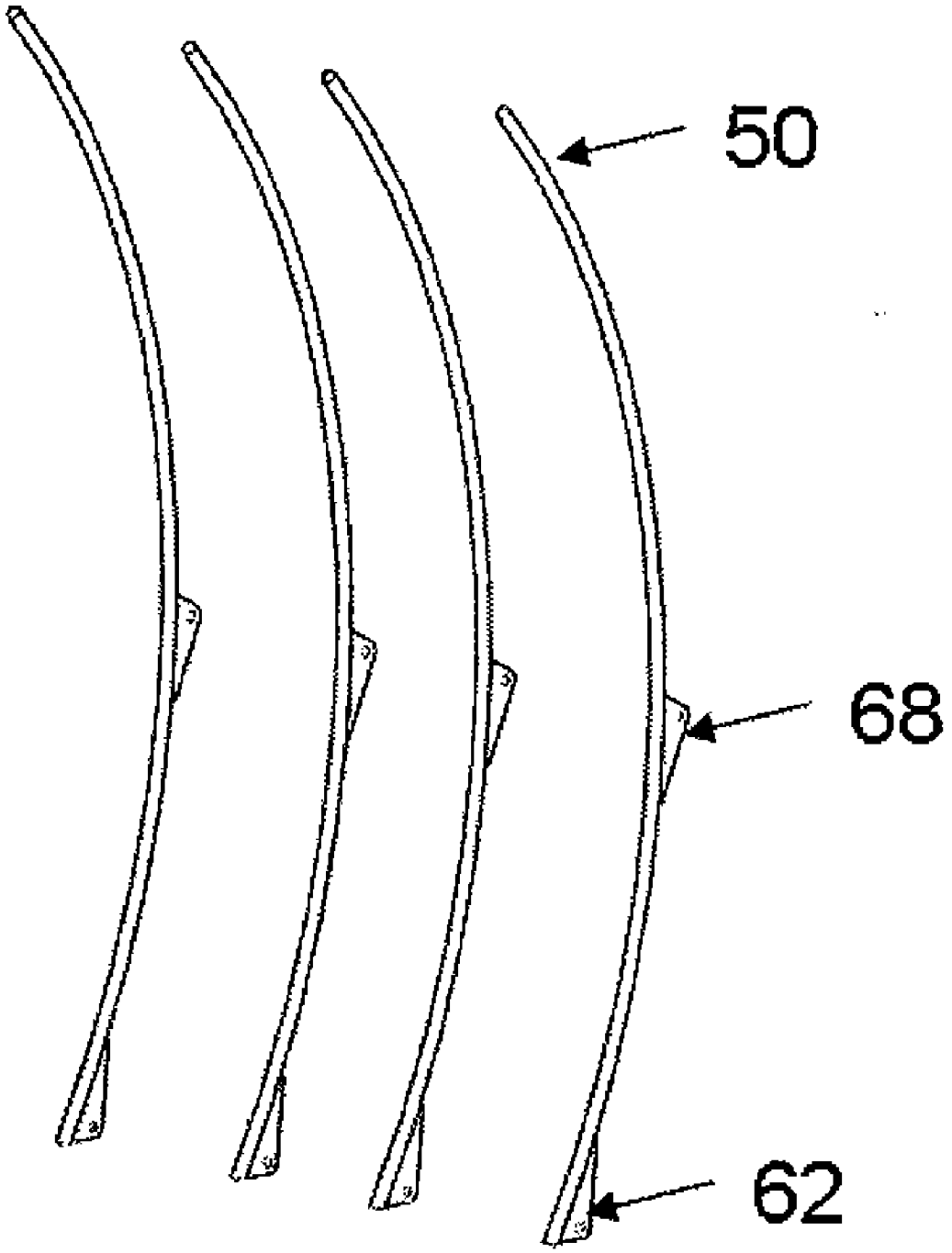

FIG. 14

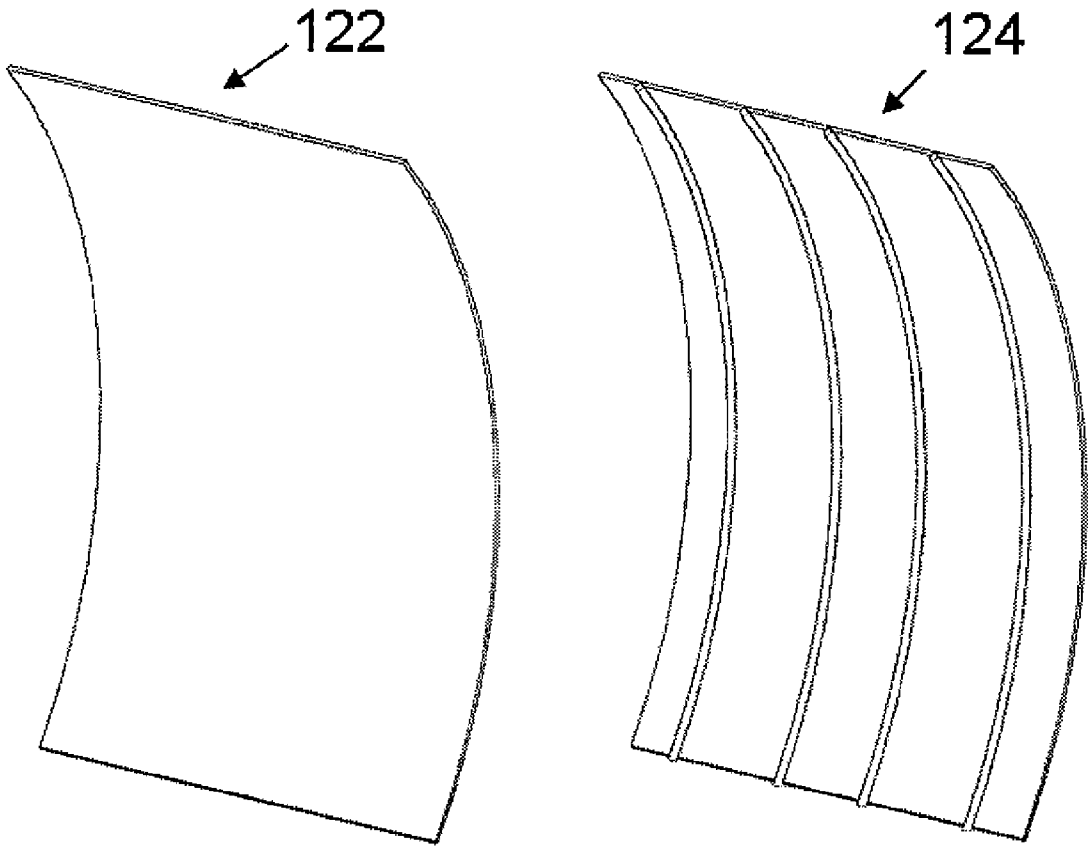

FIG. 15

ROOFING MATERIAL REMOVING APPARATUS

FIELD

[0001] The present invention relates to the field of construction equipment and more particularly to a pneumatic roofing material removing apparatus for detaching various types of shingles, roofing material, or other related material.

BACKGROUND

[0002] Several attempts have been made to automate or assist in the job of removing roofing material. In general apparatus are known to consist of familiar and generally similar configurations, notwithstanding the myriad of designs. In many cases, known machines are impracticable due to their size, shape, and weight. Further, many known machines have many moving parts and systems that all have to work together to achieve the desired outcome. Many machines require a start/stop process and setting up and using these machine is often time consuming. Prior art machines have inherent control challenges with cables, cutting ends and other moving parts. In some instances, it is difficult to control the collection of the shingles, especially in machines where the trap must be continuously emptied.

[0003] Due to the problems with the current machines, a roof material removing apparatus which allows not only for continuous motion and removal of material for maximum efficiency, but also operator comfort and ergonomics, is needed.

SUMMARY

[0004] Roofing material removing apparatus are provided. One embodiment is comprised of a chassis frame, a handle assembly coupled with the chassis frame, an actuator connected with the chassis frame, a tool assembly reversibly connected with the actuator; and an adjustable guide assembly pivotally and adjustably connected with the chassis frame. Many embodiments also include a pair of wheels connected with the chassis frame. Vertically oriented members of the chassis frame provide mounting for the handle assembly, wheels, guide assembly and shields/body panels/aesthetic pieces and decals. The actuator connects with the chassis frame and provides a power source for driving the tool assembly. In many embodiments, the actuator is a pneumatic cylinder, and has a front portion which accommodates multiple different types of tool assemblies.

[0005] In one example, the tool assembly has multiple teeth of a curved angular shape, which are substantially parallel to each other and substantially equally spaced apart on the toolbar. Generally in these embodiments, the front portion of the teeth have an acute angle.

[0006] The handle assembly commonly consists of a top and bottom section whereby the handle assembly generally extends from the chassis frame rearward at an inclining angle and can be folded for transport and storage.

[0007] In one aspect, the adjustable guide assembly is adjustably connected with the chassis frame and consists of multiple curved guide rods which are spaced apart and parallel to each other. In this embodiment, the guide rods are pivotally and adjustably coupled with a lower and an upper pivot support member. The lower pivot support member can position each guide rod relative to the tool assembly both proximately and vertically below the trailing end of the tool assembly toolbar. The lower pivot support member offers a point of rotation for the guide rods. In many configurations, the upper pivot support member positions the upper part of each guide rod. In this case, the upper pivot support member has multiple length adjustment settings, which enable the guide rods to be positioned selectively and independently fore and aft at multiple angles for desired roofing material direction and flow. The entire adjustable guide assembly is removable, allowing different guide assembly combinations such as curved rods, straight rods, solid section guide plate, rods plus solid guide plate, and the like to be installed for optimum performance based upon the environmental conditions and different materials being removed

BRIEF DESCRIPTION OF THE DRAWINGS

[0008] There are shown in the drawings certain exemplary embodiments. It should be understood that the invention is not limited in its application to the details of construction and to the arrangements of the components set forth in the following description or illustrated in the drawings. Other embodiments and variations are within the scope of the appended claims. In the drawings:

[0009] FIG. **1** is a pictorial view of an embodiment in use on a pitched roof.

[0010] FIG. **2** is a partial side view demonstrating the motion of the tool assembly.

[0011] FIG. **3** demonstrates a partial side view of an embodiment in use.

[0012] FIG. **4** is partial front view of an embodiment in use.

[0013] FIG. **5** illustrates a front view.

[0014] FIG. **6** is a top view.

[0015] FIG. **7** is an exploded view of the components of one embodiment.

[0016] FIG. **8** is an isolated view of an embodiment with the handle assembly folded.

[0017] FIG. **9** shows a partial side view of potential multiple adjustable guide assembly positions.

[0018] FIG. **10** is an isolated view of a handle assembly.

[0019] FIG. **11** is an isolated view of an alternative embodiment of the handle assembly.

[0020] FIG. **12** is an isolated view of a tool assembly.

[0021] FIG. **13** is an isolated view of an alternative embodiment of the tool assembly.

[0022] FIG. **14** is an isolated view of guide rods.

[0023] FIG. **15** is an isolated view of alternative embodiments of the adjustable guide assembly.

DETAILED DESCRIPTION

[0024] With reference now to the drawings, and in particular, to FIGS. **1** through **15** thereof, an embodiment of the roofing material removing apparatus generally designated by the reference number **10** will be described.

[0025] One embodiment is comprised of a chassis frame **12**, an actuator **26**, a handle assembly **18**, a tool assembly **38**, an adjustable guide assembly **22**, and a pair of wheels **20**. The chassis frame **12**, having two structural, vertically orientated members **14** which are connected to each other by a cross-beam support **16**. The vertical members **14** of the chassis frame **12** also provide mounting for the handle assembly **18**, wheels **20**, adjustable guide assembly **22** and any shields/body panels/aesthetic pieces/decals **24**. The wheels **20** attach to the lower rear, outboard portion of the chassis frame vertical members **14**. Alternatively, skid plates or other means of

enabling motion across a roof could be used in place of the wheels **20** shown in the embodiment demonstrated by FIG. **7**.

[0026] The actuator **26** provides a power source for the tool assembly **38**, and could be in the form of an electric motor, small engine, manual mechanism or pneumatic cylinder. Another alternate power source could be powered wheels **20** to drive and engage the tool assembly **38**. The actuator **26**, shown as a pneumatic cylinder, mounts to the chassis frame cross-beam support **16**, which connect the vertical members **14**. When the actuator **26** is a pneumatic cylinder, the pneumatic cylinder **26** has a front portion **28** which accommodates multiple tool assemblies. The pneumatic cylinder **26** has a rear portion **34** and has an air supply hose **36** extending outward therefrom.

[0027] The tool assembly **38** has a shaft **32** at the rear end which inserts and is captured by the front portion **28** of the pneumatic cylinder **26**. The front end of the shaft **32**, connects and attaches to a toolbar **40** which positions and secures tool assembly engaging teeth **42**. In one embodiment, the tool assembly engaging teeth **42**, are a curved angular shape **44**, are parallel to each other, and are equally spaced apart **46** (approximately 3" apart) on the toolbar, with the front portion of the tool assembly engaging teeth **42** having an acute angle **48**. Depending on environmental conditions and material, the spacing of the teeth could be reduced, i.e. more teeth per inch, or increased, i.e. less teeth per inch to optimize performance. The shape of the teeth could also vary. Optimal performance teeth shape and pattern examples may include, but are not limited to, a "V" shaped teeth pattern, longer teeth, i.e. teeth with a smaller angle, shorter teeth, i.e. teeth with a steeper angle, and the like. The skilled artisan will be able to choose the appropriate spacing and shape of the teeth without undue experimentation.

[0028] The adjustable guide assembly **22** connects to the chassis frame **12** and is comprised of guide rods **50** which are spaced apart **52** and parallel to each other. In many embodiments, the guide rods **50** are pivotally **54** and adjustably **56** coupled to a lower **58** and upper **60** pivot support members. The lower pivot support member **58** positions a lower portion **62** of the guide rod **50** relative to the tool assembly **38** proximately and vertically below a trailing end **41** of the tool assembly and offers the point of rotation **54** for the guide rods **50**. The upper pivot support member **60** positions the upper end **68** of the guide rods and has multiple length adjustment settings **70** enabling the guide rods to be positioned selectively and independently fore **70** and aft **72** at multiple angles for the desired material direction and flow. The lower pivot support member **58** couples to the lower, front portion **74** of the chassis frame **12** vertical members **14**. The upper pivot support member **60** adjustably **56** couples to the chassis frame **12** vertical members **14**. The lower portion **62** of the guide rod **50** are positioned vertically just above the toolbar **46**, laterally in-between the teeth **76** and within the fore/aft side profile of the tool assembly engaging teeth **42** and toolbar motion **120** so material doesn't get caught on them and stop movement. The entire adjustable guide assembly **22** is removable, allowing different guide assembly combinations to be installed depending upon environmental conditions and different materials being removed. Optimal performing guide assembly combination examples may include curved rods, straight rods, solid section guide plate, rods plus solid guide plate, and the like.

[0029] The handle assembly **18** is comprised of a top section **78** and a bottom section **80**, which extends from the chassis frame **12** rearward at an inclining angle. The bottom section of the handle assembly **80** is pivotally **82** and adjustably **56** coupled to the chassis frame **12** vertical members **14**. The top section of the handle assembly **78** is pivotally coupled **82** to the bottom section handle assembly **80**. The handle assembly **18** provides mounting and positive routing points **86** for the air supply hose **36** which connects to the rear portion **34** of the pneumatic cylinder **26**, mounting points for an operation control valve assembly **88** at the upper end of the top section of the handle assembly **78**, and an ergonomic height and shape to reduce fatigue on an operator. The operation control valve assembly **88** offers a lever **90** extending inwardly from the operation control valve assembly **88**, parallel to lateral top section of the handle assembly **78**, such lever **90**, which can be depressed by the operator's hand to activate and enable air to flow to the pneumatic cylinder **26**, making it operational. The operation control valve assembly **88** offers a connection point for the air supply **92** at the rear portion of the valve. In many embodiments, the air supply **92** is an air compressor.

[0030] The operation of the roofing material removing apparatus begins first with an operator grabbing the top handle section **78** and engaging the control valve assembly lever **90** which opens the valve and sends compressed air to the pneumatic cylinder **26**. Said compressed air causes a piston with within the pneumatic cylinder **26** to rapidly move back and forth **120**, engaging the shaft **32** of the tool assembly **38**. The tool assembly **38** as a result extends and retracts back and forth **120**. The apparatus **10** is maneuvered and positioned as desired to engage the tool assembly teeth **42** underneath the shingles or desired material **98** for removal. The roofing material removing apparatus can operate in any direction to remove material (vertically, horizontally, diagonally or other path), but in many embodiments a vertical motion starting at the roof peak and working down the roof is most advantageous.

[0031] Once the roofing material removing apparatus is in a desired operating position, the leading teeth **42** of the tool assembly **38** engage and come in contact with shingles and roofing material **96**. The teeth's inclined, acute curved shape **44** and penetrating toolbar motion **120** thrust between the shingles/roofing material **96** and parent material **98** (typically plywood **100**), causing shingles, nails, and roofing material to be lifted up, separating from the parent material **98**. As the apparatus continues across the roof, the shingles **96** and nails progress up the teeth **42**, disengaging fully from the parent material **98**, allowing the teeth to continue their motion and contact the guide assembly rods **50** which direct the material upward and forward in the desired path, eventually turning over in front of the roofing material removing apparatus (shingles upside down with nails facing up), finding their way to the edge of the roof or where directed. The position of the adjustable guide assembly **22** can be adjusted fore **70** and aft **72** to get the most desired positioning to remove material. A steeper angle, as illustrated with the guide rods **50** in the forward position **70**, may be more desired for material like wood shingles, which turn over easily. Shingles with nails facing up slide easier down the roof, as the nails are less likely to catch, aiding the removal of material and overall performance.

[0032] Additionally, the chassis frame **12** and pneumatic cylinder **26** are disposed relative above the tool assembly engaging teeth **42** to give height and clearance **110** for nails still fixed to the parent material **98**, or shingles **96** still fixed to

the parent material **98**, or loosen nails **112** or the like; to freely pass underneath the chassis without disrupting the performance of the tool assembly **38** and overall performance of the apparatus **10**. Furthermore, the roofing material removing apparatus can be pivoted about the wheels **20** to lift shingles **96** or other material over desired roof edges or bumps or buildups, giving it further versatility.

[0033] Once operation has ceased, the roofing material removing apparatus has the ability to fold **114** the top section of the handle assembly **78**. by loosening knobs **116** to maximize moving and transporting the apparatus in a compact, efficient manner. In many embodiments, the top section of the handle assembly **78** will be folded forward.

[0034] In one embodiment, the roofing material removing apparatus provides continual forward motion and flow of roofing material, thereby controlling the roofing material and keeping it in front of the apparatus. In many embodiments, the roofing material removing apparatus is comprised of a minimum number of moving parts and highly engineered for (a) maximum performance, (b) ease of construction/assembly, (c) ergonomics, (d) durability, and (e) ease of service.

[0035] In certain embodiments, the roofing material removing apparatus is made light in weight, easy to control, and easy to maneuver. In these embodiments, the roofing material removing apparatus is often commonly portable, adjustable, and easy to transport.

[0036] In exemplary embodiments, the tool assembly is optimized to engage for maximum effectiveness and shingle removal speed. Use of tool assemblies which differ from those shown in the embodiments in the figures are contemplated.

[0037] An alternative embodiment of the handle assembly is a fixed handle **118** as shown in FIG. **11**. Yet another alternative embodiment of the handle assembly is a "T" handle **128** as shown in FIG. **11**. Additionally, another alternative of the handle assembly is to integrate the handle with the chassis frame and combinations thereof.

[0038] An alternative embodiment of the tool assembly as shown in FIG. **13** is a tool assembly **126** comprised of three teeth and equally spaced for optimized performance based on material removing and conditions. In other embodiments, the teeth of the tool assembly **126** will not be equally spaced. Further alternative embodiments of the tool assembly are increases or decreasing the number teeth, thus decreasing or increasing the space between each tooth. Other alternative embodiments include the tool assembly in the shape of the toolbar with teeth (v-shaped fore/aft, v-shaped vertically, curved, and the like). Yet another alternative embodiment of the tool assembly is a one piece, instead of a multiple piece assembly. Additionally, a further alternative embodiment is the shape of the shaft thereof (round, triangle, square, and so forth). Further alternative embodiments of the tool assembly include varying materials manufacturing and heat treating processes to achieve desired performance.

[0039] An alternative embodiment of the guide rods is a solid guide plate **122** or combination rod and plate **124** as shown in FIG. **15**. Other alternative embodiments of the guide rods include alternative shapes such as straight, oval, elliptical, and so forth. Additionally, in another alternative embodiment, the guide rods comprise guide bars instead of rods. Furthermore, the guide rods can be configured to have adjustable widths and be individually replaceable for service.

[0040] An alternative embodiment of the guide assembly is a rigid, non-adjustable guide assembly. Additionally, another alternative embodiment is to integrate the guide assembly with the chassis frame and combinations thereof.

[0041] Alternative embodiments of the wheels incorporate suspended wheels, which offer a range of motion. Additionally, another alternative embodiment of the wheels comprises powered wheels which turn and assist in moving the apparatus in desired motion.

[0042] An alternative embodiment of the actuator is to integrate it into the chassis frame (one-piece assembly) and combinations thereof.

What is claimed is:

1. A roofing material removing apparatus for detaching and removing various types of roofing material comprising:
- a chassis frame;
- a handle assembly coupled with the chassis frame;
- an actuator connected with the chassis frame;
- a tool assembly reversibly connected with the actuator; and
- an adjustable guide assembly pivotally and adjustably connected with the chassis frame.

2. The apparatus in claim **1** wherein the adjustable guide assembly has one or more adjustable guide rods.

3. The apparatus in claim **2** wherein the adjustable guide rods are curved in shape, substantially parallel to each other, and spaced apart from each other.

4. The apparatus in claim **2** wherein the guide rods are pivotally and adjustably coupled with at least one support member, whereby the at least one support member supports and variably positions the guide rods relative to the tool assembly.

5. The apparatus in claim **4** further comprising at least two support members, wherein the at least two support members comprise a lower pivot support member coupled with the chassis frame and an upper pivot support member adjustably coupled with the chassis frame.

6. The apparatus in claim **5** wherein the upper pivot support member comprises multiple adjustment settings, whereby the adjustment settings enable each guide rod to be positioned selectively and independently fore and aft in multiple angles.

7. The apparatus in claim **5** wherein the lower pivot support member positions a lower end of each guide rod proximately and vertically below a trailing end of the tool assembly.

8. The apparatus in claim **5** wherein the guide rods are removable.

9. The apparatus in claim **1** wherein the handle assembly is pivotally and adjustably coupled with the chassis frame.

10. The apparatus in claim **1** wherein the handle assembly comprises a bottom section and top section, and further wherein the handle assembly is foldable.

11. The apparatus in claim **1** further comprising a control valve coupled with the handle assembly.

12. The apparatus in claim **1** wherein the tool assembly comprises a toolbar coupled with a shaft that interfaces with the actuator, wherein the toolbar comprises teeth.

13. The apparatus in claim **12** wherein the teeth are a curved angular shape, substantially parallel to each other, and substantially equally spaced apart on the toolbar, further wherein a front portion of the teeth have an acute angle.

14. The apparatus in claim **1** wherein the actuator is a pneumatic cylinder.

15. The apparatus in claim **14** wherein the pneumatic cylinder is removable.

16. The apparatus in claim **1** further comprising at least one wheel is coupled with the chassis frame.

17. A roofing material removing apparatus for detaching and removing various types of roofing material comprising:

a chassis frame;

a handle assembly coupled with the chassis frame;

an actuator connected with the chassis frame;

a tool assembly reversibly connected with the actuator; and

an adjustable guide assembly pivotally and adjustably connected with the chassis frame, wherein the adjustable guide assembly has at least one adjustable guide rod.

18. The apparatus in claim **17** wherein each adjustable guide rod is adapted to be positioned selectively and independently fore and aft in multiple angles.

19. The apparatus in claim **17** wherein a lower end of each adjustable guide rod is disposed proximately and vertically below a trailing end of the tool assembly.

20. The apparatus in claim **17** wherein the adjustable guide rods are removable.

* * * * *