US 20060232111A1

(19) United States

(12) Patent Application Publication

(10) Pub. No.: US 2006/0232111 A1

(43) Pub. Date: Oct. 19, 2006

Hasegawa et al.

(54) EXTERNAL COVERING MATERIAL FOR MOTOR VEHICLE, MOTOR VEHICLE SEAT, AND APPARATUS FOR PRODUCING THE SEAT

(76) Inventors: **Kenichi Hasegawa**, Saitama (JP); **Tomohisa Chiba**, Saitama (JP); **Yoshinori Muramatsu**, Shizuoka (JP)

Correspondence Address:
SCHIFF HARDIN, LLP
PATENT DEPARTMENT
6600 SEARS TOWER
CHICAGO, IL 60606-6473 (US)

(21) Appl. No.: 10/544,600

(22) PCT Filed: Feb. 5, 2004

(86) PCT No.: PCT/JP04/01178

(30) Foreign Application Priority Data

Feb. 5, 2003 (JP) 2003-028790
Oct. 21, 2003 (JP) 2003-361297
Dec. 17, 2003 (JP) 2003-419776

Publication Classification

(51) Int. Cl.
A47C 31/00 (2006.01)

(52) U.S. Cl. 297/219.11

(57) ABSTRACT

In a skin material for a vehicle, a general surface and a predetermined shape having an outer appearance which is equal to a joint portion obtained by actually bonding a plurality of skin materials are formed in a one-piece skin material in accordance with a transcription, and an outer appearance which is equal to a three-dimensional outer appearance obtained by actually bonding a plurality of skin materials is formed three-dimensionally by one skin material.

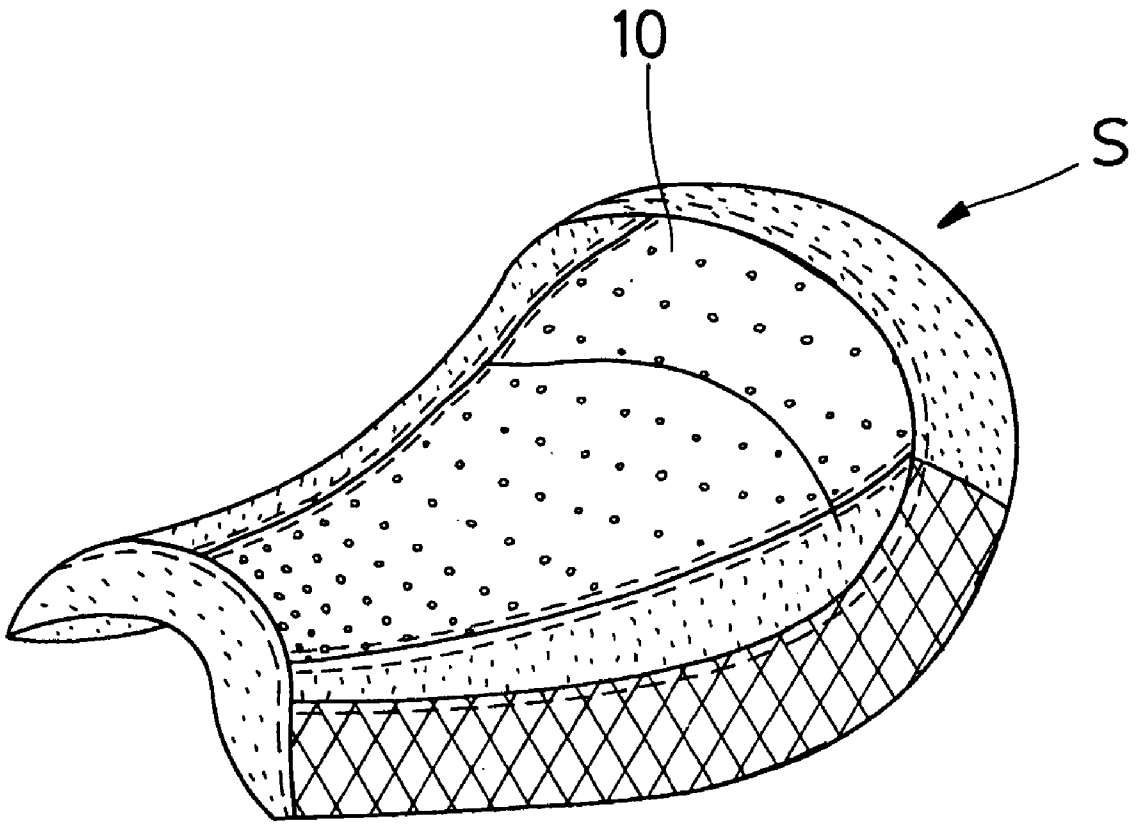

Fig. 1

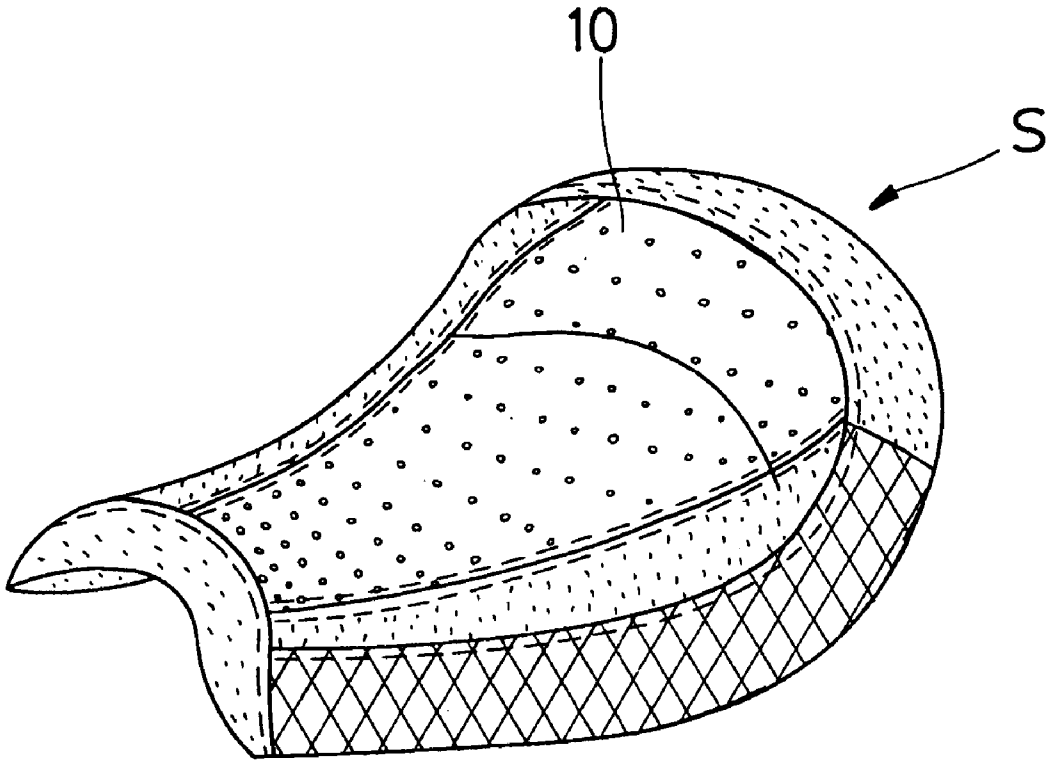

Fig. 2

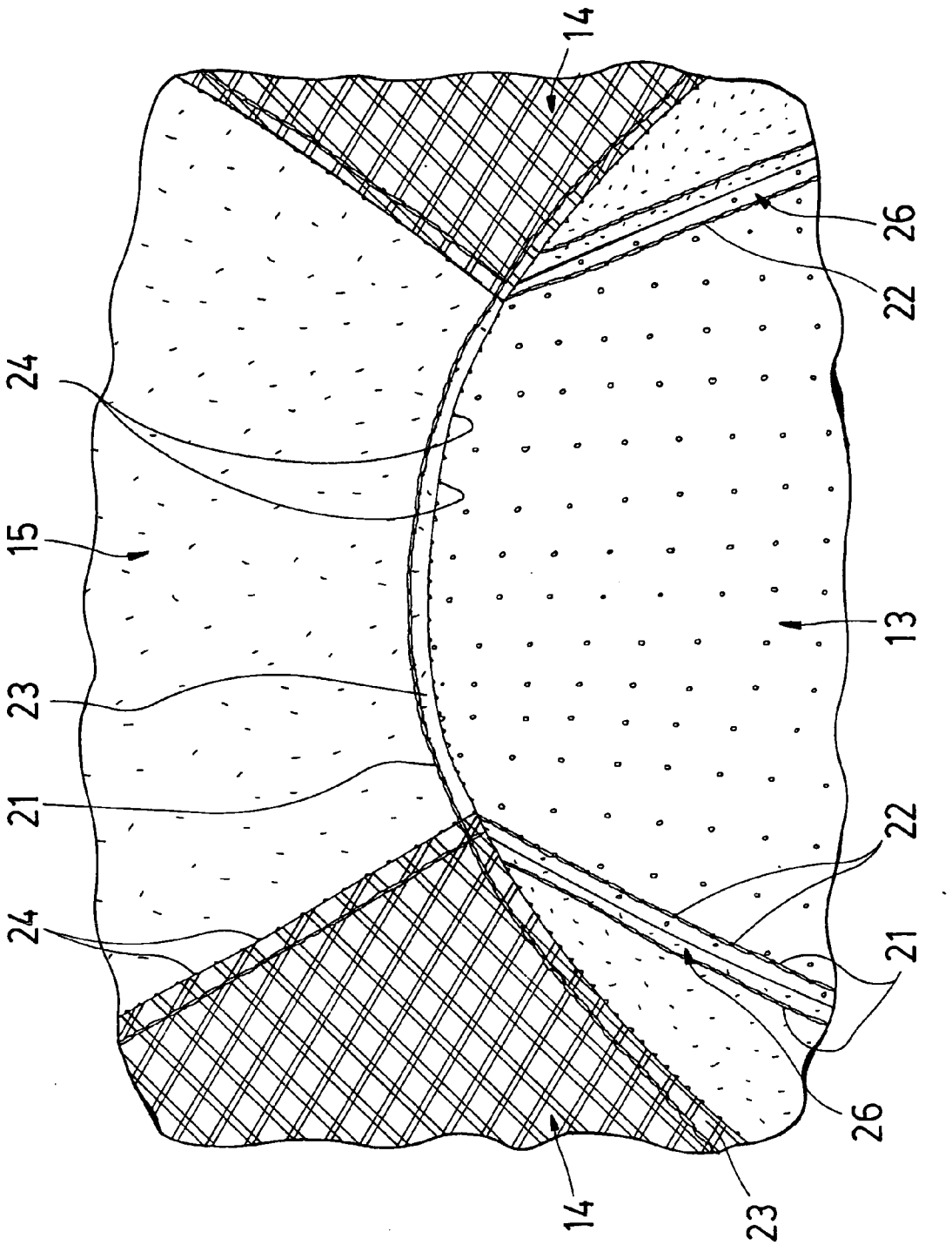

Fig. 3

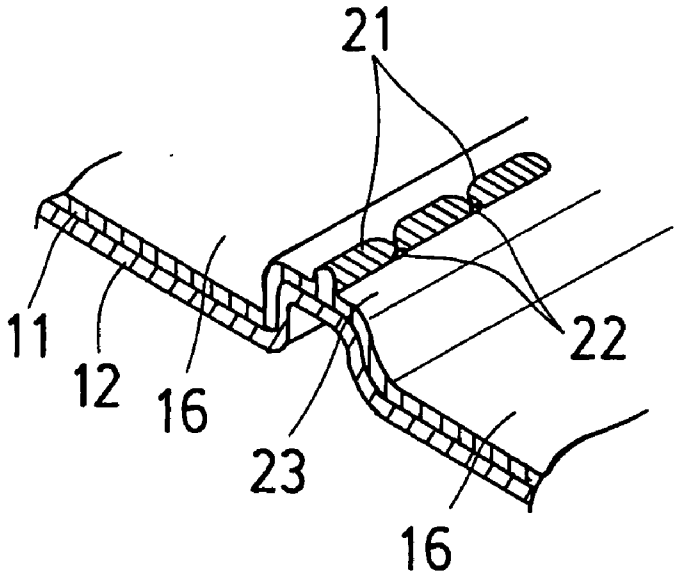

Fig. 4

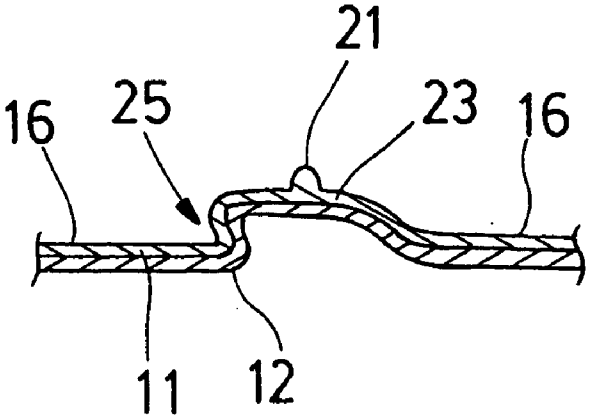

Fig. 5

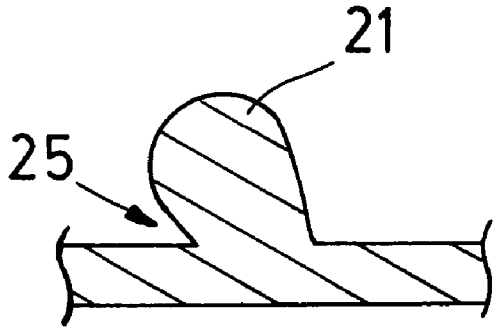

Fig. 6

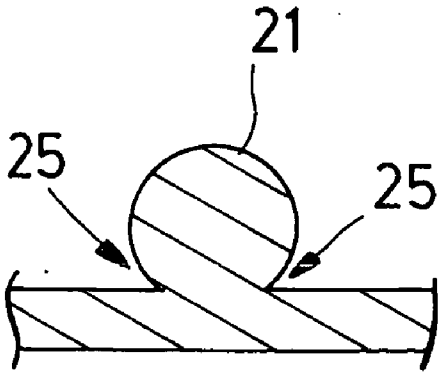

Fig. 7

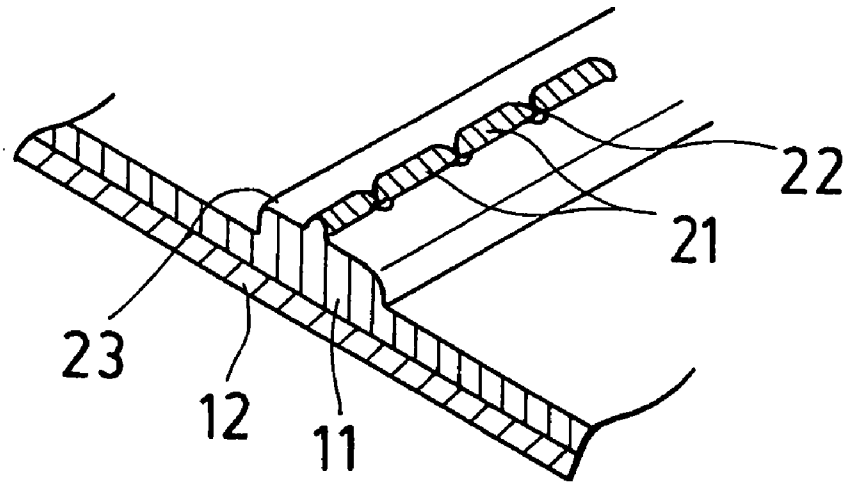

Fig. 8

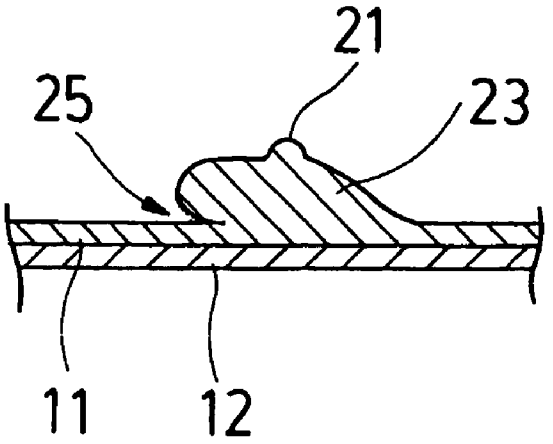

Fig. 9

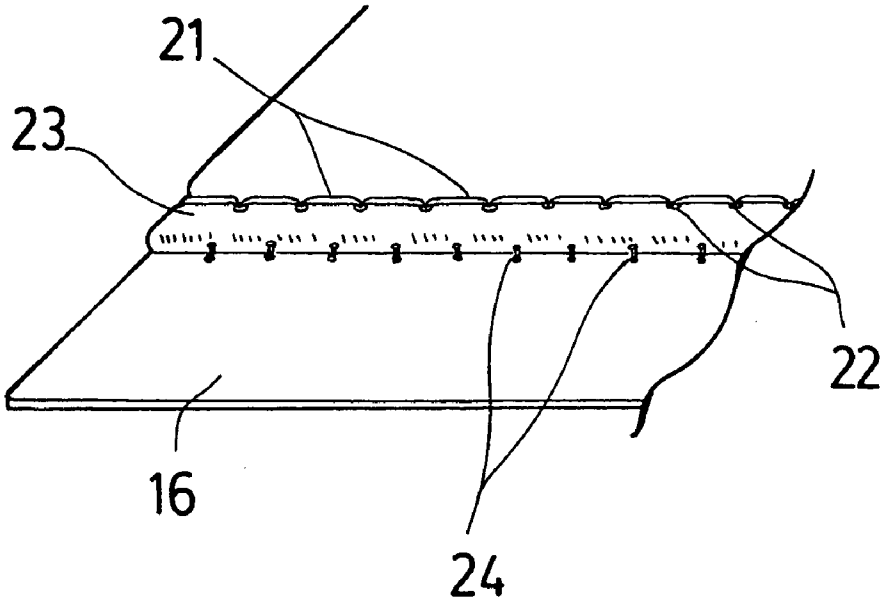

Fig. 1 0

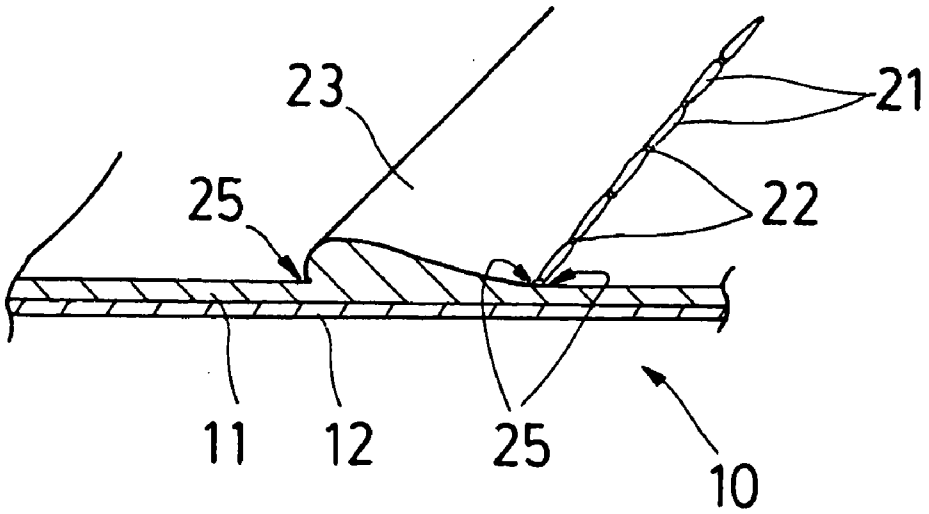

Fig. 1 1

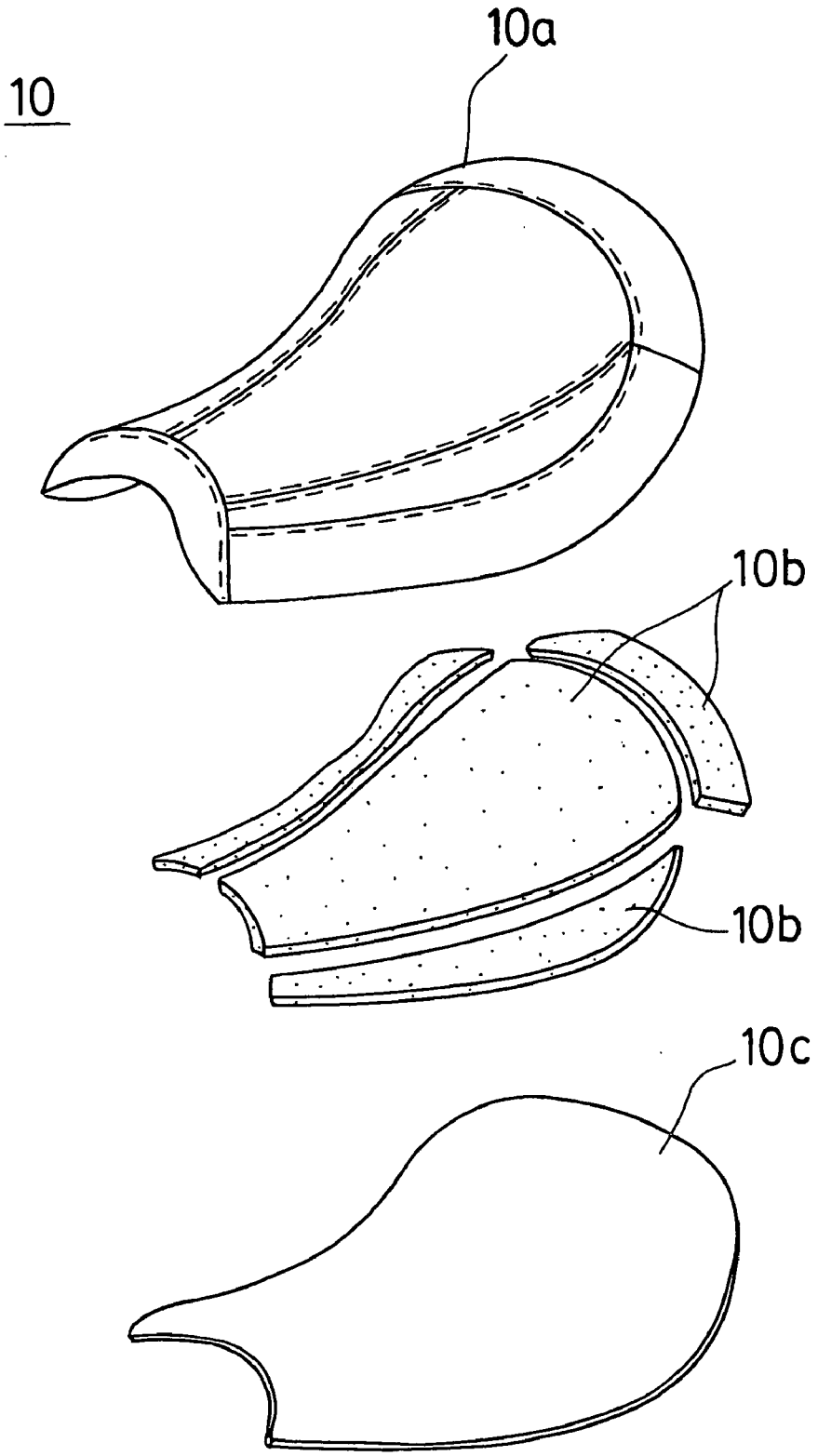

Fig. 1 2

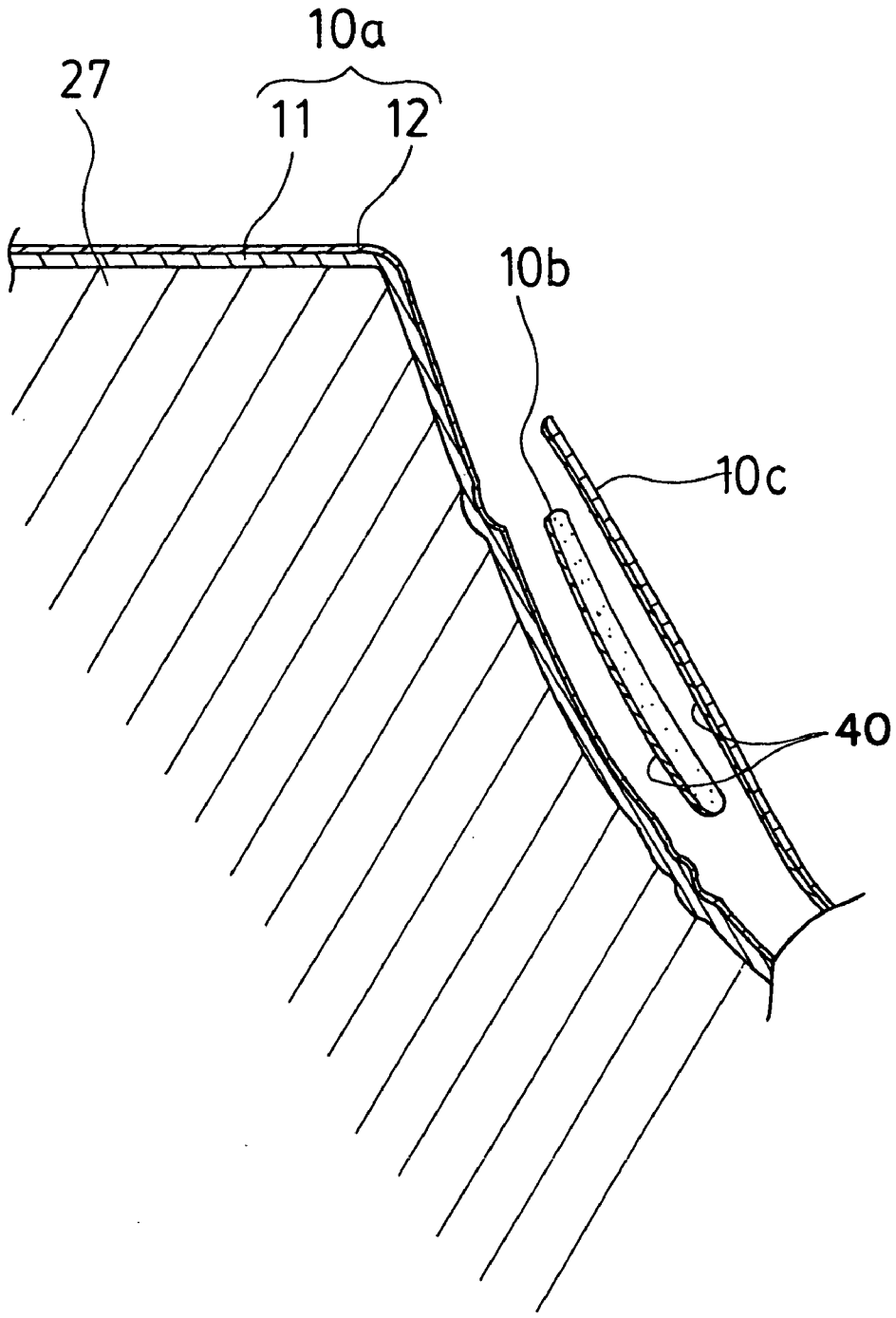

Fig. 1 3

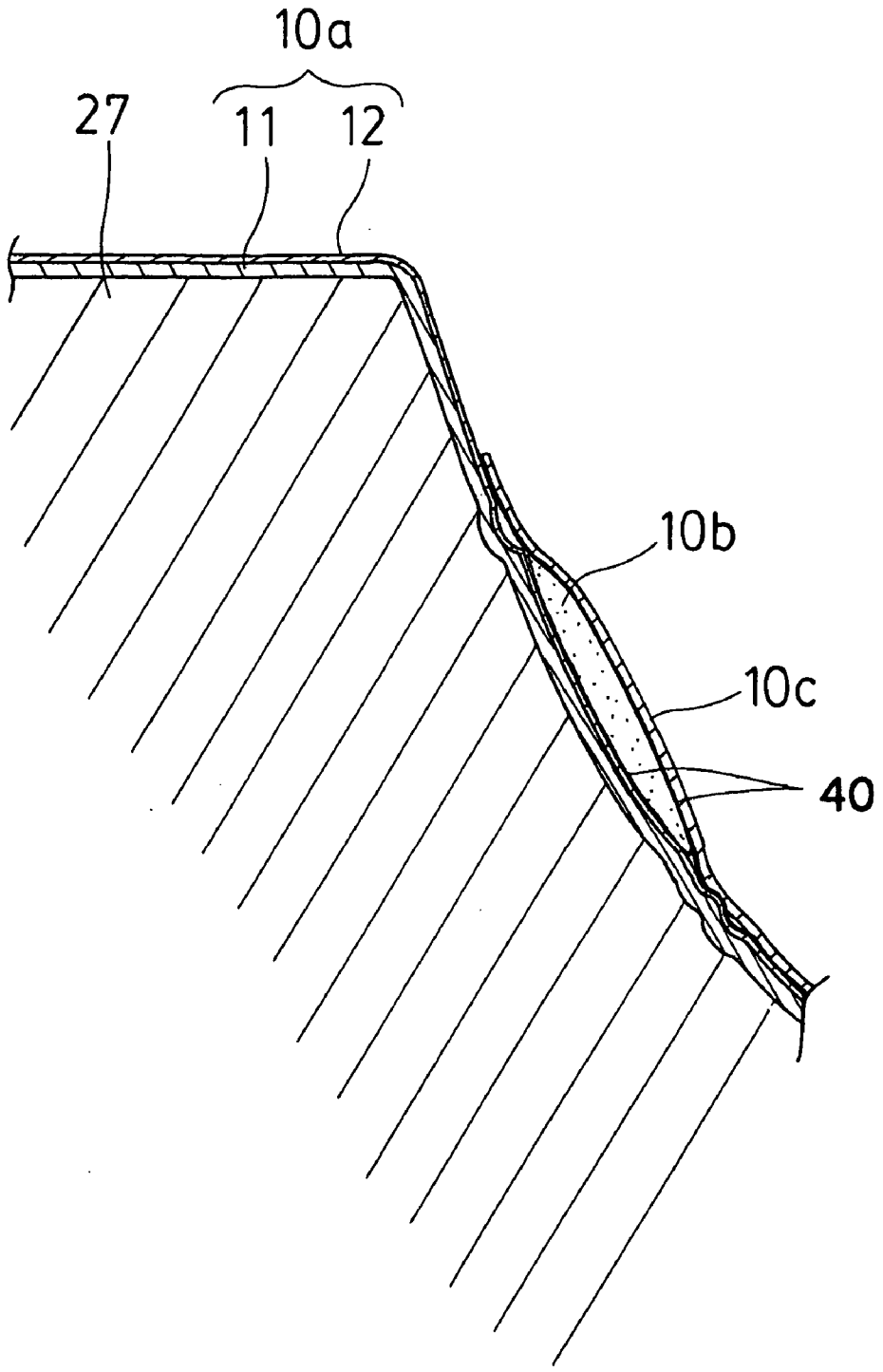

Fig. 1 4

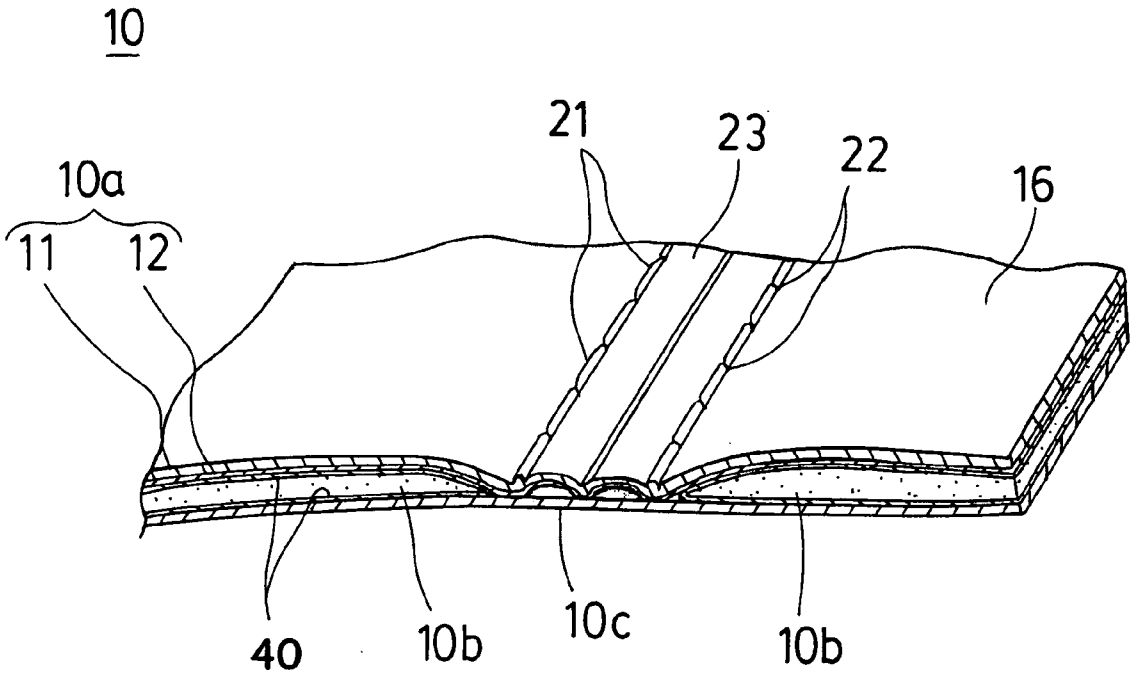

Fig. 1 5

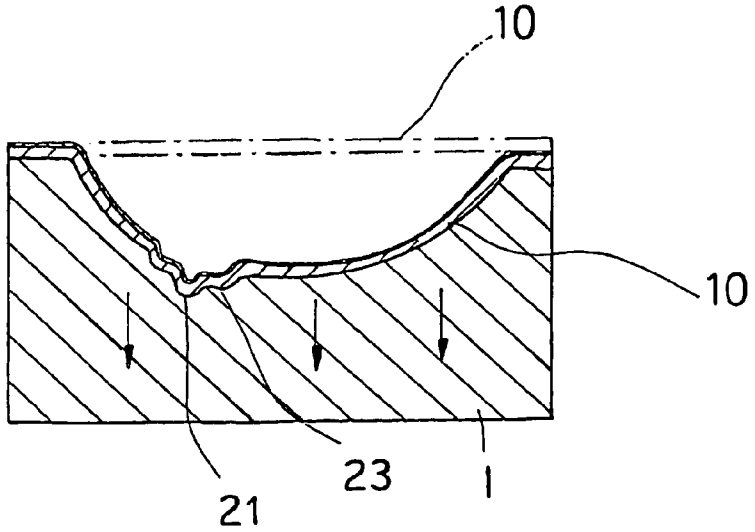

Fig. 1 6

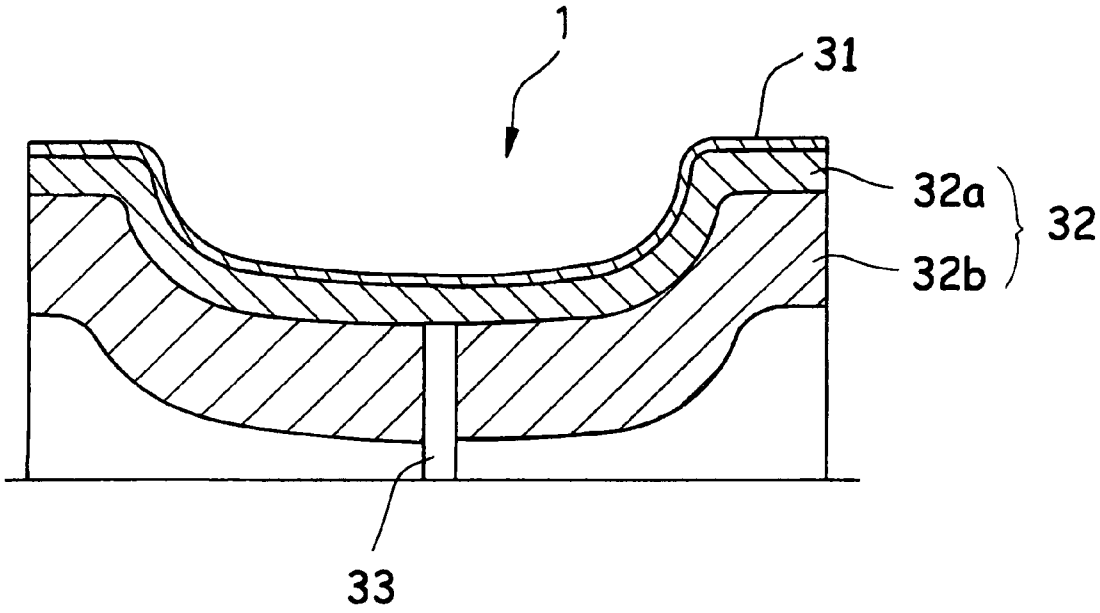

Fig. 1 7

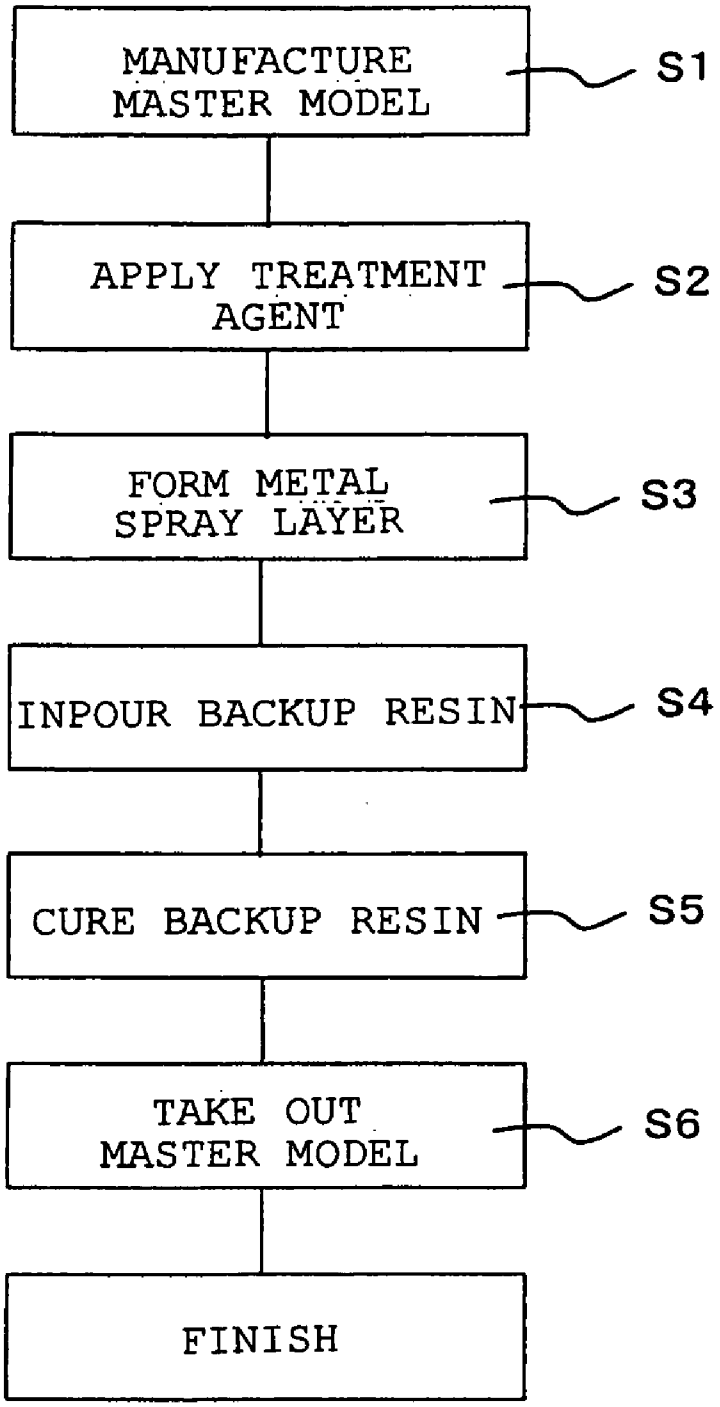
MANUFACTURE MASTER MODEL
S1
APPLY TREATMENT AGENT
S2
FORM METAL SPRAY LAYER
S3
INPOUR BACKUP RESIN
S4
CURE BACKUP RESIN
S5
TAKE OUT MASTER MODEL
S6
FINISH

Fig. 1 8

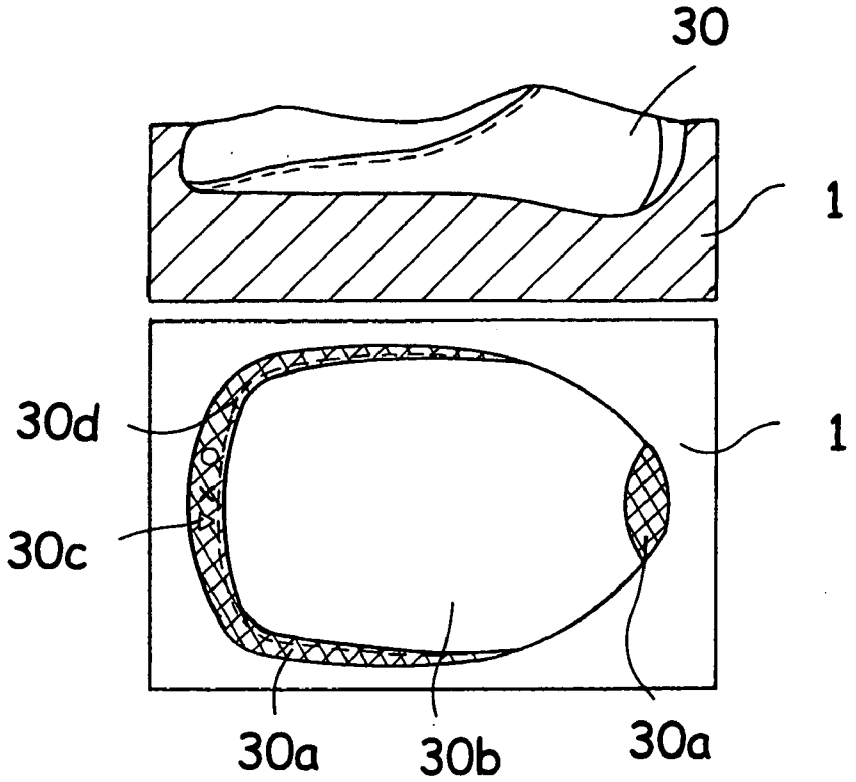

Fig. 1 9

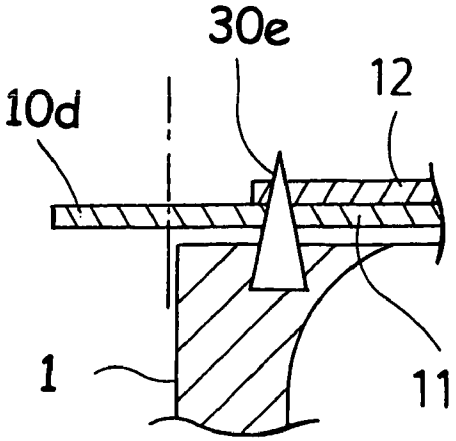

Fig. 20

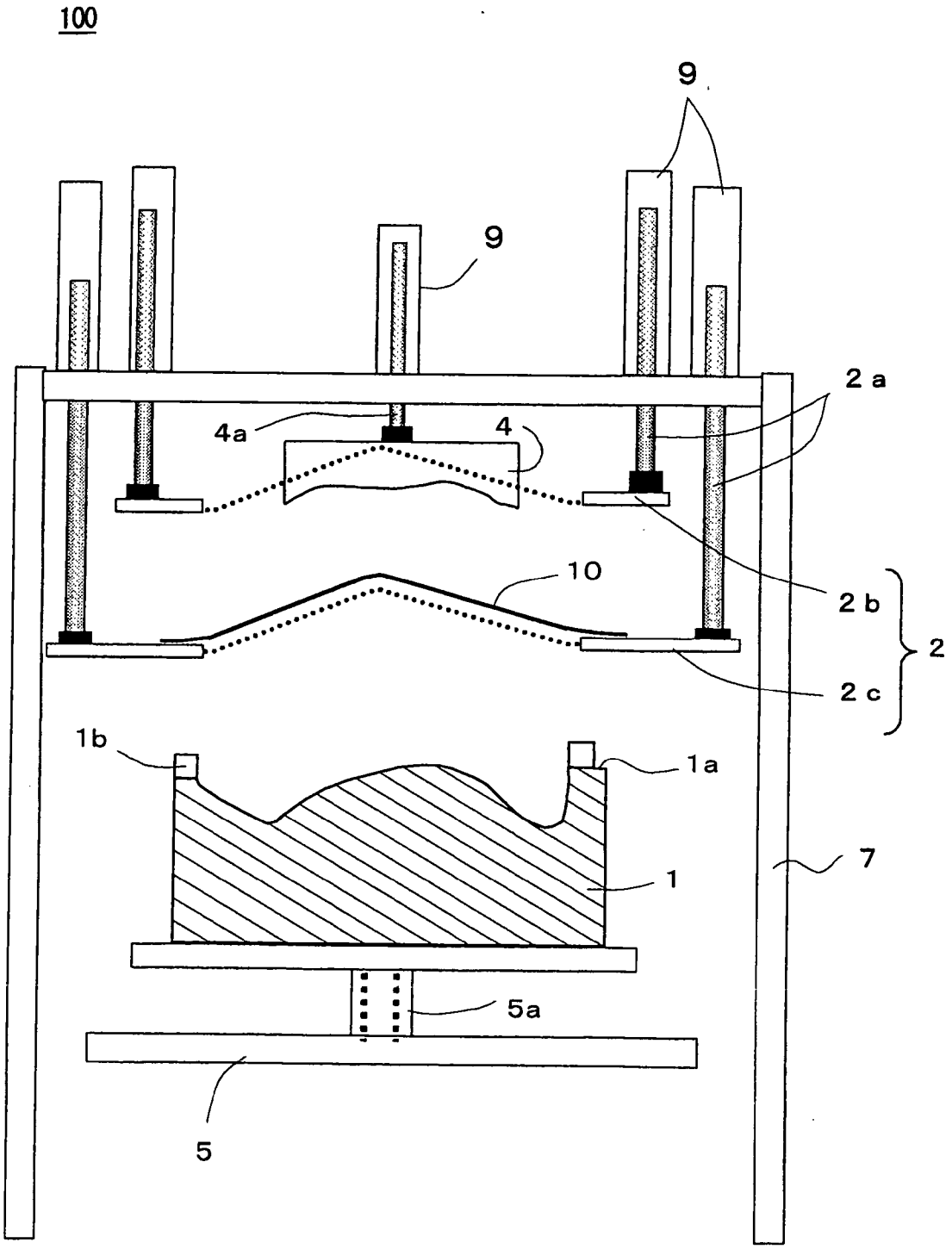

Fig. 2 1

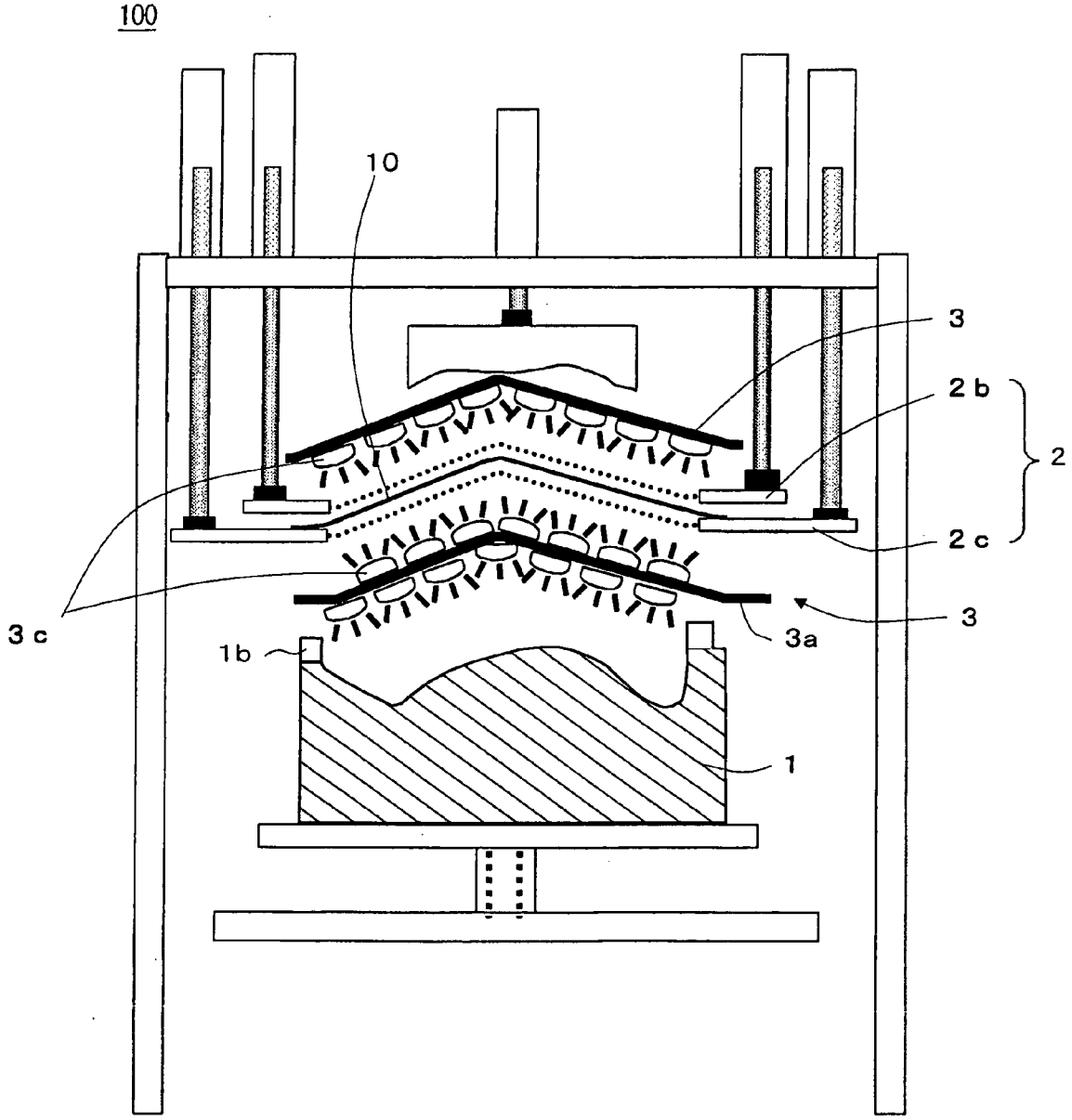

Fig. 2 2

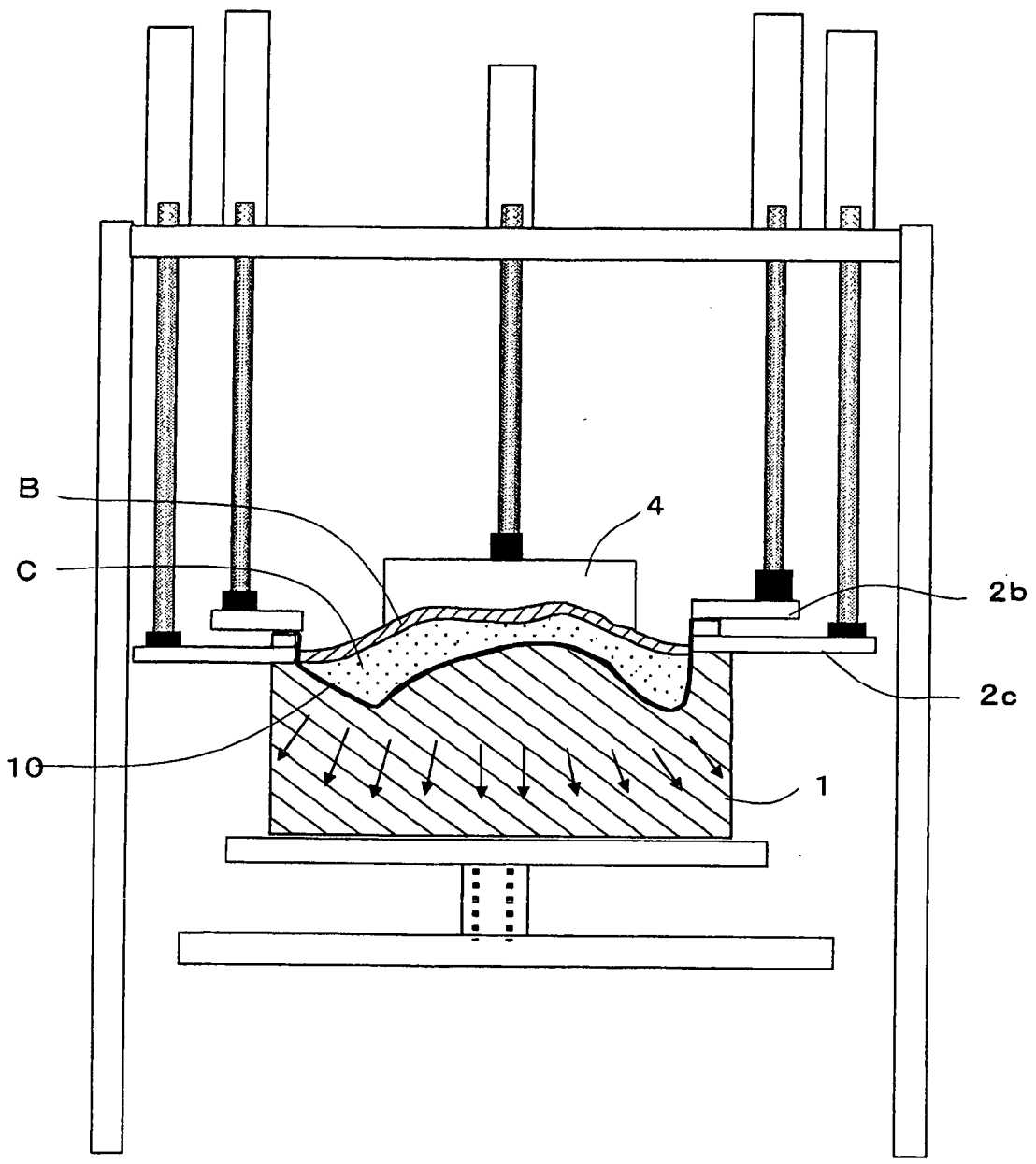

Fig. 2 3

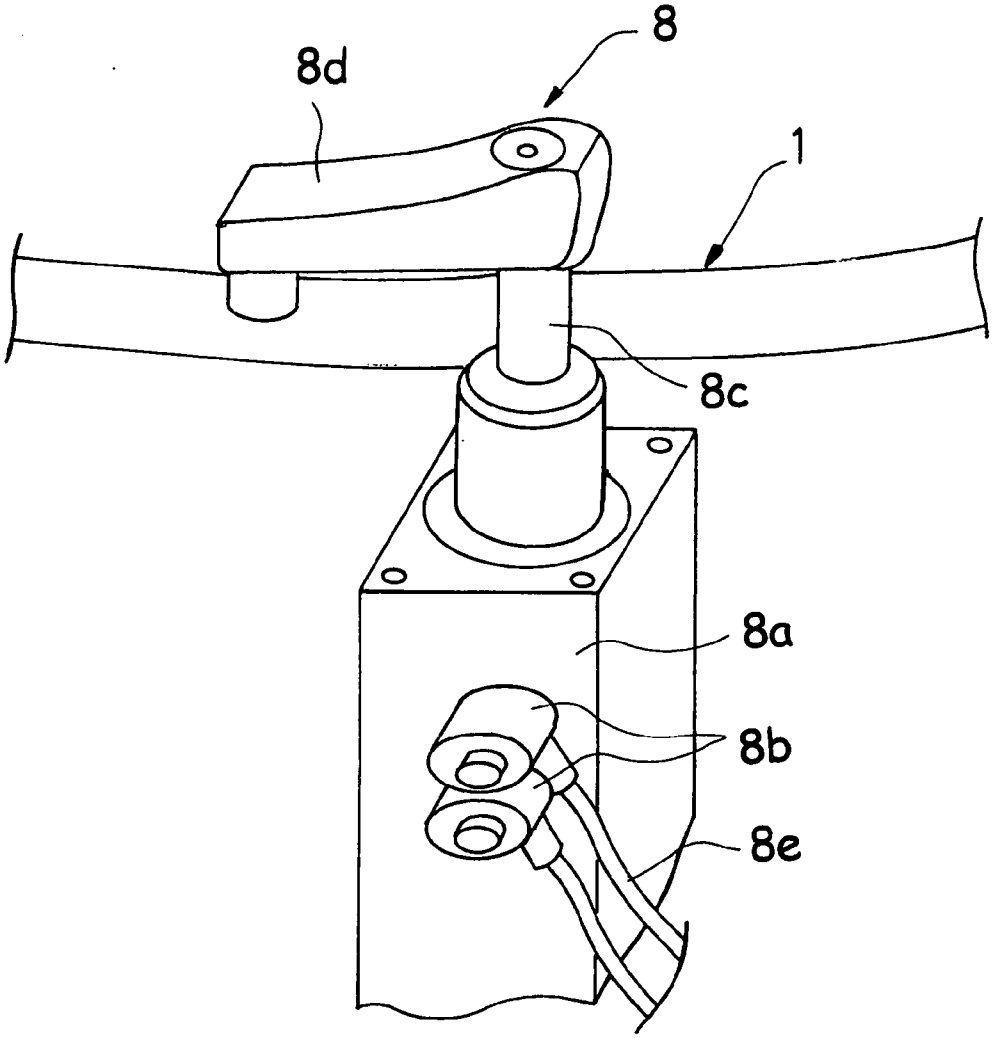

Fig. 24

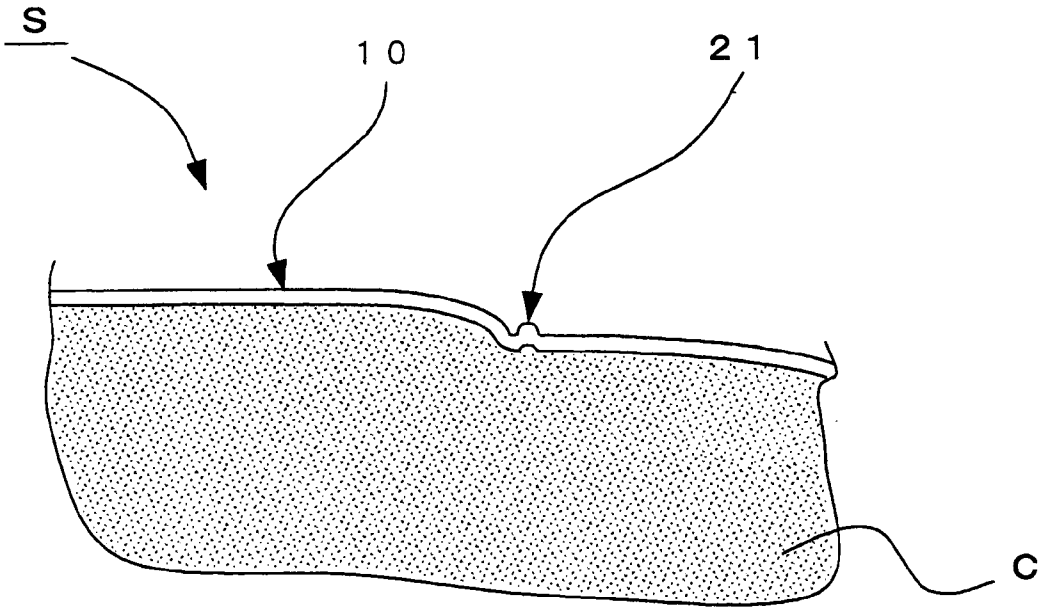

Fig. 25

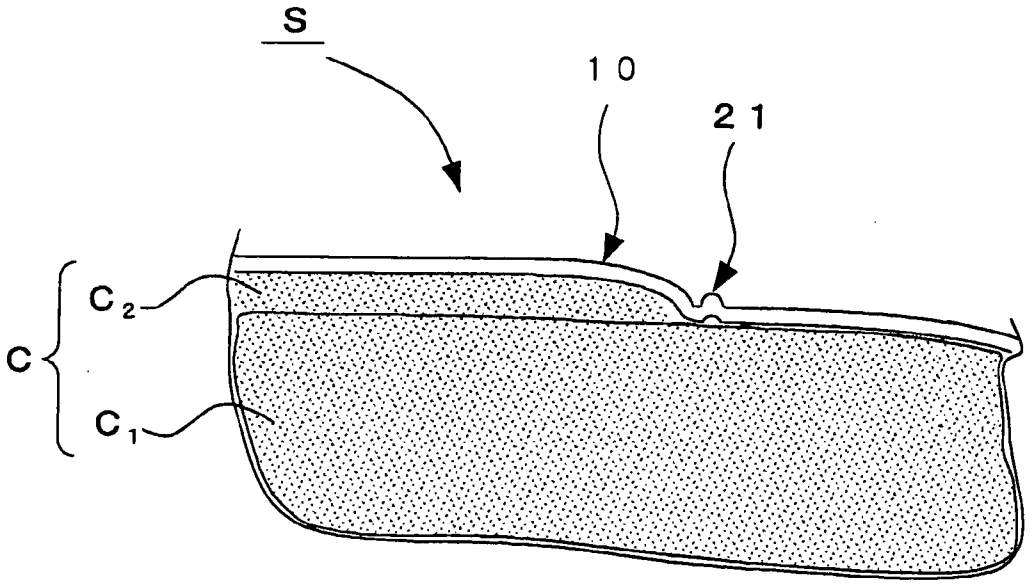

Fig. 26

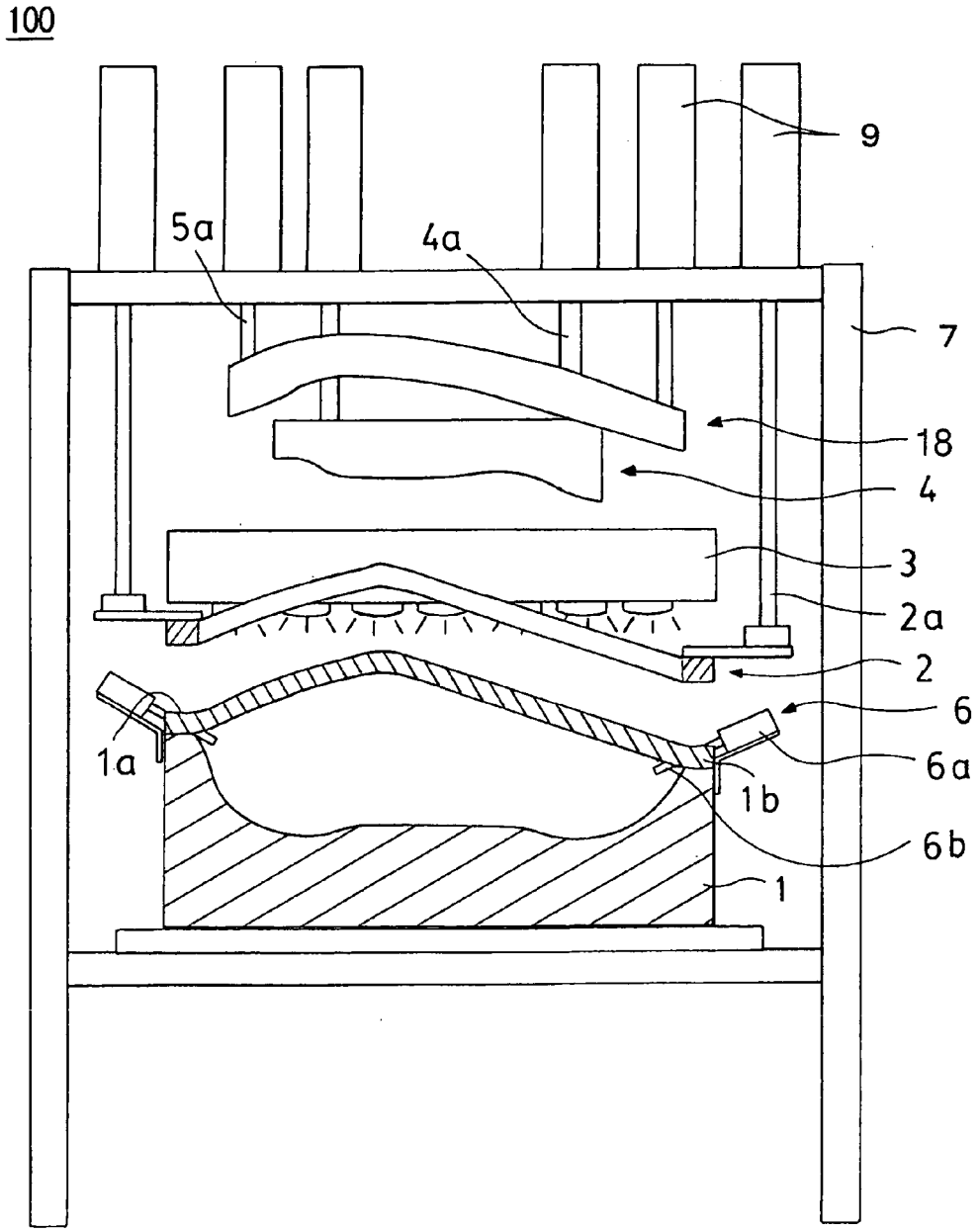

Fig. 27

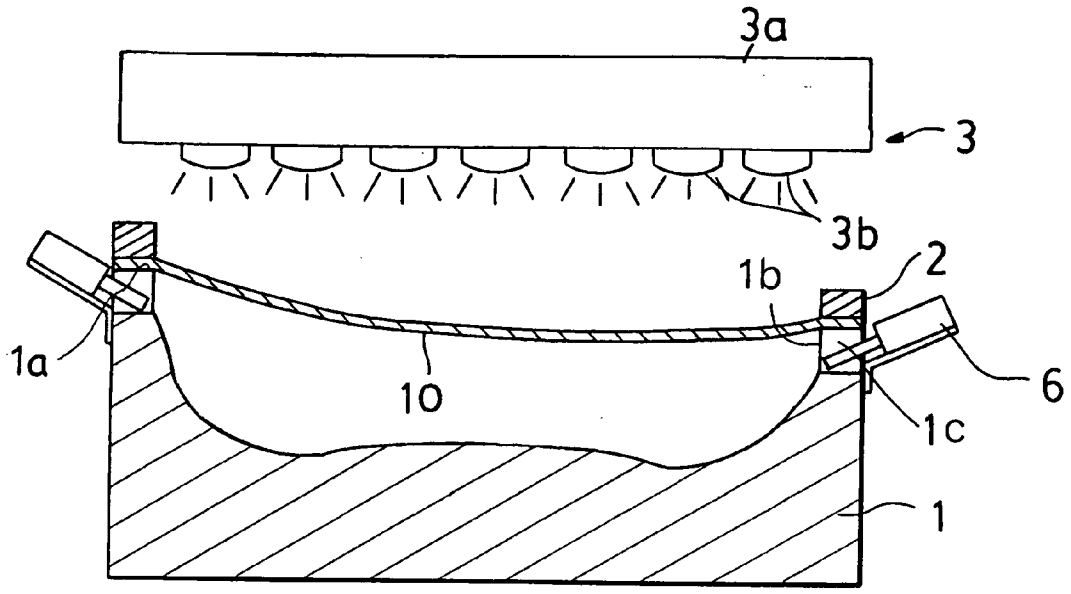

Fig. 28

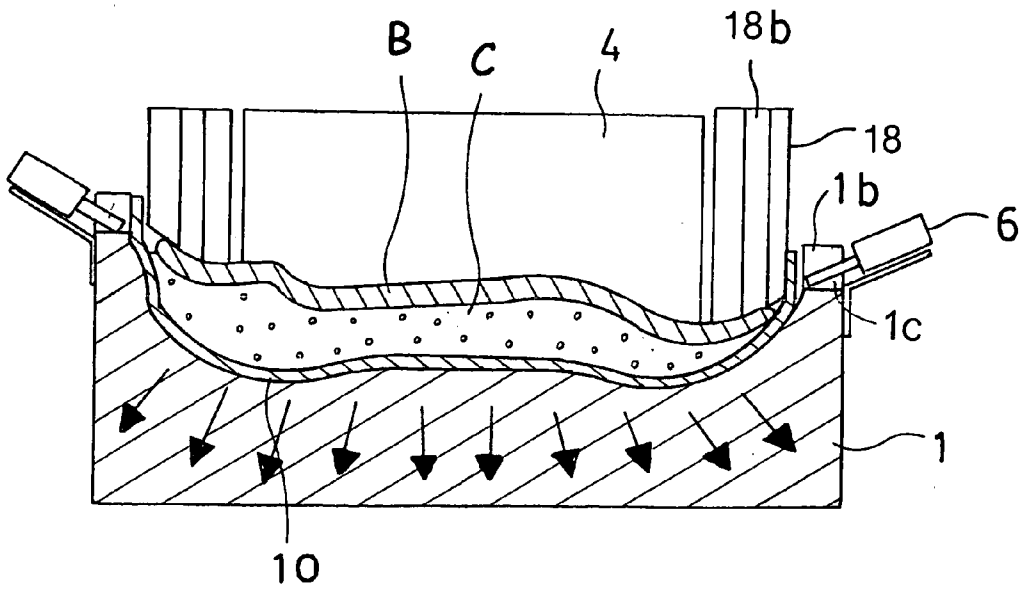

Fig. 29

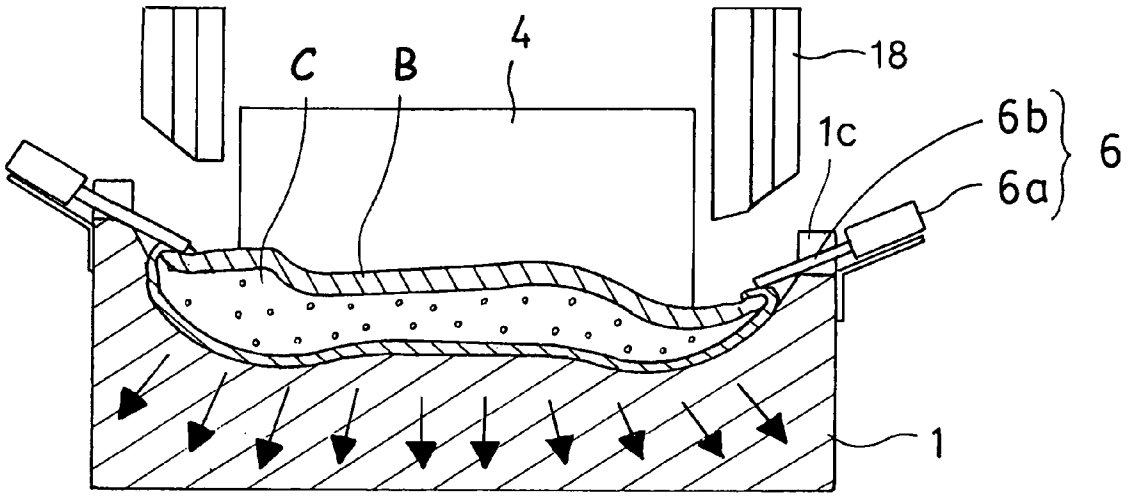

EXTERNAL COVERING MATERIAL FOR MOTOR VEHICLE, MOTOR VEHICLE SEAT, AND APPARATUS FOR PRODUCING THE SEAT

BACKGROUND

[0001] The present invention relates to a skin material for a vehicle, a seat for a vehicle and a manufacturing apparatus of the seat for the vehicle, and more particularly to a skin material for a vehicle having a high-class feeling and a quality design property, a seat for a vehicle and a manufacturing apparatus of the seat for the vehicle.

[0002] In general, a seat of a two-wheel vehicle such as a motorcycle or the like is manufactured by covering a cushion material with a skin material having a weather resistance and fixing an end portion thereof to a lower surface of a bottom plate.

[0003] In accordance with the manufacturing method mentioned above, it is possible to easily and efficiently manufacture the seat for the vehicle. However, since there is no seam which is formed when a natural leather is used as a raw material, there is a disadvantage that the high-class feeling is lacking. Further, a seat is desirable which has a front surface finished in different pattern and luster from the other portions and is rich in design.

[0004] However, when the seam is formed by actually sewing a plurality of skin materials, rain water problematically intrudes from the seam so as to dampen clothes of a passenger with the rain water and deteriorate the cushion material.

[0005] Accordingly, there has been proposed a technique of employing a pressing mold to which a seam pattern and a grain pattern are transcribed, transcribing the seam pattern and the grain pattern in the pressing mold to a flat-shaped skin raw material, cutting the flat-shaped skin material to a predetermined size, thereafter forming in a three-dimensional shape and charging the cushion material, thereby forming the seat (see, for example, Japanese Unexamined Patent Publication No. 2001-46187).

[0006] In accordance with the method mentioned above, it is possible to form a one-piece skin material provided with the seam pattern. However, in the prior art mentioned above, the structure is made such that the seat is formed by transcribing a connection pattern and a fine line pattern as the seam pattern portion in the skin material serving as the flat-shaped raw material, thereafter charging the cushion material in accordance with an integral expansion molding or the like to the skin material which is formed in the three-dimensional shape by applying a vacuum molding and a tension molding, and fixing the end portion of the skin material to a bottom outer portion of the bottom plate.

[0007] Accordingly, when the seam pattern portion is deformed at a time of forming the skin material three-dimensionally, making it impossible to actually bond a plurality of skin materials by sewing so as to faithfully reproduce details of a three-dimensionally produced skin assembly. Therefore, disadvantageously, a flat impression is applied and an artificial-looking image appears.

[0008] Further, in conventional techniques, the predetermined shape is molded in accordance with the vacuum forming by using a ceramic mold **1** in a resin formed product of the skin material or the like (see, for example, Japanese Unexamined Patent Publication No. 9-52282).

[0009] The vacuum forming mold disclosed in the prior art mentioned above is constituted by a silicone rubber serving as a breathable outer mold, and a breathable core material, and the breathable core material is structured by a sintered metal or a porous ceramic.

[0010] However, in the case that the ceramic is used as the vacuum forming mold, a hole diameter of a vacuum hole is about 20 μm, creating a problem in that a ventilation resistance becomes large, a vacuum speed becomes slow, and a manufacturing efficiency is deteriorated. Further, when a porous resin is used as the vacuum forming mold, the hole diameter of the vacuum hole is between 50 and 100 μm in this case. Accordingly, a forming mold which can more efficiently execute the vacuum forming is desired.

SUMMARY

[0011] An object of the present invention is to provide a skin material for a vehicle provided with an outer appearance shape which is equal to an outer appearance of the skin assembly manufactured three-dimensionally by actually sewing or bonding, in accordance with a welding process, a plurality of skin materials, in spite of using a one-piece skin material.

[0012] Further, another object of the present invention is to provide a skin material for a vehicle and a seat for a vehicle which reproduce a three-dimensional outer appearance by arranging a wadding material in a back surface side of the skin material, thereby more clearly highlighting a concavo-convex shape on the surface.

[0013] Further, another object of the present invention is to provide a manufacturing apparatus of a seat for a vehicle which can sufficiently heat a skin material and can efficiently manufacture a seat for a vehicle provided with an outer appearance which has a high-class feeling and is rich in design property.

[0014] In accordance with an embodiment of the present invention, there is provided a skin material for a vehicle, wherein a general surface and a predetermined shape having an outer appearance which is equal to a joint portion obtained by actually bonding a plurality of skin materials are formed in a one-piece skin material in accordance with a transcription, and an outer appearance which is equal to a three-dimensional outer appearance obtained by actually bonding a plurality of skin materials is formed three-dimensionally by one skin material.

[0015] As mentioned above, in accordance with the skin material for the vehicle on the basis of an embodiment of the present invention, since it is possible to three-dimensionally form the outer appearance shape equal to the outer appearance of the skin assembly which is three-dimensionally manufactured by actually sewing a plurality of skin materials, in spite of the one-piece skin, no deformation is generated in the outer appearance shape of the surface at a time of covering the cushion material. It is therefore possible to obtain an outer appearance similar to a real article.

[0016] Further, since the skin material is constituted by the one-piece skin, it is possible to prevent the rain water from making an intrusion even when the skin material is used in

a seat for an outdoor vehicle. Further, since the skin material is structured such as to be provided with a form material arranged in the other portions than the joint portion in a back surface of the skin material and forming a seat surface concavo-convex shape, it is possible to reproduce a three-dimensional outer appearance by simultaneously forming the seat surface concavo-convex shape so as to highlight the concavo-convex shape more clearly.

[0017] The joint portion having the outer appearance equal to the outer appearance obtained by actually bonding a plurality of skin materials is constituted by any one of: a) a joint in accordance with a sewing, b) a joint in accordance with a welding process, and c) an ornamental stitch portion provided in the skin material surface.

[0018] As mentioned above, in accordance with an embodiment of the present invention, since it is possible to form the outer appearance equal to the joint portion obtained by bonding a plurality of skin materials in accordance with the sewing, the welding process and the ornamental stitch portion, it is possible to prepare the seat having various designs. In this case, the ornamental stitch portion is particularly constituted by a pattern portion.

[0019] Further, the joint portion may be formed in a shape protruding from the general surface so as to be formed in an outer appearance obtained by overlapping a plurality of skin materials.

[0020] Further, it is preferable that the skin material is structured such that all or a part of a joint portion shape of a plurality of skin materials, an undercut shape of the joint portion, a shape of a sewing thread, an undercut shape of the sewing thread, a shape of a seam hole, a concavo-convex shape obtained by overlapping the skin materials in the joint portion, and a shape showing a biting state of the sewing thread into the skin material are transcribed.

[0021] As mentioned above, since the skin material for the vehicle in accordance with various embodiments of the present invention is structured such that not only the seam pattern is transcribed, but also all or a part of the undercut shape of the joint portion in the outer appearance of the sewing portion, the sewing thread, the seam hole, the concavo-convex shape of the skin material overlapped in the joint portion and the skin material biting state of the sewing are transcribed, it is possible to faithfully reproduce the outer appearance equal to the outer appearance obtained by actually sewing. Accordingly, it is possible to obtain the skin material for the vehicle which has the high-class feeling without any artificial impression.

[0022] Further, since the structure is made such that the different outer appearances are provided on the boundary of the joint portion or the ornamental stitch portion, the outer appearance in which two or more kinds of skin materials are sewn is obtained, and it is possible to obtain the skin material for the vehicle which is rich in design.

[0023] Further, since the structure is made such that the back surface material is arranged in the form material and the form material is pinched by the back surface material and the skin material, an adhesion property between the form material and the skin material is increased, and the concavo-convex shape on the front surface becomes clearer. Further, since the form material is held by the skin material and the back surface material, the shape of the form material is not lost and it is possible to keep the surface shape in a good condition for a long time.

[0024] In accordance with an embodiment of the present invention, a seat for a vehicle is provided, wherein the seat is covered with a skin material in which a general surface and a predetermined shape having an outer appearance which is equal to a joint portion obtained by actually bonding a plurality of skin materials are formed in a one-piece skin material in accordance with a transcription, and an outer appearance which is equal to a three-dimensional outer appearance obtained by actually bonding a plurality of skin materials is formed three-dimensionally by one skin material.

[0025] Further, in accordance with an embodiment of the present invention, there is provided a manufacturing apparatus of a seat for a vehicle covered with a skin material, wherein the manufacturing apparatus is provided with a forming metal mold for forming the skin material, and the forming metal mold is provided with a porous metal spray layer forming a cavity surface, and a porous backup layer holding the metal spray layer.

[0026] In accordance with an embodiment of the present invention, since the metal mold surface is provided with the metal spray layer, it is possible to form a complex and minute concavo-convex shape in accordance with the original shape, and it is possible to transcribe the complex and minute concavo-convex shape to the surface of the formed product formed in the metal mold in the same manner.

[0027] A thickness of the metal spray layer in accordance with an embodiment of the present invention is set to be equal to or more than 0.7 mm and equal to or less than 1.0 mm. When the thickness of the metal spray layer is equal to or less than 0.7 mm, a disadvantageous crack tends to be generated in the front surface because the layer is too thin. Further, in the case that the thickness of the metal spray layer is larger than 1.0 mm, a ventilation resistance becomes large, and a forming efficiency is deteriorated. Further, a cost increase is caused. Since the forming metal mold is particularly used as a vacuum mold, and the concavo-convex pattern transcribed from the metal spray layer is formed in the front surface of the resin formed product in accordance with the vacuum forming, it is possible to form the concavo-convex pattern having a sharper shape.

[0028] The backup layer is constituted by a first layer and a second layer, a thickness of the first layer is set to be equal to or more than 7.0 mm and equal to or less than 10.0 mm, and a thickness of the second layer is set to be equal to or more than 50.0 mm and equal to or less than 70.0 mm. Accordingly, it is possible to make it breathable while creating a sufficient strength rigidity.

[0029] In the case that the thickness of the first layer is less than 7.0 mm, or the thickness of the second layer is less than 50.0 mm, it is impossible to secure a sufficient rigidity.

[0030] Further, in the case that the thickness of the first layer is larger than 10.0 mm, or the thickness of the second layer is larger than 70.0 mm, the ventilation resistance becomes larger, and the forming efficiency is deteriorated. Further, this increases costs.

[0031] Further, the first layer and the second layer are formed by a metal powder, a diameter of a hole formed

between the powders forming the first layer is set to be equal to or more than 1.5 mm and equal to or less than 2.0 mm, and a diameter of a hole formed between the powders forming the second layer is set to be equal to or more than 3.0 mm and equal to or less than 5.0 mm. Accordingly, it is possible to secure the breathability in the backup layer and the sufficient rigidity.

[0032] In the case that the hole diameter between the powders of the first layer is less than 1.5 mm, or the hole diameter between the powders of the second layer is less than 3.0 mm, a gap between the powders becomes smaller, so that the ventilation resistance becomes larger and the forming efficiency is deteriorated.

[0033] Further, in the case that the hole diameter between the powders of the first layer is larger than 2.0 mm, and in the case that the hole diameter between the powders of the second layer is larger than 5.0 mm, it is disadvantageously impossible to secure the sufficient strength of the metal mold.

BRIEF DESCRIPTION OF THE DRAWINGS

[0034] **FIG. 1** is an pictorial view showing an embodiment of a seat for a vehicle in accordance with an embodiment of the present invention;

[0035] **FIG. 2** is a partly enlarged pictorial view of a skin material used in the seat for the vehicle;

[0036] **FIG. 3** is an enlarged isometric view of a portion in which a sewing thread pattern, a seam hole pattern and a joint portion pattern are formed in the skin material;

[0037] **FIG. 4** is a cross sectional view showing the joint portion pattern provided with an undercut portion;

[0038] **FIG. 5** is a cross sectional view showing the sewing thread pattern in which an undercut portion is provided in one side;

[0039] **FIG. 6** is a cross sectional view showing the sewing thread pattern in which the undercut portion is provided in both sides;

[0040] **FIG. 7** is an isometric view showing a joint portion pattern in accordance with the another aspect of an embodiment;

[0041] **FIG. 8** is a cross sectional view showing a state in which the undercut portion is provided in the joint portion pattern as shown in **FIG. 7**;

[0042] **FIG. 9** is an isometric view showing a pattern expressing a state in which the sewing thread bites into the skin material;

[0043] **FIG. 10** is an isometric view showing an example of another patterning;

[0044] **FIG. 11** is an exploded view of a skin material provided with a wadding material;

[0045] **FIG. 12** is a cross sectional view showing an attaching step of the wadding material;

[0046] **FIG. 13** is a cross sectional view showing an attaching step of the wadding material;

[0047] **FIG. 14** is a cross sectional/isometric view of a skin material provided with the wadding material;

[0048] **FIG. 15** is a cross sectional view showing an example of a forming metal mold;

[0049] **FIG. 16** is a cross sectional view showing an example of the forming metal mold;

[0050] **FIG. 17** is a flowchart showing a manufacturing step of the forming metal mold shown in **FIG. 16**;

[0051] **FIG. 18** is a side/top view showing an example of the forming metal mold;

[0052] **FIG. 19** is view showing an opening peripheral edge portion of the forming metal mold;

[0053] FIGS. **20** to **23** are pictorial schematic views showing an example of a manufacturing apparatus of a seat for a vehicle;

[0054] **FIGS. 24 and 25** are side views showing a seat for a vehicle in which a skin material and a cushion material are integrally expansion molded; and

[0055] FIGS. **26** to **29** are pictorial schematic views showing the other manufacturing apparatus of the seat for the vehicle.

DETAILED DESCRIPTION OF THE PREFERRED EMBODIMENTS

[0056] A description will be given below of various embodiments in accordance with the present invention with reference to the accompanying drawings. In this case, members, arrangements and the like described below do not limit to the present invention, but can be variously modified within the scope of the present invention.

[0057] A skin material **10** in accordance with the present embodiment is mainly used in a seat for a non-enclosed vehicle, and is particularly used in a seat S for a vehicle such as a two-wheel vehicle as shown in **FIG. 1**. In this case, the skin material can be used in a seat for a vehicle such as a three-wheel buggy vehicle, a trapezoid seat type carriage, a construction equipment seat, an agricultural equipment seat, a snow mobile, a water bike and the like without being limited to the seat for the two-wheel vehicle.

[0058] The skin material **10** is constituted by a synthetic resin layer **11** and a fiber base material layer **12** (see **FIGS. 2-4**). The synthetic resin layer **11** may be formed by a polyvinyl chloride resin, a polyolefin resin, an acrylic resin or the like. Various additive agents, such as a plasticizing material, a fixing agent, an antioxidant, a UV ray protective agent, a lubricant, an antistatic agent, a pigment, an inorganic filler and the like may be added to the synthetic resin layer as needed.

[0059] The fiber base material layer **12** may be constituted by a woven cloth such as a woven fabric, a knit fabric and the like, or a non-woven cloth such as a natural fiber, a synthetic fiber and the like. In particular, since the knit fabric has a stretch property and follows to the synthetic resin layer **11** in the case that a sewing thread pattern and a grain pattern are provided in the synthetic resin layer **11**, the knit fabric is preferable.

[0060] In this case, a surface treatment layer, for example, a urethane coating layer, a silicone urethane coating layer and the like may be provided in a front surface of synthetic

resin layer **11**. Further, an antistatic agent, an age resistor, a pigment or the like may be added and blended to the coating layer as needed.

[**0061**] Further, it is preferable that the skin material having a breaking elongation equal to or more than about 200% is used as the skin material **10**. The sewing thread pattern and the grain pattern are sufficiently applied, and the concavo-convex shape is clearly transcribed, by using the skin material **10** having the breaking elongation equal to or more than about 200%.

[**0062**] In the skin material **10** in accordance with the present embodiment, a predetermined shape having an outer appearance equal to the joint portion obtained by actually bonding a plurality of skin materials in accordance with a sewing or a welding process is formed in a surface of the skin material **10** in accordance with a transcription, and the skin material **10** is provided with an outer appearance shape equal to a three-dimensional outer appearance obtained by actually bonding a plurality of skin materials in accordance with the sewing or the welding process while being constituted by a one-piece skin material, and is three-dimensionally formed.

[**0063**] **FIG. 2** is a partly enlarged view of the skin material **10** used in the seat S for the two-wheel vehicle. **FIG. 2** illustrates a part of a part **13** covering a seat surface, a part of a part **14** covering a side surface, and a part **15** covering a rear side surface.

[**0064**] A sewing thread, a seam hole, a skin material overlapping concavo-convex shape of the joint portion and a state in which the sewing thread bites into the skin material are transcribed in the front surface of the skin material **10** in order to form an outer appearance in which a plurality of skin materials are bonded in accordance with sewing while being constituted by the one-piece skin material.

[**0065**] In other words, a sewing thread pattern **21**, a seam hole pattern **22**, a joint portion pattern **23** and a pattern **24** showing a state in which the sewing thread bites into the skin material are formed in the front surface of the skin material **10** in accordance with a transcription.

[**0066**] **FIG. 3** is an enlarged view of a portion in which the sewing thread pattern **21**, the seam hole pattern **22** and the joint portion pattern **23** are formed. The joint portion pattern **23** is formed so as to protrude from a general surface **16** of the skin material **10**. In the example in **FIG. 3**, the synthetic resin layer **11** and the fiber base material layer **12** are curved upward in accordance with a forming, whereby the joint portion pattern **23** is formed so as to bulge.

[**0067**] Since the joint portion pattern **23** is formed in the concavo-convex shape as mentioned above, a state in which two skin materials are overlapped can be expressed in the skin material **10**.

[**0068**] The sewing thread pattern **21** is formed on the joint portion pattern **23**. A state in which two skin materials are sewn in the joint portion can be expressed by the sewing thread pattern **21**.

[**0069**] The sewing thread pattern **21** is a pattern expressing a fine line of a single stitch. A pattern obtained by twining the fibers is formed in the front surface of the sewing thread pattern **21**, and shows an outer appearance such as a real thread.

[**0070**] The seam hole pattern **22** is formed between the sewing thread patterns **21**. The seam hole pattern **22** is formed so as to express an outer appearance in which an end portion of the sewing thread enters into the seam hole.

[**0071**] In this case, as shown in **FIG. 4**, the structure may be made such that an undercut portion **25** is provided in a portion of the joint portion pattern **23**. Since the forming material of the skin material **10** is soft and has an elasticity, the undercut portion **25** can be formed by forcibly drawing off.

[**0072**] The joint portion pattern **23** is formed as an outer appearance protruding toward the general surface **16** of the skin material **10** positioned in a lower side by arranging the undercut portion **25**, the joint portion pattern **23** and the skin material **10** positioned in a lower side appear as separate bodies, and it is possible to express the state in which two skin materials are overlapped, like a real one.

[**0073**] Further, as shown in **FIG. 5**, the undercut portion **25** may be provided in the portion of the sewing thread pattern **21**. The sewing thread pattern **21** can be highlighted by arranging the undercut portion **25** in the portion of the sewing thread pattern **21**. It is possible to form an outer appearance in which the sewing thread pattern **21** and the joint portion pattern **23** are formed as separate bodies, and it is possible to express the state of being actually sewn by the thread like a real one.

[**0074**] The undercut portion **25** may be provided in one side of the sewing thread pattern as shown in **FIG. 5**, or may be provided in both sides of the sewing thread pattern as shown in **FIG. 6**. Further, the undercut portion **25** may be provided alternately or may be provided in a random order in spite of being provided in all of the sewing thread pattern **21**.

[**0075**] **FIG. 7** is an explanatory view showing a joint portion pattern **23** in accordance with another aspect. In the example shown in **FIG. 7**, in order to make the joint portion pattern **23** to protrude rather than the general surface **16** of the skin material **10**, the joint portion pattern **23** is formed so as to bulge by making the synthetic resin layer **11** in the portion of the joint portion pattern **23** thicker than the other portion.

[**0076**] Even in the case that the synthetic resin layer **11** in the portion of the joint portion pattern **23** is made thicker as mentioned above, the state in which two skin materials are overlapped can be more really expressed by employing the structure in which the undercut portion **25** is provided in the portion of the joint portion pattern **23**, as shown in **FIG. 8**, and this structure is preferable.

[**0077**] A pattern **24** expressing a state in which the sewing thread bites into the skin material is further formed in the portion of the joint portion pattern **23**, as shown in **FIG. 9**. When sewing two skin materials, the front surface sides of the skin materials are first aligned with each other and the end portions are sewn, and the skin material positioned in an upper side is next reversed and is sewn while applying a stitch from the front surface side. However, the pattern **24** reproduces a state in which the first sewn sewing thread is exposed to an outer portion.

[**0078**] Further, the stitch applied from the front surface side is formed as the sewing thread pattern **21** on the upper surface of the skin material **10**.

[0079] As mentioned above, in the skin material **10** in accordance with the present embodiment, clearly the sewing thread, the seam hole and the joint portion are transcribed, and it is possible to transcribe the state in which the undercut portion is provided in the sewing thread and the joint portion, and the state in which the sewing bites into the skin material, and the shape relating to the sewing is faithfully restored. The outer appearance equal to the outer appearance obtained by bonding a plurality of skin materials in accordance with the sewing can be reproduced on one skin material in the manner mentioned above.

[0080] Further, the different grain patterns are applied on the boundary of the joint portion pattern **23** in the skin material **10** in accordance with the present embodiment. In the present embodiment, as shown in **FIGS. 1 and 2**, the structure is made such that the different patterns are applied to the portion **13** covering the seat surface, the portion **14** covering the side surface and the portion **15** covering the rear side surface, or the grain pattern is not applied to one of the adjacent portions.

[0081] Further, a pattern portion **26** corresponding to an ornamental sewing portion is provided in the portion **13** covering the seat surface, and there is provided an outer appearance in which the skin materials having the different grain patterns or to which the grain pattern is not applied are bonded on the boundary of the pattern portion **26**. The sewing thread pattern **21**, the seam hole pattern **22**, the joint portion pattern **23** and the pattern **24** expressing the state in which the sewing bites into the skin material are applied respectively to the portions in which the skin materials having the different patterns are adjacent, and there is provided an outer appearance in which a plurality of skin materials are actually bonded in accordance with the sewing.

[0082] In this case, the sewing thread pattern **21**, the seam hole pattern **22**, the joint portion pattern **23** and the like are not limited to the structures mentioned above, but can be freely changed in accordance with the designs.

[0083] For example, in the skin material **10** as shown in **FIG. 10**, there is formed the joint portion pattern **23** provided with the undercut portion **25**, and there is further formed the sewing thread pattern **21** being adjacent to the joint portion **23** and provided with the undercut portion **25**. Further, the seam hole pattern **22** is formed between the sewing thread patterns **21**. Further, the grain pattern is not limited to the structure mentioned above, but may be structured such as to have a different luster or have a portion to which no grain pattern is applied.

[0084] Further, in the embodiment mentioned above, there is shown the structure in which the joint portion pattern **23** protrudes rather than the general surface **16**, however, the joint portion pattern **23** and the general surface **16** may be flat. In this case, for example, the general surface **16** portion adjacent to the joint portion pattern **23** is formed bulging so as to be approximately flush with the joint portion pattern **23**. As mentioned above, since the joint portion pattern **23** and the general surface **16** are formed as the flat shape, the joint portion protrudes toward the back surface side of the skin material, and the state in which the concavo-convex shape does not appear is expressed on the front surface side.

[0085] Further, in the embodiment mentioned above, the description is given of the skin material **10** having the outer appearance in which a plurality of skin materials are bonded in accordance with the sewing, however, the outer appearance is not limited to the sewing, but may be structured such that a plurality of skin materials are bonded in accordance with the welding process.

[0086] In this case, the concavo-convex shape obtained by overlapping the skin materials in the joint portion is transcribed to the skin material and the joint portion pattern is formed in the skin material. Even in the case that the joint portion pattern is formed in accordance with the welding process, the structure may be made such that the undercut portion is provided as needed, and the joint portion pattern and the skin material positioned in the lower side are seen as the independent bodies.

[0087] FIGS. **11** to **14** are explanatory views showing the skin material **10** in accordance with another embodiment. The skin material **10** in accordance with the present embodiment is constituted by a skin **10***a*, a wadding material **10***b*, and a back surface material **10***c*. The skin **10***a* is constituted by the synthetic resin layer **11** and the fiber base material layer **12**.

[0088] The wadding material **10***b* may employ a structure, for example, made of a polyurethane foam, a polyvinyl chloride (PVC) foam, a thermoplastic elastomer olefin (TPO) foam, a polypropylene (PP) foam, a polyethylene (PE) foam or the like.

[0089] The back surface material **10***c* is constituted by a sheet material having an elasticity, and may employ, for example, a resin sheet material made of a polyvinyl chloride resin. Alternatively, a woven fabric, a knit fabric, an unwoven fabric or the like made of a natural fiber or a synthetic fiber is employed.

[0090] In the skin material **10** in accordance with the present embodiment, a predetermined shape having an outer appearance equal to the joint portion obtained by actually bonding a plurality of skin materials in accordance with the sewing or the welding process is formed on the front surface of the skin **10***a* in accordance with the transcription. Accordingly, the skin material **10** is provided with the outer appearance equal to the three-dimensional outer appearance obtained by actually bonding a plurality of skin materials in accordance with the sewing or the welding process while being constituted by the one-piece skin material, and is formed three-dimensionally.

[0091] The shape formed on the front surface of the skin **10***a* is equal to the shape described in the embodiment I mentioned above, and is shown in FIGS. **1** to **10**.

[0092] **FIG. 11** is an exploded perspective view of the skin material **10** in accordance with the present embodiment. As illustrated, the skin material **10** in accordance with the present embodiment is provided with the wadding material **10***b* and the back surface material **10***c* in the back side of the skin **10***a*.

[0093] The wadding material **10***b* is arranged in the other regions than the seam portion of the sewing thread pattern **21** or the like. The wadding material **10***b* is cut into a shape of an arranged position, and is formed at a size which does not cover the seam portion. It is possible to express a full quality feeling on the front surface on the boundary of the seam, by arranging the wadding material **10***b*.

[0094] Further, the back surface material **10***c* is arranged in the wadding material **10***b*, and the back surface material **10***c* is adhered to the wadding material **10***b* and the skin material **10***a* by an adhesive agent. The back surface material **10***c* and the skin **10***a* are bonded at the seam portion, and is structured so as to pinch the wadding material **10***b* by the skin **10***a* and the back surface material **10***c*.

[0095] Since the back surface material **10***c* is provided, the wadding material **10***b* is closely contacted with the skin material **10***a*, the full feeling is effectively obtained in the front surface side, and the seam portion of the skin **10***a* is closely contacted with the back surface material **10***c* so as to form a clear valley. Accordingly, it is possible to highlight the concavo-convex shape of the front surface more.

[0096] **FIGS. 12 and 13** are explanatory views showing an example of an attaching step of the wadding material **10***b* to the skin **10***a*.

[0097] In **FIGS. 12 and 13**, an example in which the pattern is transcribed to the skin **10***a* in accordance with a vacuum forming is shown. When attaching the wadding material **10***b*, the adhesive agent is applied to any one or both of the skin **10***a* and the wadding material **10***b*, and the wadding material **10***b* is adhered to the skin **10***a*.

[0098] Next, the adhesive agent is applied to any one or all of the wadding material **10***b*, the skin **10***a* of a portion in which the wadding material **10***b* is not arranged, and the back surface material **10***c*, and the back surface material **10***c* is adhered to the skin **10***a* and the wadding material **10***b*, as shown in **FIG. 13**.

[0099] The skin material **10** provided with the wadding material **10***b* and the back surface material **10***c* is formed in the manner mentioned above, as shown in **FIG. 14**.

[0100] In this case, the attaching of the wadding material **10***b* to the skin **10***a* is not limited to the method shown in **FIGS. 12 and 13**. In other words, the wadding material **10***b* and the back surface material **10***c* may be attached in a state in which the skin **10***a* does not exist within the mold.

[0101] Further, the wadding material **10***b* and the back surface material **10***c* may be previously attached to the skin **10***a* and thereafter transcribed to the skin **10***a*.

[0102] Further, the skin **10***a* and the back surface **10***c* may be welded by a welder in the joint portion therebetween.

[0103] The seat S for the vehicle can be formed by using the skin material **10** mentioned above.

[0104] The seat S for the vehicle is constituted by the skin material **10**, the cushion material and the bottom plate. The seat S for the vehicle is formed by mounting the cushion material on the bottom plate and covering with the skin material **10**, and a terminal portion of the skin material **10** is firmly fixed to the bottom plate in accordance with a staple (not shown), the welding or the like.

[0105] The cushion material may be formed by a soft foam material, for example, an urethane foam, a polypropylene (PP) foam or a polyethylene (PE) foam, and is mounted on the bottom plate. The bottom plate may be formed, for example, a polypropylene (PP), an ABS resin or the like, however, it is preferable to secure a rigidity without increasing a weight of the bottom plate by using the bottom plate formed by using a glass-filled polypropylene (PPG) or a filler-filled polypropylene (PPT) corresponding to a fiber reinforced resin. For example, a carbon fiber may be mixed as a reinforcing fiber to the PPT.

[0106] The transcription of each of the shapes to the skin material **10** is executed, for example, in accordance with the vacuum forming as mentioned above, however, the other methods can be employed such as a welding method, a mold pressing method, a pressure forming method, an injection forming method, a blow forming method and the like.

[0107] In the case that the transcription is executed in accordance with the vacuum forming or the pressure forming by using the forming metal mold **1** made of the porous material having micro holes, as shown in **FIG. 15**, it is possible to simultaneously execute the forming of forming the skin material **10** in the three-dimensional shape and the transcription of the various patterns such as the sewing thread pattern **21**, the joint portion pattern **23** and the like.

[0108] Accordingly, no deformation is later generated in the sewing thread pattern **21** and the joint portion pattern **23**. Therefore, it is possible to faithfully and reproduce even a detail portion obtained by actually bonding a plurality of skin materials in accordance with the sewing as a complete equal shape, in the front surface of the seat corresponding to the product, and it is possible to obtain the outer appearance which is more similar to the real thing. Further, since it is not necessary to position the pattern as is different from the case that the skin material **10** is formed later, it is possible to improve a working efficiency.

[0109] As the forming metal mold **1** made of the porous material mentioned above, it is preferable to employ a forming metal mold **1** made of a porous material having micro holes of a hole diameter between 3 μm and 25 μm, preferably between 5 μm and 25 μm. In the case that the hole diameter is smaller than 3 μm, a vacuum efficiency is inferior, and in the case that the hole diameter is larger than 25 μm, a precise transcription can not be executed. In the case that the hole diameter is within the range mentioned above, more preferably, between 10 μm, and 20 μm, it is possible to execute the precise transcription without lowering the vacuum efficiency, and it is possible to obtain a result having a best balance of a production efficiency and a transcription reproducibility.

[0110] Alternatively, a forming metal mold shown in **FIG. 16** is used for forming the skin material **10**.

[0111] The forming metal mold **1** in accordance with the present embodiment is constituted by a vacuum forming mold, for example, a skin forming metal mold in which the skin material of the seat of the motor cycle is formed. The forming metal mold **1** is structured such as to be provided with a porous metal spray layer **31** and a porous backup layer **32**.

[0112] The metal spray layer **31** is structured so as to form a cavity surface of a metal mold, is made of an aluminum, a zinc or the other metals, and is formed by thermal spraying a metal simple substance or an alloy thereof to a master model. The thermal spraying method employs a known thermal spraying method such as a flame spraying, an arch spraying, a plasma spraying or the like.

[0113] Since the metal spray later **31** is formed by thermal spraying the metal to the master model, the sprayed metal is

closely contacted with a concavo-convex shape of the master model, and the concavo-convex shape of the master model is faithfully transcribed to the front surface of the metal spray layer.

[0114] Accordingly, in the case of the metal mold forming the skin material of the, motor cycle as in the present embodiment, it is possible to preferably transcribe a grain leather pattern of the skin material to the metal spray layer **31**.

[0115] A pore diameter, a pore volume and the like of the metal spray layer **31** can be controlled on the basis of a used metal material, an injection pressure, a temperature of a droplet, a spray distance, a thermal spray material supply speed and the like, and a film thickness can be adjusted.

[0116] In the present embodiment, the thickness of the metal spray layer **31** is set to be equal to or more than 0.7 mm and equal to or less than 1.0 mm. In other words, in the case that the thickness of the metal spray layer **31** is equal to or less than 0.7 mm, a crack disadvantageously tends to be generated on the front surface because the layer is too thin.

[0117] Further, in the case that the thickness of the metal spray layer **31** is larger than 1.0 mm, the ventilation resistance becomes large, and the forming efficiency is deteriorated. Further, a cost increase is caused. Accordingly, it is preferable that the metal spray layer **31** is formed within the range of the numerical value mentioned above.

[0118] The backup layer **32** is constituted by a first layer **32***a* and a second layer **32***b*.

[0119] The first layer **32***a* and the second layer **32***b* are constituted by a metal powder and a resin combining the metal powder, and are formed porous.

[0120] In the present embodiment, an aluminum grid is used as the metal powder. The manufacturing cost can be reduced by using the aluminum grid which is inexpensive as the metal powder, and a preferable structure can be obtained.

[0121] The first layer **32***a* and the second layer **32***b* are formed by combining the metal powder such as the aluminum grid or the like by a thermosetting resin. For example, an epoxy resin may be used as the thermosetting resin.

[0122] In the present embodiment, a thickness of the first layer **32***a* is set to be equal to or more than 7.0 mm and equal to or less than 10.0 mm. Further, a thickness of the second layer **32***b* is set to be equal to or more than 50.0 mm and equal to or less than 70.0 mm.

[0123] A sufficient breathability quality can be secured in each of the layers by forming each of the layers within the above thickness range, and it is possible to secure a strength for the layers.

[0124] Further, in the present embodiment, a diameter of hole between the grains constituting the first layer **32***a* is set to be equal to or more than 1.5 mm and equal to or less than 2.0 mm. Further, a diameter of a hole formed between the grains of the second layer **32***b* is set to be equal to or more than 3.0 mm and equal to or less than 5.0 mm.

[0125] A gap formed between the grains is not necessarily formed in a circular shape. In the case that the gap between the grains is not formed in the circular shape, a diameter of a virtual circle contacting with each of the grains forming the gap is within the range mentioned above.

[0126] In the case that the diameter of the hole formed between the grains of the first layer **32***a* is less than 1.5 mm, or in the case that the diameter of the hole between the grains of the second layer **32***b* is less than 3.0 mm, the gap between the grains becomes small so that the ventilation resistance becomes greater and the forming efficiency is deteriorated. Accordingly, it is desirable to set the diameter of the hole formed between the grains mentioned above to the range mentioned above.

[0127] Further, in the case that the hole diameter between the grains of the first layer **32***a* is larger than 2.0 mm, and in the case that the hole diameter between the grains of the second layer **32***b* is larger than 5.0 mm, it is disadvantageously impossible to secure a sufficient strength of the metal mold.

[0128] In order to secure the strength of the metal mold, a reinforcing rib **33** constituted by a wood frame, a metal frame or the like may be buried in the backup layer **32**.

[0129] In this case, in the present embodiment, the breathability and the metal mold strength are secured by forming the backup layer **32** by two layers, however, the backup layer may be formed by one layer, or three or more layers.

[0130] **FIG. 17** shows a flowchart of the manufacturing steps for forming metal the mold **1** in accordance with an embodiment of the present invention.

[0131] In a first step S**1**, the master model is manufactured. In the present embodiment, since the metal mold is structured so as to form the skin material of the motor cycle seat, the seat for the two-wheel vehicle is formed as the master model.

[0132] The seat for the two-wheel vehicle is conventionally known, and is formed by mounting the cushion material on the bottom plate and covering with the skin material.

[0133] In a second step S**2**, the surface treatment material is applied to the master model. Further, in a third step S**3**, the metal is sprayed to the front surface of the master model. The sprayed metal is closely contacted with the front surface of the master model, and the grain pattern of the front surface of the master model is faithfully copied.

[0134] Further, the step controls the used metal material, the injection pressure, the temperature of the droplet, the spray distance, the supply speed of the spray material and the like, forms the porous metal spray layer **31**, and secures the breathability in the metal spray layer **31**.

[0135] In a fourth step S**4**, the backup resin is inpoured. In the present embodiment, the backup resin forming the first layer **32***a* and the backup resin forming the second layer **32***b* are respectively inpoured.

[0136] In a fifth step S**5**, the forming metal mold **1** in the halfway step is placed in an environment kept at a predetermined temperature. When a predetermined time has passed under the environment, the backup resin is cured.

[0137] When the backup layer **32** constituted by the metal spray layer **31**, the first layer **32***a* and the second layer **32***b*

is formed in the manner mentioned above, the master model is taken out at the end, and the forming metal mold **1** is finished.

[**0138**] In this case, a step of setting a plurality of needles to the master model may be added prior to the third step S**3**.

[**0139**] A plurality of needle holes can be provided in the metal spray layer **31** at a time of forming the metal spray layer **31** in the third step S**3**, by setting the needles to the master model. The breathability can be increased in the metal spray layer **31** provided with the needle holes, and it is possible to shorten the forming time at a time of the vacuum forming.

[**0140**] Further, it is possible to use the structure shown in **FIGS. 18 and 19**, as the forming metal mold **1**.

[**0141**] A porous electroforming vacuum forming metal mold is used as the forming metal mold **1**. Since the porous electroforming vacuum forming metal mold is used as mentioned above, the skin material **10** is adsorbed to the metal mold from all the directions at a time of executing an evacuation, and is closely contacted with the inner side surface of the metal mold uniformly.

[**0142**] Further, it is possible to faithfully reproduce the narrow grain pattern and the complex drawing to the inner side surface of the metal mold because of the electroforming metal mold, and it is possible to obtain the formed produce which is rich in design property.

[**0143**] **FIG. 18** shows a state in which the forming metal mold **1** in accordance with an embodiment of the present embodiment is seen from the above. As illustrated, the forming metal mold **1** in accordance with the present embodiment is structured such that a metal mold inner surface **30** is provided with a portion **30***a* in which the grain pattern is formed and a portion **30***b* in which the grain pattern is not formed, in such a manner that the grain pattern is applied to the front portion and the rear portion of the seat S for the vehicle.

[**0144**] Further, a predetermined design or character is formed in the portion **30***a* in which the grain pattern is formed, in the inner surface side of the forming metal mold **1**. The predetermined design or character, for example, corresponds to a character **30***c* showing a product mark or a sewing thread pattern **21**, and a higher-class or quality feeling can be provided in the seat S for the vehicle by applying the design or the character.

[**0145**] In this case, the luster may be differentiated between the portion in which the sewing thread pattern **21** or the grain pattern is applied, and the other portions in the skin material **10** of the seat S for the vehicle. For example, since the sewing thread pattern **21** expresses the seam, the portion of the sewing thread pattern **21** is delustered and the other portions are formed in an outer appearance having more luster than the portion of the sewing thread pattern **21**. Accordingly, it is possible to form the portion of the sewing thread pattern **21** in the outer appearance more similar to the actual seam.

[**0146**] Further, in the case that the grain pattern is formed, the portion to which the grain pattern is applied is delustered, and the portion having no grain pattern is set in the state having the luster. Accordingly, it is possible to form the portion to which the grain pattern is applied in the outer appearance similar to the natural leather.

[**0147**] As mentioned above, in order to change the state of the luster in accordance with the portion of the skin material **10**, in the present embodiment, the surface shape is differentiated between the portion to which the sewing thread pattern **21** and the grain pattern are applied, and the other portions, in the forming surface of the forming metal mold **1**.

[**0148**] In other words, the surface state of the portion to which the sewing thread pattern **21** and the grain pattern are applied is made rougher than the surface state of the other portions. Accordingly, the portion of the skin material **10** formed by the rough surface state portion is reflected by the surface state so as to be in the delustered state, and the other portions are formed as the state having more luster.

[**0149**] In the present embodiment, the metal mold having the different surface states in the portions is formed as mentioned above by executing a printing to the master model of the metal mold. In other words, the master model forming the model of the metal mold is first prepared at a time of preparing the metal mold, however, the printing is applied to the master model in accordance with a method such as a silk screen printing or the like. Accordingly, the portion to which the printing is applied can be made in the rougher surface state than the other portions.

[**0150**] In the skin material of the master model (hereinafter, refer to as a master model skin material), the portion of the grain pattern is structured by the natural leather, and the other portions are structured by the synthetic leather such as the polyvinyl chloride or the like. The master model skin material is formed by sewing a cut piece cut in a predetermined shape.

[**0151**] Further, the seam sewing the cut piece is transcribed to the metal mold so as to form the sewing thread pattern **21** of the seat S for the vehicle, and the surface shape of the natural leather is transcribed to the metal mold so as to form the grain pattern of the seat S for the vehicle.

[**0152**] In the present embodiment, the printing is applied to the seam portion sewing the cut piece and the natural leather portion in the master model skin material. Accordingly, the portion of the sewing thread pattern **21** of the seat S for the vehicle forming the product and the portion of the grain pattern are formed in the delustered state.

[**0153**] In this case, the printing may be applied after the master model having the three-dimensional shape is finished, or may be applied to the master model skin material before preparing the master model. In the case that the printing is applied to the comparatively wide range including the grain pattern portion as in the present embodiment, the printing can be more efficiently executed by applying the printing to the flat skin material, and the structure is preferable.

[**0154**] When applying the printing, the master model skin material is first arranged on the printing table. Further, the printing is applied to the seam or the natural leather portion on the basis of the reference position, with respect to the master model skin material arranged on the printing table.

[**0155**] An ink used for printing may employ an ink having a film forming component constituted by a thermoplastic

resin, for example, a vinyl resin, an acrylic resin, a polyester resin or the like, and in particular, in the case of the porous electroforming vacuum forming metal mold, a material having a chemical resistance in an electrolytic bath is selected.

[0156] The printing is executed, for example, by a silk screen printing, however, it is not limited to this, but may employ the other printing mechanisms such as a gravure printing, an offset printing, an offset gravure printing, a relief printing, a flexographic printing or the like, and a transcribing mechanism.

[0157] The master model having the three-dimensional shape is prepared by using the master model skin material to which the printing mentioned above is applied. Further, the forming metal mold **1** is prepared on the basis of the master model. The sewing thread pattern **21** formed by the seam of the master model and the grain pattern formed by the natural leather are reflected to the forming metal mold **1**, and the portion to which the printing is applied is formed in the rougher surface state than the other portions.

[0158] In this case, a porous ceramic mold and a porous resin mold can be additionally used as the forming metal mold **1**.

[0159] It is preferable that the fiber base material layer **12** is not provided in the end portion of the skin material **10** formed by the forming metal mold **1** mentioned above. In accordance with the structure mentioned above, when cutting the end portion of the skin material **10** as shown in **FIG. 19**, in order to arrange the shape of the skin material **10**, the trim portion **10***d* is structured only by the synthetic resin layer **11**.

[0160] In accordance with the structure mentioned above, since the trim portion **10***d* is structured so as not to include the fiber base material layer **12** at a time of cutting the skin material **10**, a reproducing process is easily executed in the case of executing a recycle.

[0161] In this case, it is preferable that a trimming is executed at a time of attaching a needle **30***e* to an edge portion of the forming metal mold **1** and engaging and setting the skin material **10** to the needle **30***e*.

[0162] FIGS. **20** to **23** are explanatory views showing an example of a manufacturing apparatus of the seat for the vehicle.

[0163] As shown in FIGS. **20** to **22**, a manufacturing apparatus **100** of the seat S for the vehicle is provided with the forming metal mold **1**, a skin material holding frame **2** in which the skin material **10** is arranged, a heater **3** corresponding to a heating mechanism of the skin material **10**, and a pressurizing mechanism **4** for pressurizing the constituting members of the seat S for the vehicle.

[0164] The forming metal mold **1** is formed in a predetermined three-dimensional shape in accordance with an evacuation of the skin material **10**, and the constituting members of the seat S for the vehicle are arranged and are assembled in the forming metal mold **1**. A suction hole connected to a vacuum apparatus (not shown) is provided in a surface in which the forming metal mold **1** is arranged.

[0165] A metal mold shown in FIGS. **15** to **19** mentioned above is used as the forming metal mold **1**.

[0166] In this case, the forming metal mold **1** may be structured so as to be tiltable and rotatable around a shaft **5***a* of the receiving table **5**. Accordingly, a working portion can be always placed at a preferable position of a worker at a time of firmly contacting the terminal portion of the skin material **10** to the bottom plate by the staple.

[0167] In the manufacturing apparatus **100**, a standing wall portion **1***b* is provided in an opening peripheral edge portion **1***a* of the forming metal mold **1**. The standing wall portion **1***b* is provided in a standing manner at a predetermined interval in the opening peripheral edge portion **1***a* of the forming metal mold **1**. The standing wall portion **1***b* is structured so as to pinch and hold the skin material **10** with respect to a lower side surface of an upper frame **2***b* in the skin material holding frame **2**.

[0168] The skin material holding frame **2** of the skin material **10** is constituted by the upper frame **2***b* and a lower frame **2***c*. The upper frame **2***b* and the lower frame **2***c* may be formed in a donut shape having a hollow portion which is slightly smaller than the shape of the skin material **10**.

[0169] The lower frame **2***c* is provided with a notch portion which can be firmly contacted with the opening peripheral edge portion **1***a* of the forming metal mold **1** and can be engaged with the standing wall portion **1***b*, while keeping clear of the standing wall portion **1***b* of the forming metal mold **1**. Further, the lower frame **2***c* is formed such that an upper surface of the lower frame **2***c* is approximately equal to or lower than a thickness of an upper surface of the standing wall portion **1***b* at a time of being arranged so as to be closely contacted with the opening peripheral edge portion **1***a* of the forming metal mold **1**.

[0170] In accordance with the structure mentioned above, when arranging the skin material **10** between the upper frame **2***b* and the lower frame **2***c* and arranging the upper frame **2***b* and the lower frame **2***c* so as to move downward to the opening peripheral edge portion **1***a* of the forming metal mold **1**, the skin material **10** is pinched and held between the lower surface of the upper frame **2***b* and the upper surface of the standing wall portion **1***b*.

[0171] Alternatively, in the case that the upper surface of the lower frame **2***c* is approximately flushed with the upper surface of the standing wall portion **1***b*, the skin material **10** is pinched and held between the lower surface of the upper frame **2***b*, and the upper surface of the standing wall portion **1***b* and the upper surface of the lower frame **2***c*. In this case, when the skin material **10** is held, the terminal portion of the skin material **10** may be trimmed and the shape of the skin material **10** may be arranged as occasion demands.

[0172] Further, the structure may be made such that the notch portion engaging with the standing wall portion **1***b* is not provided in the lower frame **2***c*. In this case, the skin material **10** is pinched and fixed between the upper frame **2***b* and the lower frame **2***c*, by fixing the upper frame **2***b* and the lower frame **2***c* to the metal mold by a clamp **8**.

[0173] A particular structure of the clamp **8** is shown in **FIG. 23**. As shown in **FIG. 23**, the clamp **8** may be structured to have a base portion **8***a* arranged in the forming metal mold **1**, a drive apparatus **8***b* constituted by an air cylinder provided in the base portion **8***a*, a link mechanism (not shown) connected to the piston rod of the air cylinder, a shaft portion **8***c* connected to the link mechanism, and a

pressing portion **8***d* provided in the shaft portion **8***c*, and a plurality of clamps **8** are provided in an opening side of a forming metal mold **1**.

[**0174**] The drive apparatus **8***b* of the clamp **8** is connected to a pressure supply source via a conduit pipe **8***e*, is actuated by an air supply, rotates the shaft portion **8***c* via the link mechanism so as to change a direction of the pressing portion **8***d*, and moves the shaft portion **8***c* downward so as to move downward the pressing portion **8***d* and press the pressing portion **8***d* to the opening peripheral edge portion of the forming metal mold **1**.

[**0175**] The skin material holding frame **2** is hung from the frame **7** via the rod **2***a*, and an elevating apparatus **9** constituted by an air cylinder connected to the rod **2***a*. The elevating apparatus **9** is connected to a pressure supply source (an air supply source in the present embodiment), and is actuated by the air supply so as to expand and contract the rod **2***a*, thereby freely elevating the skin material holding frame **2**.

[**0176**] In this case, since the structure is made such that a front side of the skin material holding frame **2** is directed further upward at a time when the skin material holding frame **2** is ascended to the topmost portion so as to be retracted after the heating of the skin material **10** is finished, it is possible to secure a wider working space in a vertical direction. Accordingly, it is preferable that the rod **2***a* is provided, for example, in front and rear and right and left sides, totaling four positions of the skin material holding frame **2**, and the rods **2***a* positioned in the front side are further ascended at a time when the skin material holding frame **2** is ascended to the topmost portion.

[**0177**] The heater **3** is structured so as to heat and soften the skin material **10** before the skin material **10** is evacuated. The skin material **10** becomes soft by heating the skin material **10** by the heater **3**, and it is possible to well execute the forming by the forming metal mold **1**.

[**0178**] The heater **3** is arranged so as to pinch the skin material holding frame **2** from a vertical direction. The heater **3** is structured such that a plurality of heating lamps **3***c* are arranged in a surface-shaped holding body **3***a*, and heat a forming surface of the forming metal mold **1** and the skin material **10** of the skin material holding frame **2** from a vertical direction.

[**0179**] The heater **3** is arranged in a slide frame (not shown), and is structured so as to move within the slide frame by using an air cylinder as a drive source so as to freely move forward to an upper side of the forming metal mold **1** and backward therefrom.

[**0180**] In this case, the slide mechanism moves the heater **3** forward and backward, for example, by sliding a roller arranged in the heater **3** side along a rail in the slide frame side. In this case, it is preferable that a stopper or limiting mechanism is provided in an end portion of the rail so as to stop the movement of the heater **3** at a time when the roller of the heater **3** comes to the position of the stopper.

[**0181**] The pressurizing mechanism **4** is hung from the frame **7** via a rod **4***a*, and an elevating apparatus **9** constituted by an air cylinder connected to the rod **4***a*. The pressurizing mechanism **4** is structured, in the same manner as the skin material holding frame **2** mentioned above, such as to freely elevate on the forming metal, mold **1** on the basis of an operation of the elevating apparatus **9** and pressurize the constituting members of the seat S for the vehicle arranged in the forming metal mold **1**.

[**0182**] In this case, in the present embodiment, the description is given of the skin material holding frame **2**, the heater **3**, the pressurizing mechanism **4** and the clamp **8**, as the structures actuated by the air cylinder. However, the structure is not limited to this, but clearly the other drive mechanisms such as a hydraulic cylinder or the like may be employed.

[**0183**] The vacuum forming of the skin material **10** and the assembly of the seat S for the vehicle are executed by operating the manufacturing apparatus in accordance with a predetermined order. The operation of the manufacturing apparatus may be executed in accordance with an automatic control or a manual control. In the case of the automatic control, a heating condition is monitored by a temperature sensor, or a processing time is measured by a timer, and each of the mechanisms is automatically operated on the basis of information from the sensor or the timer.

[**0184**] Further, in the case that the manufacturing apparatus is operated in accordance with the manual control, a control panel (not shown) is provided near the manufacturing apparatus, and each of the mechanisms is operated by turning on a plurality of switches on the control panel.

[**0185**] The switches are provided in correspondence to the forming metal mold **1**, the skin material holding frame **2**, the heater **3**, the pressuring mechanism **4** and the clamp **8**, and the structure is made such that each of the mechanisms can be operated and stopped by operating the switch. In this case, each of the mechanisms may be controlled from the operation start to the stop by using a timer.

[**0186**] First, the skin material **10** is set to the skin material holding frame **2** in a state in which the skin material holding frame **2** is moved in a downward direction.

[**0187**] Next, as shown in **FIG. 21**, the skin material **10** is heated by the heater **3**.

[**0188**] When the skin material is heated, the skin material holding frame **2** is next moved downward toward the forming metal mold **1**. Further, the skin material forming frame **2** is fixed to the forming metal mold **1** by using the clamp **8** or the like.

[**0189**] Further, the skin material **10** set to the forming metal mold **1** is evacuated.

[**0190**] When the skin material **10** is formed, the cushion material C and the bottom plate B are mounted on the evacuated skin material **10**, as shown in **FIG. 22**. Further, the pressure is applied from the bottom plate B side by way of the pressurizing mechanism **4**.

[**0191**] The clamp **8** is released while the pressure is applied by the pressurizing mechanism **4**, and the skin material **10** is released from the skin material holding frame **2**. Further, the terminal end portion of the skin material **10** is fixed to the bottom plate B by the staple or the like. At this time, if the forming metal mold **1** is structured such as to be tiltable and rotatable around the shaft **5***a*, the terminal treatment work can be easily executed and it is possible to improve the working efficiency. The pressuring mechanism

4 pressurizing the cushion material C and the bottom plate B is moved upward at the end.

[**0192**] In the manufacturing apparatus **100** in accordance with the present embodiment, since the terminal treatment of the skin material **10** is executed while pressurizing by way of the pressurizing mechanism **4**, it is possible to attach the skin material **10** to the bottom plate B with a suitable tension, and it is possible to obtain the seat S for the vehicle having an improved outer appearance.

[**0193**] In this case, in the embodiment mentioned above, there is shown the structure in which the cushion material C and the bottom plate B are mounted and assembled after forming the skin material **10**. However, the structure may be made such that skin material **10** and the cushion material C are integrally expansion formed by a raw material forming the cushion material C, a foaming agent and the like at the same time of forming the skin material **10** by the forming metal mold **1**.

[**0194**] **FIG. 24** shows an embodiment in which the skin material **10** and the cushion material C are integrally expansion formed by the raw material forming the cushion material, the foaming agent and the like at the same time of forming the skin material **10** by the forming metal mold **1**.

[**0195**] **FIG. 25** shows another embodiment of the seat S for the vehicle in accordance with the integral expansion forming. In the embodiment shown in **FIG. 25**, a main cushion C**1** and a sub cushion C**2** are used as the cushion material C. The sub cushion C**2** is formed so as to be arranged in one side skin material side on the boundary of the sewing thread pattern **21**. In this case, the sub cushion C**2** is first bonded to the main cushion C**1** by an adhesive agent or the like, and the skin material **10** is bonded by the adhesive agent.

[**0196**] When using the sub cushion C**2** as mentioned above, it is possible to express an irregular feeling in one side on the boundary of the sewing thread pattern **21**, and it is possible to highlight the condition similar to the sewing more clearly. Further, in the case of the embodiment shown in **FIG. 25**, it is possible to form the skin material **10** by the forming metal mold **1**, adhere the sub cushion C**2** to the skin material **10**, and thereafter integrally expansion form the skin material **10**, the sub cushion C**2** and the main cushion C**1** by the raw material forming the main cushion C**1**, the foaming agent and the like.

[**0197**] Further in accordance with this embodiment, the skin material **10** may be previously formed by the forming metal mold **1**, and the sub cushion C**2** is laminated on the skin material **10**. Thereafter, the main cushion C**1** can be integrally bonded by the adhesive agent, or an integral expansion forming can be applied to the skin material **10** laminated by the sub cushion C**2**, by the material forming the main cushion C**1**, or the like.

[**0198**] FIGS. **26** to **29** show a manufacturing apparatus further having the other structures.

[**0199**] A manufacturing apparatus shown in **FIG. 26** is provided with a heater **18** for heating at least a part of a back surface side of the bottom plate B, a skin material interfolding mechanism **6** for interfolding a terminal portion **11***a* of the skin material **10** to the back surface side of the bottom plate B, and a crimper for crimping the back surface side of the bottom plate B and the terminal portion **11***a* of the skin material **10**, in addition to the structures mentioned above.

[**0200**] The standing wall portion **1***b* is provided in the opening peripheral edge portion **1***a* of the forming metal mold **1**. The standing wall portion **1***b* relates to the interfolding process of the skin material **10** together with the skin material interfolding mechanism **6**, and is provided in a standing manner in the opening peripheral edge portion **1***a* of the forming metal mold **1**. The structure is made such that a portion forming a return margin at a time of returning and firmly contacting the terminal portion of the skin material **10** to the bottom plate B is positioned in the standing wall portion **1***b*. Accordingly, a desired return margin can be secured by adjusting a height of the standing wall portion **1***b*.

[**0201**] Further, a notch portion **1***c* for arranging the skin material interfolding mechanism **6** mentioned below is provided at a predetermined interval in the standing wall portion **1***b*. The notch portion **1***c* is formed so as to freely arrange an extending portion **6***b* of the skin material interfolding mechanism **6**. The notch portion **1***c* is formed, for example, by notching the standing wall portion **1***b* at a predetermined width by a predetermined interval.

[**0202**] Accordingly, it is preferable that the standing wall portion **1***b* is formed by a raw material which can easily form the notch portion **1***c* or the like. The raw material of the standing wall portion **1***b* may use, for example, a resin or a wood.

[**0203**] The skin material holding frame **2** is structured so as to seal the skin material **10** all around the periphery of the forming metal mold **1**, and is moved in a vertical direction in the upper side of the forming metal mold **1**. The skin material holding frame **2** is formed in approximately the same shape as a shape of the opening peripheral edge portion **1***a* of the forming metal mold **1**, that is, the upper surface of the standing wall portion **1***b* in the present embodiment, and is pressed to the opening peripheral edge portion **1***a* of the forming metal mold **1**. The skin material holding frame **2** is closely contacted with the opening peripheral edge portion **1***a* of the forming metal mold **1**, and is structured so as to pinch and fix the skin material **10** with respect to the opening peripheral edge portion **1***a* of the forming metal mold **1**.

[**0204**] As the heater **18** of the bottom plate B, in accordance with the present embodiment, there is employed a heating body having a frame shape conforming with the peripheral edge shape of the bottom plate B. The heater **18** is hung from the frame **7** via a rod **18***a*, and an elevating apparatus **9** constituted by an air cylinder connected to the rod **18***a*.

[**0205**] The heater **18** is structured so as to freely elevate on the forming metal mold **1** on the basis of an operation of the elevating apparatus **9** in the same manner as the skin material holding frame **2** and the pressurizing mechanism **4** mentioned above, move downward until the heater **18** is brought into contact with the back surface side of the bottom plate B arranged in the forming metal mold **1** and heat a predetermined position on the back surface of the bottom plate B.

[**0206**] A description will be given here of a particular structure of the heater **18** of the bottom plate. As the heater **18**, an electric heating deposition device, a hot air deposition

device and a hot wire are used. In the present embodiment, the electric heating deposition device is used as the heater **18**.

[**0207**] The electric heating deposition device serving as the heater **18** is structured so as to be provided with a heating portion **18***b* having a heater built-in, as shown in **FIG. 28**. The heating portion **18***b* is made of a metal having a high thermal conductivity, and is formed, for example, of aluminum. Further, the structure is made such that the heater incorporated in the heating portion **18***b* generates heat, thereby heating an object brought into contact with the heating portion **18***b*.

[**0208**] In this case, a molten material of a non-heated material is attached to the heating portion **18***b* by arranging a non-deposited film such as a fluorine contained resin or the like in the heating portion **18***b*, and this structure is preferable. Further, even in the case that the molten material is attached, it is possible to easily remove the molten material.

[**0209**] In this case, the heater **18** may be formed in a shape obtained by separating the frame shape, in addition to the frame shape conforming with the peripheral edge shape of the bottom plate B as mentioned above. When the heater **18** is formed in the separated shape as mentioned above, the shape of each of the heater **18** may be formed variously. The shape of each of the heater **18** is formed, for example, in a rectangular cross sectional shape, a circular cross sectional shape, an oval cross sectional shape, a polygonal cross sectional shape and the like.

[**0210**] Since the structure is made as mentioned above, the heating can be executed all around the periphery of the peripheral edge end portion of the bottom plate B without any time difference by the heater **18**. Since the heating is executed all around the periphery of the peripheral edge end portion of the bottom plate B without any time difference, it is possible to make the state of the molten resin uniform, and it is possible to uniformly infiltrate the molten resin into the fiber base material layer **12** of the skin material **10** in a later step.

[**0211**] In addition to the structure mentioned above, the structure may be made such that a plurality of electric heating deposition devices are arranged in conformity to the shape of the peripheral edge end portion of the bottom plate B. In this case, a plurality of electric heating deposition devices move toward the bottom plate B without any time difference, and execute a control such that the heating operation can be executed.

[**0212**] The hot air type deposition device is conventionally known, and is structured so as to be provided with a hot air injecting nozzle, and a hot air source connected to the nozzle via a duct. When the hot air type deposition device is operated, the hot air delivered from the hot air source is injected from the nozzle through the duct. Further, the hot air injected from the nozzle is applied to a predetermined position of the bottom plate B, and the heating is executed.

[**0213**] In the case of using the hot air type deposition device, it is preferable that the heating can be executed all around the periphery of the peripheral edge end portion of the bottom plate B without any time difference in the same manner as the case of using the electric heating deposition device.

[**0214**] Accordingly, for example, a plurality of hot air injecting nozzles are arranged in the frame body having the same shape as the peripheral edge end portion of the bottom plate B, and the control is executed such that the hot air is approximately simultaneously injected from the hot air injecting nozzles.

[**0215**] Alternatively, the hot wire may be used as the heat generating body. The hot wire is arranged along the peripheral edge end portion of the bottom plate B. Further, it is possible to approximately simultaneously heat all the periphery of the peripheral edge end portion of the bottom plate B by energizing the hot wire.

[**0216**] In this case, with respect to the hot wire, it is preferable that the coating film of the fluorine contained resin or the like is applied thereto in the same manner as the heating portion **18***b* of the electric heating deposition device. Accordingly, the molten resin or the like of the bottom plate B is hard to be attached, and even if the molten resin or the like is attached, the molten resin can be easily removed, so that the structure is preferable.

[**0217**] As mentioned above, the resin melting portion is formed in the bottom plate B by heating the bottom plate B by way of the heater **18**. The resin melting portion is provided along the peripheral edge end portion of the bottom plate B.

[**0218**] The resin melting portion may be provided at a plurality of positions by a predetermined interval along the peripheral edge end portion of the bottom plate B, or may be continuously provided in a band shape without any predetermined interval. Further, the structure may be made such that the band-like resin melting portion is provided in two rows or two or more rows.

[**0219**] In this case, the place in which the resin melting portion is formed is not limited to the peripheral edge end portion of the bottom plate B, but may be set to the back side surface of the seat surface portion of the bottom plate B. In this case, the resin melting portion may be provided in both of the peripheral edge end portion of the bottom plate B and the back side surface of the seat surface portion. Accordingly, the terminal portion of the skin material **10** can be bonded to both of the peripheral edge end portion of the bottom plate B and the back side surface of the seat surface portion, and it is possible to obtain a high bonding property.

[**0220**] At this time, the skin material **10** can be bonded to a boundary portion between the peripheral edge end portion and the back side surface of the seat surface portion by continuously forming the resin melting portion of the peripheral edge end portion side and the resin melting portion of the back side surface side of the seat surface portion, and it is possible to bond the skin material **10** and the bottom plate B with a high closely contacting property.

[**0221**] The heater **18** is moved downward so as to be brought into contact with the bottom plate B as shown in **FIG. 28** while applying the pressure by the pressurizing mechanism **4**, and the resin in the peripheral edge end portion in the back surface side of the bottom plate B is molten. The heating is executed until the front surface of the bottom plate B reaches a temperature between 200 and 210° C.

[**0222**] When the bottom plate B is heated, whereby the resin melting portion is provided, the heater **18** is drawn

upward. Further, the skin material interfolding mechanism **6** is operated, and the terminal portion of the skin material **10** is interfolded into the bottom plate B side and is attached to the heated portion of the bottom plate B.

[**0223**] The skin material interfolding mechanism **6** in accordance with the present embodiment is provided at a plurality of positions by a predetermined interval in the forming metal mold **1**. The skin material interfolding mechanism **6** is structured so as to be provided with a base portion **6***a* fixed to the forming metal mold **1**, and an extending portion **6***b* extending from the base portion **6***a*.

[**0224**] In other words, the terminal portion of the skin material **10** becomes in a state of extending along the standing wall portion **1***b*, in a stage that the heating of the bottom plate B is finished. When the terminal portion of the skin material **10** is in the state of extending along the standing wall portion **1***b* as mentioned above, the extending portion **6***b* of the skin material interfolding mechanism **6** passes through the notch portion **1***c* of the standing wall portion **1***b* on the basis of a power of the air cylinder, and moves to the forming metal mold **1** side.

[**0225**] Accordingly, the terminal portion of the skin material **10** is pressed to the forming metal mold **1** side, and the terminal portion is returned as shown in **FIG. 29**. In this case, at this time, the pressure is continuously applied to the cushion material C and the bottom plate B by the pressing mechanism **4**.

[**0226**] When the terminal portion of the skin material **10** is returned by the skin material interfolding mechanism **6**, and is arranged so as to lap over the resin melting portion, the pressure application to the terminal portion of the skin material **10** is next executed. In the present embodiment, the pressurizing is executed by again moving downward the heater **18** having a sufficiently lowered temperature toward the bottom plate B.

[**0227**] The fiber base material layer **12** of the skin material **10** is crimped to the resin melting portion by the pressure application. A fabric material structuring the fiber base material layer **12** of the skin material **10** is constituted by a knitted fabric or a wooly finished product, and is structured such as to have a space between the fibers. The fiber base material layer **12** is crimped to the resin melting portion, whereby the molten resin obtained by the melting of the peripheral edge portion of the bottom plate B is infiltrated.

[**0228**] At this time, the heater **18** having the sufficiently lowered temperature is brought into contact with the terminal portion **11***a* of the skin material **10**, whereby the terminal portion **11***a* of the skin material **10** is cooled, and the molten resin infiltrated into the fiber base material layer **12** of the skin material **10** is solidified.

[**0229**] As mentioned above, the molten resin infiltrated into the fiber base material layer **12** of the skin material **10** is solidified, and the fiber base material layer **12** and the bottom plate B are infiltrated into the fiber base material layer **12**, and are integrally formed via the solidified resin. In the manner mentioned above, the terminal portion of the skin material **10** is fixed to the peripheral edge end portion of the bottom plate B.

[**0230**] The pressurizing mechanism **4** pressurizing the cushion material C and the bottom plate B is moved upward at the end. As mentioned above, in the manufacturing apparatus S in accordance with the present embodiment, since the terminal treatment of the skin material **10** is executed while pressurizing by the pressurizing mechanism **4**, it is possible to attach the skin material **10** to the bottom plate B with a suitable tension, and it is possible to obtain the seat for the vehicle having the improved outer appearance.

[**0231**] As mentioned above, in accordance with the present invention, since the predetermined shape having the outer appearance equal to the joint portion obtained by actually bonding in accordance with the sewing or the welding process, the sewing thread and the like is formed in the one-piece skin material in accordance with the transcription, whereby there is formed the outer appearance equal to the three-dimensional outer appearance obtained by actually bonding a plurality of skin materials in accordance with the sewing or the welding process, the outer appearance shape is not deformed even in the case that the seat is manufactured by coating the cushion material. It is possible to obtain the skin material for the vehicle and the seat for the vehicle, which are provided with the outer appearance equal to the seat covered with the skin material assembly actually manufactured in accordance with the sewing or the like, and have the high-class feeling. Further, since the skin material is constituted by one piece, the rain water does not make an intrusion into the seat even in the case that the skin material is used in the seat for the outdoor vehicle, and the structure is preferable.

[**0232**] Further, since the foam material is laminated on the back surface of the skin material, and the seat surface concavo-convex shape is simultaneously formed, it is possible to form the outer appearance in which the convex portion on the front surface is full, and it is possible to reproduce the three-dimensional outer appearance by highlighting the concavo-convex shape of the front surface more clearly.

[**0233**] Further, since the sewing pattern is applied in accordance with the transcription, it is possible to inexpensively obtain the skin material having the high-class feeling. Further, since the transcription is employed, it is possible to appropriately change the sewing pattern and the grain pattern, and it is possible to correspond to the various designs.

[**0234**] Since the forming metal mold used in the manufacturing apparatus in accordance with various embodiments of the present invention is structured so as to be provided with the metal spray layer, and the metal spray layer is formed by spraying the metal to the master model surface, it is possible to reproduce the minute concavo-convex shape of the master model surface in the metal mold surface. Accordingly, it is possible to transcribe the same minute concave-convex shape to the front surface of the skin material formed by using the metal mold.

[**0235**] For the purposes of promoting an understanding of the principles of the invention, reference has been made to the preferred embodiments illustrated in the drawings, and specific language has been used to describe these embodiments. However, no limitation of the scope of the invention is intended by this specific language, and the invention should be construed to encompass all embodiments that would normally occur to one of ordinary skill in the art.

[**0236**] The present invention may be described in terms of functional block components and various processing steps.

Such functional blocks may be realized by any number of components configured to perform the specified functions. Furthermore, the present invention could employ any number of conventional techniques for configuration, processing and/or control.

[**0237**] The particular implementations shown and described herein are illustrative examples of the invention and are not intended to otherwise limit the scope of the invention in any way. For the sake of brevity, conventional systems, and other functional aspects of the systems (and components of the individual operating components of the systems) may not be described in detail. Furthermore, the connecting lines, or connectors shown in the various figures presented are intended to represent exemplary functional relationships and/or physical or logical couplings between the various elements. It should be noted that many alternative or additional functional relationships, physical connections or logical connections may be present in a practical device. Moreover, no item or component is essential to the practice of the invention unless the element is specifically described as "essential" or "critical". Numerous modifications and adaptations will be readily apparent to those skilled in this art without departing from the spirit and scope of the present invention.

1-15. (canceled)

16. A skin material for a vehicle, comprising:

a general surface and a predetermined shape having an outer appearance which is equivalent to a joint portion obtained by an actual bonding of a plurality of skin materials that is constructed as a one-piece skin material in accordance with a transcription, the skin material comprising an outer appearance which is equivalent to a three-dimensional outer appearance obtained by actually bonding a plurality of skin materials in a three-dimensional form by one skin material.

17. The skin material for a vehicle as claimed in claim 16, wherein the skin material comprises a form material arranged in portions other than the joint portion in a back surface of the skin material and forming a seat surface having a concavo-convex shape.

18. The skin material for a vehicle as claimed in claim 16, wherein the joint portion having the outer appearance equal to the outer appearance obtained by actually bonding the plurality of skin materials is constituted by any one of a joint in accordance with a sewing, a joint in accordance with a welding process and an ornamental stitch portion provided in the skin material surface.

19. The skin material for a vehicle as claimed in claim 16, wherein the joint portion is formed in a shape protruding from the general surface.

20. The skin material for a vehicle as claimed in claim 16, wherein the skin material is structured such that all or a part of a joint portion shape of a plurality of skin materials, an undercut shape of the joint portion, a shape of a sewing thread, an undercut shape of the sewing thread, a shape of a seam hole, a concavo-convex shape obtained by overlapping the skin materials in the joint portion, and a shape showing a biting state of the sewing thread into the skin material are transcribed.

21. The skin material for a vehicle as claimed in claim 16, wherein the outer appearances equivalent to the three-dimensional outer appearances are provided on the boundary of the joint portion.

22. The skin material for a vehicle as claimed in claim 17, wherein the back surface material is arranged in the form material and the form material is pinched by the back surface material and the skin material.

23. The skin material for a vehicle as claimed in claim 18, wherein the ornamental stitch portion is constituted by a pattern portion.

24. A seat for a vehicle, comprising a skin material covering, the skin material covering comprising:

a general surface and a predetermined shape having an outer appearance which is equal to a joint portion obtained by an actual bonding of a plurality of skin materials that is constructed as a one-piece skin material in accordance with a transcription, the skin material comprising an outer appearance which is equivalent to a three-dimensional outer appearance obtained by actually bonding a plurality of skin materials in a three-dimensional form by one skin material.

25. A manufacturing apparatus for a seat for a vehicle covered with a skin material, the manufacturing apparatus comprising:

a forming metal mold for forming the skin material, the forming metal mold comprising a porous metal spray layer forming a cavity surface, and a porous backup layer holding the metal spray layer.

26. The manufacturing apparatus of a seat for a vehicle as claimed in claim 25, wherein a thickness of the metal spray layer is equal to or more than 0.7 mm and equal to or less than 1.0 mm.

27. The manufacturing apparatus of a seat for a vehicle as claimed in claim 25, wherein the forming metal mold is constituted by a vacuum mold.

28. The manufacturing apparatus of a seat for a vehicle as claim 25, wherein the backup layer is constituted by a first layer and a second layer, a thickness of the first layer is equal to or more than 7.0 mm and equal to or less than 10.0 mm, and a thickness of the second layer is equal to or more than 50.0 mm and equal to or less than 70.0 mm.

29. The manufacturing apparatus of a seat for a vehicle as claimed in claim 28, wherein the first layer is formed by a metal powder, and a diameter of a hole formed therebetween is equal to or more than 1.5 mm and equal to or less than 2.0 mm.

30. The manufacturing apparatus of a seat for a vehicle as claimed in claim 28, wherein the second layer is formed by a metal powder, and a diameter of a hole formed therebetween is equal to or more than 3.0 mm and equal to or less than 5.0 mm.

* * * * *