PCT WORLD INTELLECTUAL PROPERTY ORGANIZATION
International Bureau

INTERNATIONAL APPLICATION PUBLISHED UNDER THE PATENT COOPERATION TREATY (PCT)

(51) International Patent Classification 5 : C07C 5/42, 5/327, B01J 20/34, 35/12, 38/04 — A1

(11) International Publication Number: **WO 95/01947**

(43) International Publication Date: 19 January 1995 (19.01.95)

(21) International Application Number: PCT/US94/07474

(22) International Filing Date: 30 June 1994 (30.06.94)

(30) Priority Data:
08/088,306 7 July 1993 (07.07.93) US

(71) Applicant *(for all designated States except US)*: RAYTHEON ENGINEERS & CONSTRUCTORS, INC. [US/US]; 141 Spring Street, Lexington, MA 02173 (US).

(72) Inventors; and

(75) Inventors/Applicants *(for US only)*: CHEN, Shiou-Shan [US/US]; 42 Wainwright Road, Winchester, MA 01890 (US). HWANG, Shyh-Yuan [CN/US]; 29 Henry Street, Cambridge, MA 02139 (US). OLEKSY, Slawomir, A. [US/US]; 81 Baldwin Road, Billerica, MA 01821 (US). RAM, Sanjeev [US/US]; 6 Accord Lane, Hingham, MA 02043 (US).

(74) Agents: SILVERSTEIN, David et al.; Lappin & Kusmer, Two Hundred State Street, Boston, MA 02109 (US).

(81) Designated States: AT, AU, BB, BG, BR, BY, CA, CH, CN, CZ, DE, DK, ES, FI, GB, HU, JP, KE, KP, KR, KZ, LK, LU, MG, MN, MW, NL, NO, NZ, PL, PT, RO, RU, SD, SE, SK, TT, UA, US, VN, European patent (AT, BE, CH, DE, DK, ES, FR, GB, GR, IE, IT, LU, MC, NL, PT, SE), OAPI patent (BF, BJ, CF, CG, CI, CM, GA, GN, ML, MR, NE, SN, TD, TG).

Published
With international search report.

(54) Title: REGENERATION AND STABILIZATION OF DEHYDROGENATION CATALYST

(57) Abstract

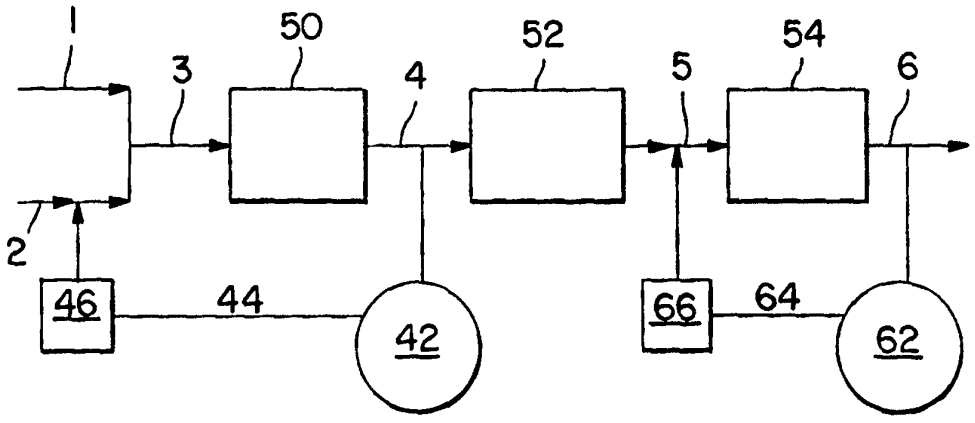

A method and associated apparatus for regenerating and/or stabilizing catalyst used in dehydrogenation of alkylaromatic hydrocarbons is disclosed. The alkylaromatic hydrocarbon (1) and steam (2) are combined to form feedstream (3) and pass into reactor (50). The ensuing product stream (4) is reheated in heater (52) to restore the heat lost and passed as partially converted reactant stream (5) into second reactor (54) and leaves as stream (6) comprising the dehydrogenation product. Restoration and/or stabilization of catalyst is accomplished by an alkali metal compound which is fed into feedstream (2) and/or product stream (5) via supply means (46 and 66), respectively. The amount of alkali metal compound entering the reactor(s) is monitored by means (42 and 62) which may in turn be coupled to activating means (44 and 64) to signal and activate the supply means. This method and apparatus permit the restoration and/or stabilization of the catalyst to be performed without interrupting the dehydrogenation reaction.

FOR THE PURPOSES OF INFORMATION ONLY

Codes used to identify States party to the PCT on the front pages of pamphlets publishing international applications under the PCT.

AT	Austria	**GB**	United Kingdom	**MR**	Mauritania
AU	Australia	**GE**	Georgia	**MW**	Malawi
BB	Barbados	**GN**	Guinea	**NE**	Niger
BE	Belgium	**GR**	Greece	**NL**	Netherlands
BF	Burkina Faso	**HU**	Hungary	**NO**	Norway
BG	Bulgaria	**IE**	Ireland	**NZ**	New Zealand
BJ	Benin	**IT**	Italy	**PL**	Poland
BR	Brazil	**JP**	Japan	**PT**	Portugal
BY	Belarus	**KE**	Kenya	**RO**	Romania
CA	Canada	**KG**	Kyrgystan	**RU**	Russian Federation
CF	Central African Republic	**KP**	Democratic People's Republic of Korea	**SD**	Sudan
CG	Congo			**SE**	Sweden
CH	Switzerland	**KR**	Republic of Korea	**SI**	Slovenia
CI	Côte d'Ivoire	**KZ**	Kazakhstan	**SK**	Slovakia
CM	Cameroon	**LI**	Liechtenstein	**SN**	Senegal
CN	China	**LK**	Sri Lanka	**TD**	Chad
CS	Czechoslovakia	**LU**	Luxembourg	**TG**	Togo
CZ	Czech Republic	**LV**	Latvia	**TJ**	Tajikistan
DE	Germany	**MC**	Monaco	**TT**	Trinidad and Tobago
DK	Denmark	**MD**	Republic of Moldova	**UA**	Ukraine
ES	Spain	**MG**	Madagascar	**US**	United States of America
FI	Finland	**ML**	Mali	**UZ**	Uzbekistan
FR	France	**MN**	Mongolia	**VN**	Viet Nam
GA	Gabon				

REGENERATION AND STABILIZATION OF DEHYDROGENATION CATALYST

The present invention relates generally to a method and associated apparatus for greatly extending the useful life of a catalyst bed used in the catalytic dehydrogenation of alkylaromatic hydrocarbons while maintaining a very high level of conversion and a very high level of selectivity and without the need to interrupt the conversion process.

BACKGROUND OF THE INVENTION

It is known in the art that an alkylaromatic hydrocarbon can be catalytically dehydrogenated to form an alkenylaromatic hydrocarbon, such as in the conversion of ethylbenzene to styrene. The prior art teaches a variety of different dehydrogenation catalysts and process parameters, each having different advantages and disadvantages. In general, the prior art teaches that certain tradeoffs ordinarily must be made between level of conversion and level of selectivity, between level of conversion and catalyst life, and so forth. For example, the disadvantage of obtaining a higher degree of dehydrogenation of the alkylaromatic in some processes may be a lower level of selectivity, i.e., a higher percentage of undesired dehydrogenation byproducts. Obviously, it is most advantageous and cost-effective to obtain both high levels of conversion and high levels of selectivity, if possible.

Catalyst life, and the related cost factors, is another important process parameter in these dehydrogenation reactions. First are the costs related to the catalyst itself. Although the unit cost of the catalyst may not be great, because of the large amounts of catalyst required as well as the cost of disposing of used, contaminated catalyst in an environmentally acceptable way, the life of the catalyst and the ability to regenerate used catalyst are critical elements in a commercial dehydrogenation process. Second are the costs related to shutting

down a large, perhaps multistage, dehydrogenation reactor, operating at temperatures on the order of 600°C, in order to either replace or regenerate the catalyst bed. In addition to the obvious labor costs, there are also the capital costs of having expensive equipment off-line for any length of time. Heat losses add still further costs to this catalyst replacement or regeneration step. Of even greater significance is the cost of lost production during the shutdown period.

Thus, on the one hand, it is preferred to maximize catalyst life. But, on the other hand, normal catalyst degeneration during use tends to reduce the level of conversion, the level of selectivity, or both, resulting in an undesirable loss of process efficiency. Various possible explanations for the typical degeneration of dehydrogenation catalysts during use are found in the literature. These include carbonization of catalyst surfaces, physical breakdown of the interstitial structures of the catalysts, loss of catalization promoters, and others. Depending on the catalyst and the various process parameters, one or more of these mechanisms, or other mechanisms not yet identified, may be at work.

Although the prior art teaches various methods for regenerating used catalyst in order to restore temporarily and only partially the catalyst's effectiveness, these methods generally involve stopping the dehydrogenation, shutting down the dehydrogenation reactor or, in some cases, removing the catalyst for external regeneration. Furthermore, the process impact of such periodic catalyst regeneration is an undesirable saw-tooth pattern of output: levels of conversion and selectivity start out relatively high but slowly and continuously deteriorate until the point where the catalyst is regenerated to restore a relatively high level of conversion and selectivity. But, immediately thereafter, catalyst effectiveness begins again to deteriorate. As a result, it is not possible utilizing conventional catalyst regeneration methods to achieve substantially steady-state process conditions at high levels of conversion and selectivity.

For example, German Patentschrift Nos. DD 298 353, DD 298 354, DD 298 355,

DD 298 356, and DD 298 357 teach a 3-step process for regenerating the catalyst bed in an ethylbenzene-to-styrene dehydrogenation comprising: (1) shutting down the reaction and substituting a steam feed for the mixed steam-ethylbenzene feedstream; (2) followed by a heat treatment step; and (3) followed by introducing potassium ions in a steam feed (for example by vaporizing KOH or K_2CO_3). None of these patents, however, teach or suggest in situ catalyst regeneration without process interruption. The process of these German patents would be costly, cumbersome, and result in the kind of undesirable saw-tooth pattern mentioned above.

Thus the prior art fails to disclose any method for either regenerating or stabilizing catalyst activity in order to maintain substantially steady-state dehydrogenation conditions, over extended periods of time and at very high levels of conversion and selectivity without process interruption. These and other problems with and limitations of the prior art are overcome with the catalyst regenerating and/or stabilizing method and apparatus of this invention.

OBJECTS OF THE INVENTION

Accordingly, it is a principal object of this invention to provide a method of and apparatus for regenerating and/or stabilizing a dehydrogenation catalyst.

It is also an object of this invention to provide a method of and apparatus for regenerating a dehydrogenation catalyst in situ.

Another, more specific object of this invention is to provide a method of and apparatus for continuously or intermittently regenerating a dehydrogenation catalyst without process interruption and so as to maintain substantially steady-state reaction conditions at high levels of conversion and selectivity over extended time periods.

Still a further object of this invention is to provide an improved method for dehydrogenating ethylbenzene to styrene in the presence of a catalyst containing iron and one

or more alkali metal compounds.

Specifically, it is an object of this invention to provide a method of and associated apparatus for regenerating and/or stabilizing a dehydrogenation catalyst containing iron and one or more alkali metal compounds by continually (i.e. continuously or intermittently) adding to the reactant feedstream an alkali metal compound.

Other objects of the invention will in part be obvious and will in part appear hereinafter. The invention accordingly comprises the methods, processes, and apparatus involving the several steps and the relation and order of one or more of such steps with respect to each of the others and to the apparatus exemplified in the following detailed disclosure, and the scope of the application of which will be indicated in the claims.

SUMMARY OF THE INVENTION

The dehydrogenation catalyst regeneration and/or stabilization method of this invention comprises the steps of continually, that is either continuously or intermittently, adding to a reactant feedstream an effective amount of an alkali metal compound during continuation of the dehydrogenation process. The method of this invention may also include the step of gradually increasing the reaction zone temperature. The method of this invention can be utilized, for example in the catalytic dehydrogenation of ethylbenzene to styrene, to achieve substantially steady-state reaction conditions at high levels of conversion and selectivity.

BRIEF DESCRIPTION OF THE DRAWING

Fig. 1 is a schematic representation of one embodiment of the method and apparatus of this invention.

Fig. 2 illustrates a preferred method and associated apparatus for carrying out the alkali metal compound addition step of this invention.

Fig. 3 illustrates an alternative method and associated apparatus for carrying out the alkali metal compound addition step of this invention.

DETAILED DESCRIPTION OF PREFERRED EMBODIMENTS

The method of this invention broadly comprises regenerating and/or stabilizing the activity of a dehydrogenation catalyst used in the catalytic dehydrogenation of an alkylaromatic hydrocarbon to obtain a specific desired alkenylaromatic hydrocarbon. Such dehydrogenation catalysts are well known in the art and are commercially available. In general, such catalytic dehydrogenation processes are carried out at temperatures ranging from about 400°C to about 700°C, and preferably between about 500°C to 700°C, by contacting a preheated feedstream, containing a mixture of the alkylaromatic hydrocarbon and steam, with a particular dehydrogenation catalyst. The process can be carried out in single or multistage reactors having fixed catalyst beds or in fluidized beds. The choice of starting alkylaromatic hydrocarbon, dehydrogenation catalyst, reaction temperature and proportion of alkylaromatic hydrocarbon to steam in the feedstream will affect, in part, the resulting alkenylaromatic hydrocarbon as well as the efficiency and selectivity of the conversion process.

In particular, using the aforementioned process, ethylbenzene is converted to styrene by contact with a dehydrogenation catalyst containing iron and at least one alkali metal compound. For example, the ethylbenzene-to-styrene conversion can be advantageously carried out at reaction temperatures ranging from about 500°C to about 700°C, preferably from about 550°C to about 650°C, and at reaction pressures ranging from about 3 to about 20 psia, preferably from about 5 to about 9 psia. The steam-to-hydrocarbon ratio in the

reactant feedstream may range from a ratio of about 0.6:1 to about 3:1 steam to ethylbenzene by weight, preferably a ratio of about 1.0:1 to about 2.0:1 steam to ethylbenzene by weight. The space velocity may range from about 0.2 to about 1.2 kilograms of ethylbenzene per hour per kilogram of catalyst.

Beginning the ethylbenzene-to-styrene conversion process with fresh catalyst, following start-up there is typically an initial conditioning period lasting from about 3-45 days characterized by high initial activity followed by rapid deactivation. For example, during the initial conditioning period, the overall level of conversion of ethylbenzene to styrene might drop off to below about 55 mole % and the level of styrene selectivity might fall to below about 93 mole %. Thereafter in conventional ethylbenzene-to-styrene dehydrogenation processes, the level of catalyst activity continues to fall albeit at slower rates than during the initial conditioning period. In a multi-stage reactor, the level of conversion of ethylbenzene to styrene in each stage might drop by about one-third, for example, from about 30-36 mole % to about 20-24 mole %, during the initial conditioning period, and then continue to drop at a slower rate thereafter. The end of the initial conditioning period in this process generally can be identified by those skilled in the art as the point at which the slope of the line plotting conversion level over time flattens out. As noted previously, the prior art has suggested a number of possible explanations for the gradual deterioration of catalyst activity, but no single mechanism seems to fully account for this phenomenon.

Whatever the explanation, the continued process deterioration beyond the initial conditioning period leads to a number of problems and disadvantages. First, the efficiency of the conversion process is reduced. Unreacted ethylbenzene must be separated from the other components of the output stream for recycling. Styrene must similarly be separated from the unreacted ethylbenzene as well as from other reaction products. Second, instead of a relatively uniform output stream having relatively constant ratios of styrene,

ethylbenzene and miscellaneous by-products, process deterioration leads to an output stream of ever-changing composition. Third, at some point, the level of conversion or the level of styrene selectivity or both fall sufficiently low that the process is no longer economically viable. At this point, the process would have to be shut down and the catalyst either replaced or regenerated by conventional means.

One technique for maintaining the conversion level of ethylbenzene to styrene is to raise the reaction temperature. This can be accomplished, for example, by increasing the temperature of the reactant stream or by adding heat to the reactor chamber. The reaction temperature can be increased slowly and substantially continuously or it can be increased periodically in increments. The impact of such reaction temperature increases is to increase the rate of reaction in order to offset the continuing deterioration of catalyst activity. But, there are relatively narrow limits to the utility of this temperature-raising technique. In particular, above a certain temperature, the mechanical temperature limit of the catalyst or the equipment is approached. Beyond this point, further temperature increases lead to degradation of the catalyst's physical structure and degradation of equipment integrity. As the aforedescribed limit is approached, therefore, the process would have to be shut down and the catalyst either replaced or regenerated by conventional means. Although this temperature-raising technique extends catalyst life somewhat and can be utilized (for example, through continuous or small, frequent reaction temperature increases) to maintain relatively constant conversion of ethylbenzene for a limited period of time, by itself it is of limited utility for the reasons stated.

By contrast, the method of this invention is capable of restoring and/or stabilizing the activity of the catalyst and consequently extending the life of the catalyst far beyond what can be achieved with conventional processes. More particularly, the method of this invention is capable of restoring the activity of the dehydrogenation catalyst to substantially the same high levels of conversion and selectivity as those established at the end of the initial

conditioning period. The method of this invention is also capable of stabilizing the activity of the catalyst at those same high levels of conversion and selectivity for extended periods of time beyond those achievable with conventional processes. The method of this invention may also be utilized in tandem with the aforedescribed temperature-raising technique for additional benefits of further increasing the catalyst life or increasing the ethylbenzene conversion. The method of this invention broadly comprises the steps of continuously or intermittently adding to a reactant feedstream of an alkylaromatic hydrocarbon an effective amount of an alkali metal compound sufficient to regenerate, stabilize, or enhance the activity of the dehydrogenation catalyst and thereby to restore and to maintain high levels of conversion and selectivity. The term "maintain" as used herein is intended to be construed to mean "to keep in a state of repair, efficiency or validity; to preserve from failure or decline over a protracted period of time, e.g. for many months or years." The method is of particular utility in connection with regenerating and/or stabilizing a dehydrogenation catalyst containing iron and at least one alkali metal compound. Such dehydrogenation catalysts are well known in the art and some of those that are available commercially include: the S6-20, S6-21 and S6-30 series from BASF Corporation; the C-105, C-015, C-025 and C-035 series from Criterion Catalyst Company, L.P.; and the G-64 and G-84 series (including catalyst G-84C used in Examples 1-4 hereinafter) from United Catalysts, Inc. These catalysts typically contain 40-80% Fe_2O_3, 5-30% K_2O, and other promoters. All of such and similar catalysts are considered within the scope of this invention.

The method of this invention can be used in connection with the catalytic dehydrogenation of virtually any alkylaromatic hydrocarbon to a corresponding alkenylaromatic hydrocarbon. The appropriate combination of alkylaromatic hydrocarbon, catalyst and reaction conditions in order to obtain a particular desired alkenylaromatic hydrocarbon is generally well known in the art and, in any event, would be a matter of

choice and routine experimentation. The method of this invention is of particular utility in connection with regenerating and/or stabilizing a dehydrogenation catalyst in the process of converting ethylbenzene to styrene.

Fig. 1 is a flowchart that schematically illustrates one embodiment of the method of this invention wherein an alkali metal compound is added to an incoming feedstream as well as to the partially converted reactant stream passing between the stages of a multi-stage reactor. Although for purposes of discussing Fig. 1, the terms "feedstream" and "partially converted reactant stream" are used to help identify particular stages in the conversion process, elsewhere in this description these terms are considered generic and interchangeable. In Fig. 1, incoming feedstream 1 may be the feed of alkylaromatic hydrocarbon, for example ethylbenzene, and incoming feedstream 2 may be steam. As shown in Fig. 1, an effective amount of an alkali metal compound is added continually, that is either continuously or intermittently, to feedstream 2 by alkali metal supply means 46. Alternatively, the alkali metal compound can be added to feedstream 1. Feedstreams 1 and 2, including any alkali metal compound, are combined into reactant stream 3 and directed to the inlet of the first reactor stage 50, which is loaded with a suitable dehydrogenation catalyst. Alternatively, the alkali metal compound can be added after feedstreams 1 and 2 have been combined into reactant stream 3 prior to first reactor stage 50. Partial conversion of the alkylaromatic hydrocarbon, for example ethylbenzene to styrene, occurs in reactor stage 50.

The partially converted reactant stream or exit stream 4 emerging from reactor stage 50 is then passed through a reheater 52 to restore the heat lost in reactor stage 50 and to reestablish the optimum reaction temperature. Additional alkali metal compound from alkali metal supply means 66 is added continually, that is either continuously or intermittently, to the partially converted reactant stream 5 emerging from the reheater 52 before reactant stream 5 is directed to the inlet of second reactor stage 54. Alternatively, additional alkali metal compound can be added to the partially converted reactant stream 4 coming from

reactor stage 50 before it enters the reheater 52. Reactor stage 54 is also loaded with a suitable dehydrogenation catalyst. Further conversion of the alkylaromatic hydrocarbon occurs in reactor stage 54. It will be apparent to those skilled in the art that additional downstream reactor stages, such as a third or a fourth stage, each loaded with a suitable catalyst, may be utilized to obtain still further conversion of the alkylaromatic hydrocarbon. Addition of alkali metal compound to the reactant stream in accordance with the method of this invention may be advantageously employed between some or all of the reactor stages in a multi-stage reactor.

As shown in Fig. 1, the apparatus of this invention may advantageously include monitoring means for monitoring the chemical composition of the exit streams coming from the outlets of any one or more of the reactor stages, such as monitoring means 42 and 62 associated respectively with reactant streams 4 and 6. The monitoring means may also advantageously be coupled to activating means, such as electrical wires 44 and 64 respectively, for signalling and activating alkali metal compound supply means, such as pump or injection means 46 and 66 respectively, located upstream from the subject reactor stage, namely reactor stages 50 and 54 respectively.

The monitoring means can be adapted through conventional technology to send a signal to the alkali metal compound supply means whenever the exit stream from the subject reactor stage falls below a predetermined level of conversion or selectivity, which indicates degradation of catalyst activity in the reactor stage. Upon activation by the signal from the associated monitoring means, the alkali metal compound supply means would begin to supply alkali metal compound at a predetermined rate to the associated feedstream or reactant stream. For example, on signal from monitoring means 42 that the conversion or selectivity in first reactor stage 50 had dropped below a certain level, pump means 46 would begin to supply alkali metal compound to feedstream 2. The apparatus can be designed on activation to continue supplying alkali metal compound for a predetermined period of time or until

another signal from the associated monitoring means signals that catalyst activity in the subject reactor stage has been restored to the desired activity level.

As an alternative to the automated, intermittent addition system described above, it is also within the scope of this invention to continuously add predetermined amounts of alkali metal compound to the respective feedstreams or reactant streams, or, alternatively, to add alkali metal compound in predetermined amounts and at predetermined intervals. This may be combined with continuous or intermittent monitoring of one or more reactor stage exit streams. Upon signs of catalyst degradation in any reactor stage, means for increasing the addition of alkali metal compound to a feedstream or reactant stream upstream from the subject reactor stage can be manually activated. The increased rate of addition of alkali metal compound can be for a limited period of time until the desired catalyst activity level is restored or else it can be maintained at the new, higher rate.

Fig. 2 schematically illustrates in somewhat greater detail one preferred method and associated apparatus for adding alkali metal compound to a feedstream or a reactant stream in accordance with this invention. Conduit 10 in Fig. 2 contains and directs stream 12 in the direction of a reactor stage containing dehydrogenation catalyst as illustrated by the arrows. Stream 12 may represent, for example, feedstreams 1 or 2, the combined reactant stream 3, or partially converted reactant streams 4 and 5 as shown in Fig. 1. Alkali metal compound is added continually, that is either continuously or intermittently, to stream 12 in the form of aqueous solution 22 delivered through injection means 24 at the outlet end of an injection tube 20 fitted through an aperture in the wall of conduit 10. Stream 14, downstream from the outlet end of injection tube 20, represents a feedstream or a reactant stream that has been mixed with alkali metal compound in accordance with this invention.

Fig. 3 schematically illustrates an alternative method and associated apparatus for adding alkali metal compound to a feedstream or a reactant stream in accordance with this invention. Conduit 10 in Fig. 3 contains and directs stream 12 in the direction of a reactor

stage containing dehydrogenation catalyst as illustrated by the arrows 12 and 14. Stream 12 may represent, for example, feedstreams 1 or 2, the combined reactant stream 3, or partially converted reactant streams 4 and 5 as shown in Fig. 1. Conduit 10 further defines an adjacent vessel 30 in open vapor communication with the flow path of stream 12 and capable of retaining solid or liquid matter. Alkali metal compound in a solid or liquid state is fed as necessary to the interior 34 of vessel 30, through feed 32, so as to gradually vaporize and diffuse into the passing stream, as indicated by the arrows inside vessel 30. Stream 14, downstream from vessel 30, represents a feedstream or a reactant stream that has been mixed with alkali metal compound in accordance with this invention.

The alkali metal compounds that are useful in carrying out the method of this invention include all non-halogen sources of alkali metal ions. As used in connection with this invention, the term "alkali metal" is meant to include, but without limitation thereto, potassium, sodium, lithium and other less-common members of the group IA metals of the periodic table, such as rubidium and cesium. Cost considerations will ordinarily dictate the choice of a potassium or sodium compound, however. For some applications, members of the group IIA metals of the periodic table (e.g. magnesium, calcium, and so forth) may also have utility. Selection of an appropriate alkali metal compound is considered a matter of routine experimentation. In connection with the dehydrogenation of ethylbenzene to styrene, the preferred alkali metal compounds are potassium compounds, more particularly one or more compounds selected from the group consisting of potassium oxide, potassium hydroxide, and potassium carbonate. It is also within the scope of this invention to use mixtures of two or more alkali metal compounds. Because halogen ions, such as chloride, have typically been found to poison the dehydrogenation catalyst, alkali metal compounds such as potassium chloride should generally be avoided.

The amount of alkali metal compound to be added to a feedstream or reactant stream in accordance with this invention may vary depending upon the catalyst, the alkylaromatic

hydrocarbon, the reaction conditions, and the alkali metal compound itself. An effective amount or an effective rate of addition of alkali metal compound to the reactant stream sufficient to maintain high levels of conversion and selectivity can be determined by routine experimentation in order to optimize system performance. In general, it has been found that an effective amount of the alkali metal compound comprises from about 0.01 to about 100 parts by weight of alkali metal compound per million parts of the reactant stream, preferably from about 0.10 to about 10 parts by weight, on average over a representative time frame. A representative time frame as used herein means that period of time during which high levels of conversion and selectivity are maintained without further addition of alkali metal compound. It is also within the scope of this invention to vary the amount of alkali metal compound in the reactant stream over time to restore or to maintain optimum system performance.

The alkali metal compound may be added to the reactant stream either continuously or intermittently and, if intermittently, at regular or irregular intervals. Whether the alkali metal compound is added continuously or intermittently, the amounts added and, in the case of intermittent additions, the intervals selected, should be such to insure addition of an effective amount sufficient to restore or to maintain the desired high levels of conversion and selectivity. In general, such amounts will comprise from about 0.01 to about 100 parts weight of alkali metal compound per million parts of the reactant stream on average over a representative time frame.

The addition of the alkali metal compound to the reactant stream may be accomplished in a number of ways. One such addition method is to add the alkali metal compound in dry, solid, powdered form to a reactant stream. Alternatively, a solid lump of or a vessel containing the alkali metal compound in solid, liquid or solution form, can be placed in the path of the heated reactant stream and allowed to gradually vaporize into the passing stream, as illustrated in Fig. 3. Another and particularly preferred addition method

is to add the alkali metal compound in the form of an aqueous solution into a reactant stream, for example as described above in connection with Fig. 2. Because of ease of handling and the ability to automate the process, as described in connection with Fig. 1, the addition of alkali metal compound in the form of an aqueous solution will probably normally be the preferred commercial application of this invention. Still another addition method is to inject the alkali metal compound in a liquid form into the reactant stream. Still another addition method is to pre-vaporize the alkali metal compound and inject the vapor into the reactant stream.

The method of this invention will be better understood by reference to the following examples and test data, which are illustrative only and are not limiting of the scope or practice of this invention.

EXAMPLE 1

Steam and ethylbenzene at a molar ratio of 12 to 1 and a rate of 825 grams/hr was introduced into a reactor constructed with one inch schedule 40 stainless steel pipe and was heated in an 8-zone electrical oven. A total of 390 grams of a catalyst designated as G-84C and manufactured by United Catalysts, Inc., was loaded in the reactor in four sections. The reactor was packed with inert alumina balls on top of the first catalyst zone, between catalyst zones, and below the fourth zone. The reaction mixture entered the reactor at a temperature of 250°C and was preheated to 598°C as it entered into the first catalyst section. The average temperature of the four catalytic sections was kept within 1°C of 594°C. The reactor outlet was maintained at atmospheric pressure. Deactivation of catalyst was observed between 854 and 1298 hours on-stream time as shown in Table 1 below. The styrene selectivity increased slightly during this period due to decline in ethylbenzene conversion. At 1310 hours, the test unit was shut down and a stainless steel container loaded with 5.4 grams of ACS grade KOH was placed on top of the alumina. After the reactor was

restarted, a small amount of KOH vaporized continuously and was brought into contact with catalyst by the reactor feed stream. The temperature at the container was controlled such that KOH vapor pressure was equivalent to about 5 ppm (by weight) of total feed. The activity and selectivity of the catalyst were found to improve continuously between 1310 and 1500 hours. The catalyst activity then remained stable at about 2.3 percentage points higher in conversion and about 0.3 percentage points higher in styrene selectivity than before addition of KOH. At 1642 hours, the ethylbenzene conversion with KOH addition was 4.4 percentage points higher than what it would have been at the same on-stream time had the catalyst deactivated at the same rate as before the introduction of KOH. The styrene selectivity with KOH addition was 0.4 percentage points higher than that without KOH when compared with data at comparable ethylbenzene conversion (e.g., that at 854 hours).

TABLE 1

On-Stream Time (hours)	854	874	1283	1298	1476	1506	1535	1563	1620	1642
KOH (ppm)	0	0	0	0	5	5	5	5	5	5
Overall Conversion (mole %)	61.7	61.7	59.3	59.2	60.9	61.5	61.4	61.5	61.5	61.6
Overall Selectivity (mole %)	96.6	96.7	96.9	96.7	96.9	97.0	97.0	97.0	97.1	97.1

EXAMPLE 2

A second reactor constructed and loaded similar to that described in example 1 was loaded with 32.5 grams of G-84C catalyst in the top zone. The reactor was operated at average temperatures between 594 and 612°C, steam-to-ethylbenzene ratio between 9 and 12, at an outlet pressure of 14.7 psia between 0 and 3341 hours. The ethylbenzene feed rate

throughout the run was kept the same as that in example 1. Deactivation of the top zone catalyst was observed between 1722 and 1888 hours, as shown in Table 2 below, while the zone was kept within 1°C of 597°C. The steam-to-ethylbenzene ratio was 12 molar. At 3341 hours, the unit was shut down and a superheater, which allowed loading of KOH into it later on without interrupting the reaction, was installed upstream of the reactor inlet. After the unit was restarted, the top zone catalyst continued to deactivate while it was kept within 1°C of 622°C (Table 2). The steam-to-ethylbenzene ratio was 9 and the reactor outlet pressure was 14.7 psia. At 3481 hours, 7.0 grams of ACS grade KOH was loaded into the superheater while the reaction was uninterrupted. The superheater temperature was controlled to allow small amounts of KOH to vaporize continuously and be brought into contact with catalyst by the reaction mixture. The vapor pressure of KOH at such temperature was equivalent to about 9 ppm (by weight) of total feed. The ethylbenzene conversion in the top zone improved rapidly from 5.1% to 12.3% in 103 hours while the zone was kept within 1°C of 622°C, then increased gradually to 12.9% in 176 hours, and remained at such high level for 630 hours. This example illustrates that the catalyst which is immediately exposed to the feedstream is most susceptible to deactivation and also received the greatest benefit from the method of this invention.

Table 2

On-stream Time (hours)	1722	1800	1888	3347	3418	3473	3504	3584	3760	4132	4390
KOH (ppm)	0	0	0	0	0	0	9	9	9	9	9
Top Zone Conversion (mole%)	9.4	8.9	8.3	6.0	5.6	5.1	6.9	12.3	12.9	12.8	12.9

EXAMPLE 3

The reactor described in example 2 was run until the KOH in the superheater was depleted. The outlet pressure and the steam-to-ethylbenzene ratio were then adjusted to 6 psia and 8:1 molar, respectively. The top zone temperature was kept within 1°C of 622°C. Ageing of the top zone catalyst was observed between 4731 and 5022 hours while the styrene selectivity was deteriorating. At 5022 hours, an additional 1.90 grams of KOH was loaded into the superheater and the superheater temperature was controlled to give a KOH vapor pressure equivalent to about 2 ppm (weight) of total feed. The top zone conversion went up from 9.2% to 11.4% in 24 hours, then stabilized at about 11.0% for an extended period of time while the top zone styrene selectivity improved from 94.8 to 96.8%, as shown in Table 3 below.

Table 3

On-stream Time (hours)	4731	4925	5022	5026	5034	5046	5062	5114	5159	5204
KOH (ppm)	0	0	0	2	2	2	2	2	2	2
Top Zone Conversion (mole%)	11.0	9.6	9.2	10.1	11.1	11.4	11.0	11.1	11.1	11.0
Top Zone Selectivity (mole%)	95.0	94.8	94.8	94.5	95.1	96.4	96.7	96.9	96.8	96.7

EXAMPLE 4

In example 3, the average temperature of the four catalyst zones was kept within 1°C of 613°C. The reactor outlet pressure was 6 psia, and the steam-to-ethylbenzene ratio was 8:1 molar. The overall conversion decreased from 70.4% to 69.3% between 4728 and 5019

hours before the second batch of KOH was loaded. The overall styrene selectivity was stable at 96.9%. After KOH was loaded into the superheater at 5022 hours, the overall conversion increased steadily from 69.3 to 70.4% in two days and remained above that high level subsequently. The styrene selectivity remained stable at 96.9% in this period, i.e., the same selectivity was observed at a higher conversion.

Table 4

On-stream Time (hours)	4728	4860	4932	5019	5031	5047	5071	5121	5168	5211
KOH (ppm)	0	0	0	0	2	2	2	2	2	2
Overall Conversion (mole%)	70.4	70.1	69.7	69.3	69.8	70.2	70.4	70.4	70.5	70.5
Overall Selectivity (mole%)	96.9	96.9	96.9	96.9	96.8	96.9	96.9	96.9	96.9	97.0

The foregoing examples illustrate that the method of this invention is effective in restoring the activity of a partially deactivated catalyst and in stabilizing the conversion of ethylbenzene to styrene at a high level, while simultaneously maintaining or improving the selectivity to styrene.

Since certain changes may be made in the above-described apparatuses and processes without departing from the scope of the invention herein involved, it is intended that all matter contained in the above description shall be interpreted in an illustrative and not in a limiting sense.

Having described the invention, what we claim is:

CLAIMS

1. In a method for the catalytic dehydrogenation of an alkylaromatic hydrocarbon to obtain an alkenylaromatic hydrocarbon wherein a reactant stream including the alkylaromatic compound is brought into contact with a dehydrogenation catalyst containing iron and at least one alkali metal compound for a period continuing beyond an initial catalyst conditioning period of about 3-45 days, the improvement comprising initiating a continuous addition to the reactant stream, while continuing said dehydrogenation, of an effective amount of an alkali metal compound sufficient to regenerate said catalyst to levels of conversion and selectivity substantially the same as those at the end of the initial conditioning period.

2. Method of claim 1 wherein said catalyst consists essentially of about 40-80% Fe_2O_3 and about 5-30% K_2O.

3. Method of claim 1 wherein said alkylaromatic hydrocarbon is ethylbenzene and said alkenylaromatic hydrocarbon is styrene.

4. Method of claim 1 wherein said alkali metal compound is a potassium or sodium compound.

5. Method of claim 4 wherein said sodium or potassium compound is selected from the group consisting of sodium hydroxide, potassium hydroxide, sodium oxide, potassium oxide, sodium carbonate, potassium carbonate, and mixtures thereof.

6. Method of claim 1 wherein said alkali metal compound is potassium hydroxide.

7. Method of claim 1 wherein said effective amount of alkali metal compound comprises from about 0.01 to about 100 parts per million by weight of said reactant stream on average over a representative time frame.

8. Method of claim 3 wherein said effective amount of alkali metal compound is sufficient to regenerate said catalyst to obtain an overall ethylbenzene conversion level above about 55 mole % and a styrene selectivity above about 93 mole %.

9. Method of claim 1 wherein said improvement is carried out at substantially constant reaction temperature.

10. Method of claim 1 wherein said improvement is carried out in conjunction with periodic increases in reaction temperature.

11. Method of regenerating and stabilizing the activity of a dehydrogenation catalyst containing iron and at least one alkali metal compound in the catalytic dehydrogenation of an alkylaromatic hydrocarbon to obtain an alkenylaromatic hydrocarbon comprising the step of adding to a reactant stream containing said alkylaromatic hydrocarbon an effective amount of an alkali metal compound sufficient to restore and maintain high levels of conversion and selectivity.

12. Method of claim 11 wherein said catalyst consists essentially of about 40-80% Fe_2O_3 and about 5-30% K_2O.

13. Method of claim 11 wherein said alkali metal compound is added continuously to said reactant stream.

14. Method of claim 11 wherein said alkali metal compound is added intermittently to said reactant stream.

15. Method of claim 11 wherein said effective amount of alkali metal compound comprises from about 0.01 to about 100 parts per million by weight of said reactant stream on average over a representative time frame.

16. Method of claim 11 wherein said alkylaromatic hydrocarbon is ethylbenzene and said alkenylaromatic hydrocarbon is styrene.

17. Method of claim 11 wherein said effective amount of alkali metal compound is sufficient to restore and maintain levels of conversion and selectivity substantially the same as those established at the end of the initial conditioning period.

18. Method of claim 11 wherein said alkali metal compound is a potassium or sodium compound.

19. Method of claim 18 wherein said sodium or potassium compound is selected from the group consisting of sodium hydroxide, potassium hydroxide, sodium oxide, potassium oxide, sodium carbonate, potassium carbonate, and mixtures thereof.

20. Method of claim 11 wherein said alkali metal compound is potassium hydroxide.

21. Method of claim 11 wherein said alkali metal compound is added in dry, solid form to said reactant stream.

22. Method of claim 21 wherein a vessel containing said alkali metal compound is placed in the flow path of said reactant stream.

23. Method of claim 11 wherein said alkali metal compound is added in the form of an aqueous solution to said reactant stream.

24. Method of claim 11 wherein said alkali metal compound is added to said reactant stream as a vapor.

25. Method of claim 11 wherein said alkali metal compound is added to said reactant stream as a liquid.

26. Method of claim 11 wherein said catalytic dehydrogenation is carried out at substantially constant reaction temperature.

27. Method of claim 11 further comprising the step of periodically increasing the reaction temperature.

28. In a method for the catalytic dehydrogenation of an alkylaromatic hydrocarbon to obtain an alkenylaromatic hydrocarbon wherein a reactant stream including the alkylaromatic compound is brought into contact with a dehydrogenation catalyst containing iron and at least one alkali metal compound for a period continuing beyond an initial catalyst conditioning period of about 3-45 days, the improvement comprising initiating a continual addition to the reactant stream, while continuing said dehydrogenation, of an effective amount of an alkali metal compound sufficient to regenerate said catalyst to levels of conversion and selectivity substantially the same as those at the end of the initial conditioning

period.

29. Method of claim 28 wherein said catalyst consists essentially of about 40-80% Fe_2O_3 and about 5-30% K_2O.

30. Method of claim 28 wherein said alkylaromatic hydrocarbon is ethylbenzene and said alkenylaromatic hydrocarbon is styrene.

31. Method of claim 28 wherein said alkali metal compound is a potassium or sodium compound.

32. Method of claim 31 wherein said sodium or potassium compound is selected from the group consisting of sodium hydroxide, potassium hydroxide, sodium oxide, potassium oxide, sodium carbonate, potassium carbonate, and mixtures thereof.

33. Method of claim 28 wherein said alkali metal compound is potassium hydroxide.

34. Method of claim 28 wherein said effective amount of alkali metal compound comprises from about 0.01 to about 100 parts per million by weight of said reactant stream on average over a representative time frame.

35. Method of claim 30 wherein said effective amount of alkali metal compound is sufficient to regenerate said catalyst to obtain an overall ethylbenzene conversion level above about 55 mole % and a styrene selectivity above about 93 mole %.

36. Method of claim 28 wherein said improvement is carried out at substantially

constant reaction temperature.

37. Method of claim 28 wherein said improvement is carried out in conjunction with periodic increases in reaction temperature.

38. In a method for the catalytic dehydrogenation of an alkylaromatic hydrocarbon to obtain an alkenylaromatic hydrocarbon wherein a reactant stream including the alkylaromatic compound is brought into contact with a dehydrogenation catalyst containing iron and at least one alkali metal compound for a period continuing beyond an initial catalyst conditioning period of about 3-45 days, the improvement comprising continuously adding to the reactant stream, while continuing said dehydrogenation, an effective amount of an alkali metal compound sufficient to stabilize said catalyst substantially at the levels of conversion and selectivity attained at the end of the initial conditioning period.

39. Method of claim 38 wherein said catalyst consists essentially of about 40-80% Fe_2O_3 and about 5-30% K_2O.

40. Method of claim 38 wherein said alkylaromatic hydrocarbon is ethylbenzene and said alkenylaromatic hydrocarbon is styrene.

41. Method of claim 38 wherein said alkali metal compound is a potassium or sodium compound.

42. Method of claim 41 wherein said sodium or potassium compound is selected from the group consisting of sodium hydroxide, potassium hydroxide, sodium oxide, potassium oxide, sodium carbonate, potassium carbonate, and mixtures thereof.

43. Method of claim 38 wherein said alkali metal compound is potassium hydroxide.

44. Method of claim 38 wherein said effective amount of alkali metal compound comprises from about 0.01 to about 100 parts per million by weight of said reactant stream on average over a representative time frame.

45. Method of claim 40 wherein said effective amount of alkali metal compound is sufficient to stabilize said catalyst to obtain an overall ethylbenzene conversion level above about 55 mole % and a styrene selectivity above about 93 mole %.

46. Method of claim 38 wherein said improvement is carried out at substantially constant reaction temperature.

47. Method of claim 38 wherein said improvement is carried out in conjunction with periodic increases in reaction temperature.

48. In a method for the catalytic dehydrogenation of an alkylaromatic hydrocarbon to obtain an alkenylaromatic hydrocarbon wherein a reactant stream including the alkylaromatic compound is brought into contact with a dehydrogenation catalyst containing iron and at least one alkali metal compound for a period continuing beyond an initial catalyst conditioning period of about 3-45 days, the improvement comprising continually adding to the reactant stream, while continuing said dehydrogenation, an effective amount of an alkali metal compound sufficient to stabilize said catalyst substantially at the levels of conversion and selectivity attained at the end of the initial conditioning period.

49. Method of claim 48 wherein said catalyst consists essentially of about 40-80%

Fe_2O_3 and about 5-30% K_2O.

50. Method of claim 48 wherein said alkylaromatic hydrocarbon is ethylbenzene and said alkenylaromatic hydrocarbon is styrene

51. Method of claim 48 wherein said alkali metal compound is a potassium or sodium compound.

52. Method of claim 51 wherein said sodium or potassium compound is selected from the group consisting of sodium hydroxide, potassium hydroxide, sodium oxide, potassium oxide, sodium carbonate, potassium carbonate, and mixtures thereof.

53. Method of claim 48 wherein said alkali metal compound is potassium hydroxide.

54. Method of claim 48 wherein said effective amount of alkali metal compound comprises from about 0.01 to about 100 parts per million by weight of said reactant stream on average over a representative time frame.

55. Method of claim 50 wherein said effective amount of alkali metal compound is sufficient to stabilize said catalyst to obtain an overall ethylbenzene conversion level above about 55 mole % and a styrene selectivity above about 93 mole %.

56. Method of claim 48 wherein said improvement is carried out at substantially constant reaction temperature.

57. Method of claim 48 wherein said improvement is carried out in conjunction with

periodic increases in reaction temperature.

58. Process for catalytically converting an alkylaromatic hydrocarbon into an alkenylaromatic hydrocarbon for a period continuing beyond an initial catalyst conditioning period of about 3-45 days, said process comprising the steps of: (a) continuously adding an effective amount of about 0.01 to about 100 parts per million by weight of an alkali metal compound to a feedstream consisting essentially of said alkylaromatic hydrocarbon and steam to form a mixed stream; and (b) bringing said mixed stream into contact with dehydrogenation catalyst containing iron and at least one alkali metal compound while continuing said dehydrogenation.

59. Process of claim 58 wherein said catalyst consists essentially of about 40-80% Fe_2O_3 and about 5-30% K_2O.

60. Process of claim 58 wherein said alkylaromatic hydrocarbon is ethylbenzene and said alkenylaromatic hydrocarbon is styrene.

61. Process of claim 58 wherein said alkali metal compound is a potassium or sodium compound.

62. Process of claim 61 wherein said sodium or potassium compound is selected from the group consisting of sodium hydroxide, potassium hydroxide, sodium oxide, potassium oxide, sodium carbonate, potassium carbonate, and mixtures thereof.

63. Process of claim 58 wherein said alkali metal compound is potassium hydroxide.

64. Process of claim 58 wherein said alkali metal compound is added in dry, solid form.

65. Process of claim 58 wherein alkali metal compound in a solid or liquid state is placed in the flow path of said feedstream.

66 Process of claim 58 wherein said alkali metal compound is added in the form of an aqueous solution.

67. Process of claim 58 wherein said alkali metal compound is added as a vapor.

68. Process of claim 58 wherein said alkali metal compound is added as a liquid.

69. Process of claim 58 wherein said contact between said mixed stream and said dehydrogenation catalyst is carried out at substantially constant reaction temperature.

70. Process of claim 58 further comprising the step of periodically increasing the reaction temperature.

71. Process for catalytically converting an alkylaromatic hydrocarbon into an alkenylaromatic hydrocarbon for a period continuing beyond an initial catalyst conditioning period of about 3-45 days, said process comprising the steps of: (a) continually adding an effective amount of an alkali metal compound to a feedstream consisting essentially of said alkylaromatic hydrocarbon and steam to form a mixed stream, said effective amount of alkali metal compound comprising about 0.01 to about 100 parts per million by weight of said mixed stream over a representative time period; and (b) bringing said mixed stream into contact with a dehydrogenation catalyst containing iron and at least one alkali metal

compound while continuing said dehydrogenation.

72. Process of claim 71 wherein said catalyst consists essentially of about 40-80% Fe_2O_3 and about 5-30% K_2O.

73. Process of claim 71 wherein said alkylaromatic hydrocarbon is ethylbenzene and said alkenylaromatic hydrocarbon is styrene.

74. Process of claim 71 wherein said alkali metal compound is a potassium or sodium compound.

75. Process of claim 74 wherein said sodium or potassium compound is selected from the group consisting of sodium hydroxide, potassium hydroxide, sodium oxide, potassium oxide, sodium carbonate, potassium carbonate, and mixtures thereof.

76. Process of claim 71 wherein said alkali metal compound is potassium hydroxide.

77. Process of claim 71 wherein said alkali metal compound is added in dry, solid, powdered form.

78. Process of claim 71 wherein said alkali metal compound in a solid or liquid state is placed in the flow path of said feedstream.

79. Process of claim 71 wherein said alkali metal compound is added in the form of an aqueous solution.

80. Process of claim 71 wherein said alkali metal compound is added as a vapor.

81. Process of claim 71 wherein said alkali metal compound is added as a liquid.

82. Process of claim 71 wherein said contact between said mixed stream and said dehydrogenation catalyst is carried out at substantially constant reaction temperature.

83. Process of claim 71 further comprising the step of periodically increasing the reaction temperature.

84. Process for catalytically converting an alkylaromatic hydrocarbon into an alkenylaromatic hydrocarbon for a period continuing beyond an initial catalyst conditioning period of about 3-45 days, said process comprising the steps of: (a) continuously adding an effective amount of an alkali metal compound to a first feedstream consisting essentially of steam to form a second feedstream of steam and alkali metal compound; (b) mixing said second feedstream with a third feedstream consisting essentially of said alkylaromatic hydrocarbon to form a fourth feedstream of steam, alkali metal compound, and alkylaromatic hydrocarbon, such that said effective amount of alkali metal compound comprises about 0.01 to about 100 parts per million by weight of said fourth feedstream; and (c) bringing said fourth feedstream into contact with a dehydrogenation catalyst containing iron and at least one alkali metal compound while continuing said dehydrogenation.

85. Process for catalytically converting an alkylaromatic hydrocarbon into an alkenylaromatic hydrocarbon for a period continuing beyond an initial catalyst conditioning period of about 3-45 days, said process comprising the steps of: (a) continually adding an effective amount of an alkali metal compound to a first feedstream consisting essentially of

steam to form a second feedstream of steam and alkali metal compound; (b) mixing said second feedstream with a third feedstream consisting essentially of said alkylaromatic hydrocarbon to form a fourth feedstream of steam, alkali metal compound, and alkylaromatic hydrocarbon, such that said effective amount of alkali metal compound comprises about 0.01 to about 100 parts per million by weight of said fourth feedstream over a representative time period; and (c) bringing said fourth feedstream into contact with a dehydrogenation catalyst containing iron and at least one alkali metal compound while continuing said dehydrogenation.

86. Process for catalytically converting an alkylaromatic hydrocarbon into an alkenylaromatic hydrocarbon for a period continuing beyond an initial catalyst conditioning period of about 3-45 days, said process comprising the steps of: (a) continuously adding an effective amount of an alkali metal compound to a first feedstream consisting essentially of said alkylaromatic hydrocarbon to form a second feedstream of alkylaromatic hydrocarbon and alkali metal compound; (b) mixing said second feedstream with a third feedstream consisting essentially of steam to form a fourth feedstream of alkylaromatic hydrocarbon, alkali metal compound, and steam, such that said effective amount of alkali metal compound comprises about 0.01 to about 100 parts per million by weight of said fourth feedstream; and (c) bringing said fourth feedstream into contact with a dehydrogenation catalyst containing iron and at least one alkali metal compound while continuing said dehydrogenation.

87. Process for catalytically converting an alkylaromatic hydrocarbon into an alkenylaromatic hydrocarbon for a period continuing beyond an initial catalyst conditioning period of about 3-45 days, said process comprising the steps of: (a) continually adding an effective amount of an alkali metal compound to a first feedstream consisting essentially of said alkylaromatic hydrocarbon to form a second feedstream of alkylaromatic hydrocarbon

and alkali metal compound; (b) mixing said second feedstream with a third feedstream consisting essentially of steam to form a fourth feedstream of alkylaromatic hydrocarbon, alkali metal compound, and steam, such that said effective amount of alkali metal compound comprises about 0.01 to about 100 parts per million by weight of said fourth feedstream over a representative time period; and (c) bringing said fourth feedstream into contact with a dehydrogenation catalyst containing iron and at least one alkali metal compound while continuing said dehydrogenation.

88. Apparatus for converting an alkylaromatic hydrocarbon into an alkenylaromatic hydrocarbon comprising in combination: at least one reaction chamber comprising inlet and outlet means and loaded with a dehydrogenation catalyst; conduit means for delivering to the inlet of said reaction chamber a reactant stream comprising the alkylaromatic hydrocarbon and steam; and alkali metal compound supply means for continuously or intermittently adding alkali metal compound to said reactant stream.

89. Apparatus of claim 88 additionally comprising monitoring means for monitoring the chemical composition of the exit stream at the outlet of said reaction chamber.

90. Apparatus of claim 89 additionally comprising activation means coupled to said monitoring means and to said alkali metal compound supply means for activating said alkali metal supply means on receipt of a signal from said monitoring means.

91. Apparatus of claim 88 wherein said alkali metal compound supply means is activated manually.

92. Apparatus of claim 88 wherein said alkali metal compound supply means is activated automatically whenever the activity level of said catalyst drops below a predetermined level.

93. Apparatus of claim 88 wherein said catalyst contains iron and at least one alkali metal compound.

94. Apparatus of claim 88 wherein said catalyst consists essentially of about 40-80% Fe_2O_3 and about 5-30 K_2O.

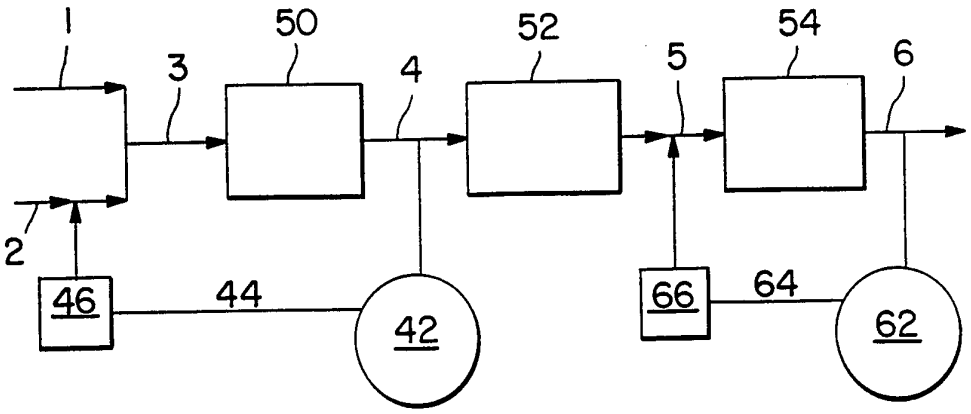

FIG. 1

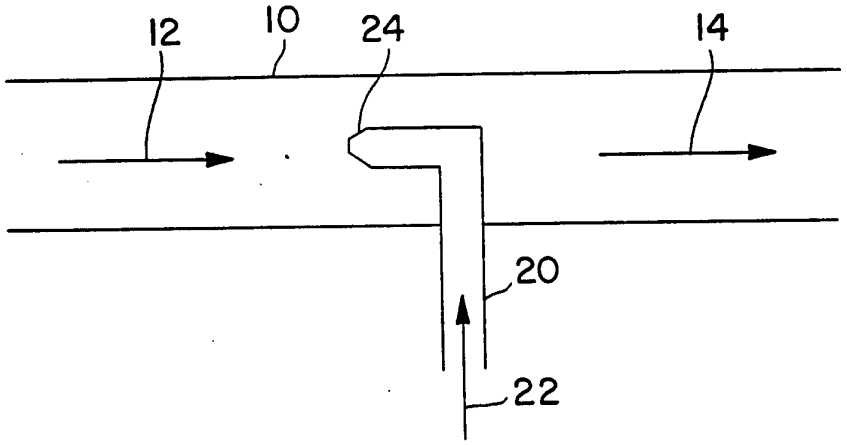

FIG. 2

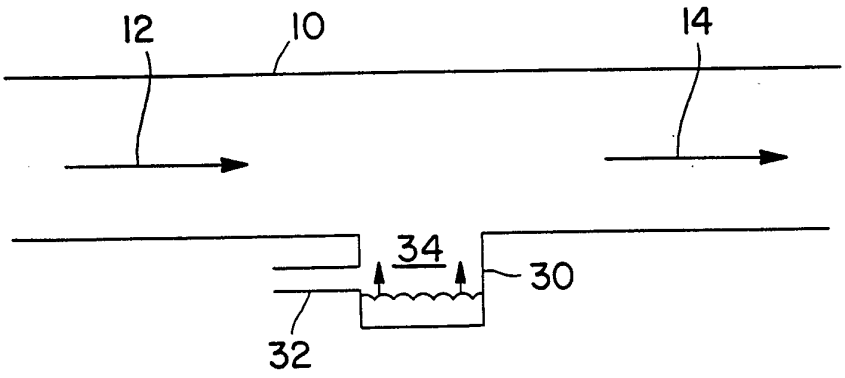

FIG. 3

INTERNATIONAL SEARCH REPORT

Ir. ational application No.
PCT/US94/07474

A. CLASSIFICATION OF SUBJECT MATTER

IPC(5) :CO7C 5/42, 5/327; B01J 20/34, 35/12, 38/04
US CL :585/440, 441, 444, 445, 904, 906; 502/3, 34
According to International Patent Classification (IPC) or to both national classification and IPC

B. FIELDS SEARCHED

Minimum documentation searched (classification system followed by classification symbols)

U.S. : 585/440, 441, 444, 445, 904, 906; 502/3, 34

Documentation searched other than minimum documentation to the extent that such documents are included in the fields searched

NONE

Electronic data base consulted during the international search (name of data base and, where practicable, search terms used)

NONE

C. DOCUMENTS CONSIDERED TO BE RELEVANT

Category*	Citation of document, with indication, where appropriate, of the relevant passages	Relevant to claim No.
Y	US, A, 3,755,482 (Nunnally et al) 28 August 1973, Abstract, col. 2, lines 7-14	9,10,26,27, 36,37,46, 47,56,57, 69,70,82, 83
Y	US, A, 4,590,324 (Satek) 20 May 1986,col. 2, line 62 to col. 3, line30; col. 5, lines 38-51; col. 6, line 54 to col. 7, line 18, col. 8, lines 21-26	1-94
Y	US, A, 4,902,845 (Kim et al) 20 February 1990,col. 3, line 27 to col. 5, line 36	1-94
Y	DD, A, 298,353 (Germany) 20 February 1992, Pages 1 and 2 (English translation)	1-94

☐ Further documents are listed in the continuation of Box C. ☐ See patent family annex.

*	Special categories of cited documents:	"T"	later document published after the international filing date or priority date and not in conflict with the application but cited to understand the principle or theory underlying the invention
"A"	document defining the general state of the art which is not considered to be of particular relevance	"X"	document of particular relevance; the claimed invention cannot be considered novel or cannot be considered to involve an inventive step when the document is taken alone
"E"	earlier document published on or after the international filing date	"Y"	document of particular relevance; the claimed invention cannot be considered to involve an inventive step when the document is combined with one or more other such documents, such combination being obvious to a person skilled in the art
"L"	document which may throw doubts on priority claim(s) or which is cited to establish the publication date of another citation or other special reason (as specified)	"&"	document member of the same patent family
"O"	document referring to an oral disclosure, use, exhibition or other means		
"P"	document published prior to the international filing date but later than the priority date claimed		

Date of the actual completion of the international search 09 AUGUST 1994	Date of mailing of the international search report SEP 02 1994
Name and mailing address of the ISA/US Commissioner of Patents and Trademarks Box PCT Washington, D.C. 20231 Facsimile No. NOT APPLICABLE	Authorized officer Denise Boyd for P. ACHUTAMURTHY Telephone No. (703) 308-3804

Form PCT/ISA/210 (second sheet)(July 1992)*