(No Model.) 2 Sheets—Sheet 1.

D. S. GREEN.

MACHINE FOR GENERATING ILLUMINATING GAS.

No. 456,116. Patented July 14, 1891.

Fig. 1.

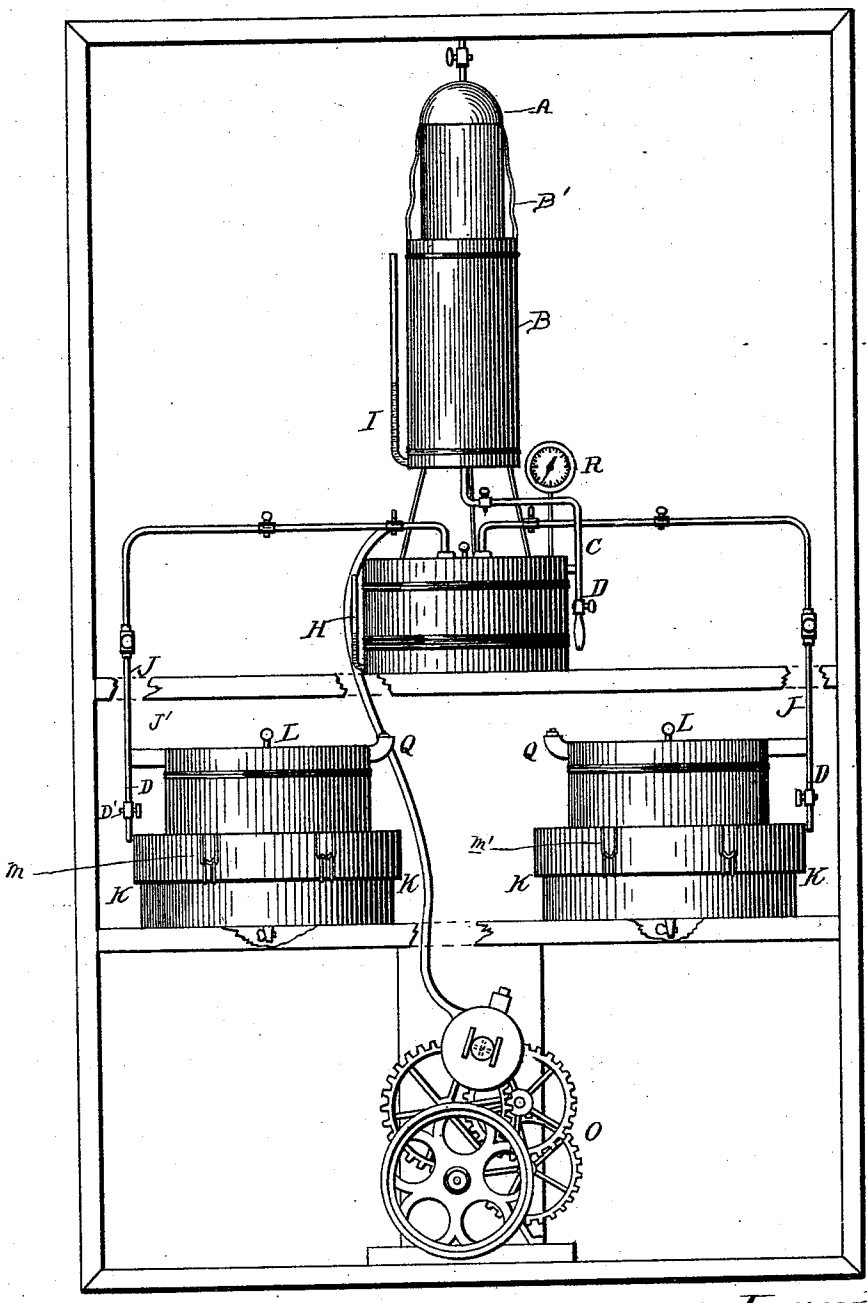

Witnesses:

Inventor:
D. S. Green
By
Baxter Smith & Preston Vaughn
attys & Solrs.

THE NORRIS PETERS CO., PHOTO-LITHO., WASHINGTON, D. C.

(No Model.) 2 Sheets—Sheet 2.

D. S. GREEN.

MACHINE FOR GENERATING ILLUMINATING GAS.

No. 456,116. Patented July 14, 1891.

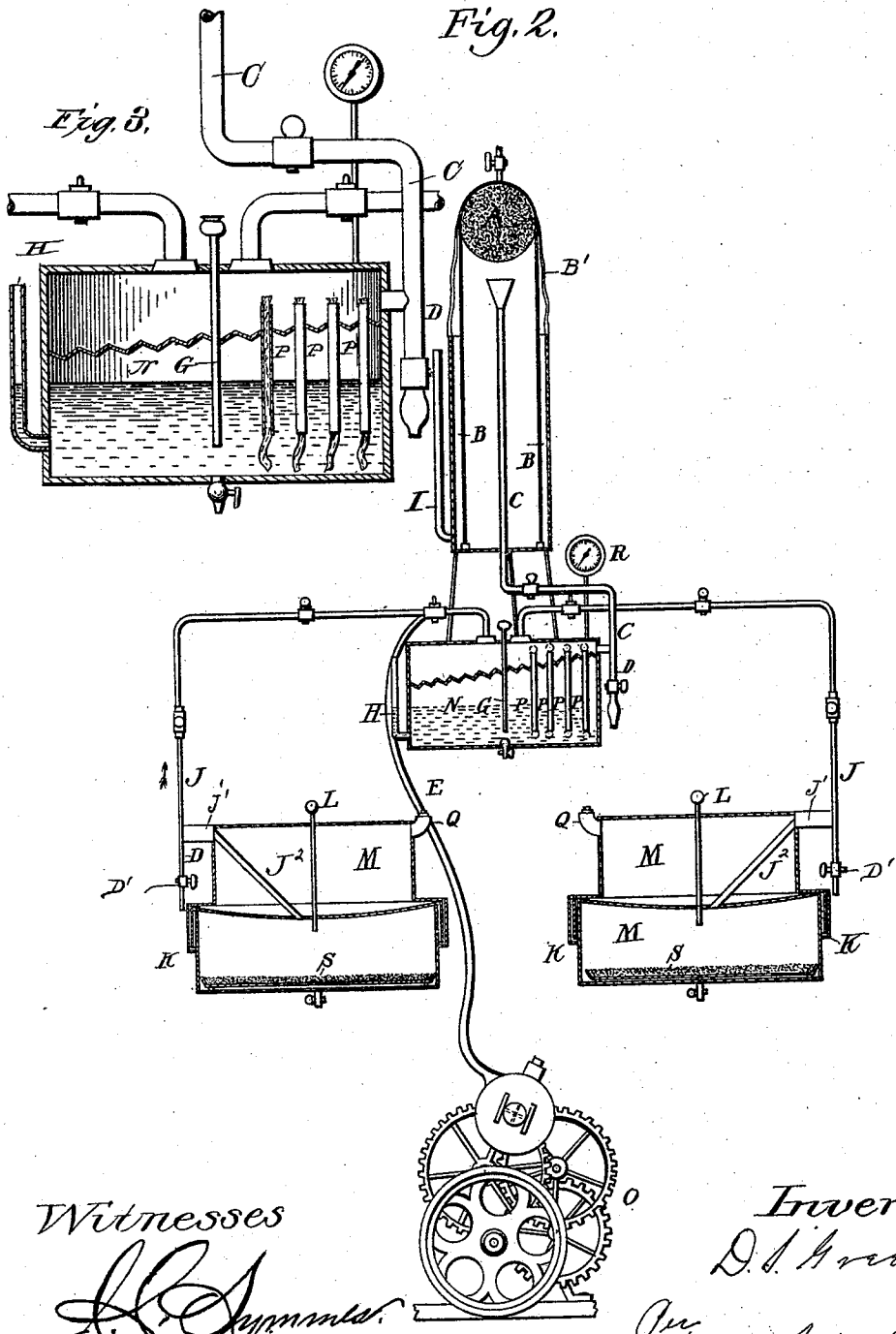

Witnesses

J. C. Symmes.

J. W. Rudolph.

Inventor

D. S. Green

Per Baxter Smith & Preston Vaughn

Attys in fact.

THE NORRIS PETERS CO., PHOTO-LITHO., WASHINGTON, D. C.

UNITED STATES PATENT OFFICE.

DAVID S. GREEN, OF NASHVILLE, TENNESSEE, ASSIGNOR TO JOSEPH C. McCRORY AND WILLIAM P. HOUZE, BOTH OF SAME PLACE.

MACHINE FOR GENERATING ILLUMINATING-GAS.

SPECIFICATION forming part of Letters Patent No. 456,116, dated July 14, 1891.

Application filed November 24, 1890. Serial No. 372,555. (No model.)

To all whom it may concern:

Be it known that I, DAVID S. GREEN, of Nashville, Davidson county, State of Tennessee, have invented a certain Machine for Generating Illuminating-Gas, of which the following is a specification.

My invention relates to an improvement in gas-machines; and it consists in the construction and arrangement of parts hereinafter described, and definitely pointed out in the claims.

The object of my invention is to provide an apparatus for generating illuminating-gas, which will be simple in construction, easily operated, and cheaply manufactured. This object I attain by the construction illustrated in the accompanying drawings, in which like letters of reference indicate like parts in the several views, and in which—

Figure 1 is a front elevation of my apparatus, and Fig. 2 is a longitudinal vertical section through the same. Fig. 3 is a detail longitudinal section through the carburetor.

In the drawings, M represents a generating-tank formed with an upper and lower chamber or compartment, the latter having a receptacle K surrounding the same, in which the lower edge of the upper portion rests. This receptacle is preferably filled with water to form a seal between the compartments. In the bottom of the lower compartment is placed a pan S, in which suitable ingredients are placed. In the bottom of the upper chamber is formed a feed-opening leading into the lower chamber or compartment, which is closed by a suitable plug L, extending through the upper chamber to the outside of the tank. By raising the plug the mixture to be placed in the upper chamber is permitted to pass into the lower chamber onto the ingredients contained in the pan and thereby generate a gas, which passes through a pipe J^2, extending through the upper compartment or chamber up to and into a horizontal connecting-pipe J′ on the outside of the casing, which connects with a pipe J, leading into an elevated carburetor N, hereinafter described. The upper and lower chamber are united on their outer sides by suitable links *m*, consisting of two looped wires attached, respectively, to the upper and lower parts of the tank M, their meeting ends being interlocked in any suitable manner, so that when the pan is to be replenished with material the top part is removed and access thereby had through the top of the lower part, it being understood that the division-wall between the two chambers forms a bottom for the upper chamber, so that a suitable liquid may be placed therein.

Q represents a spout through which the upper chamber is filled.

The carburetor N has an inclined serrated partition therein, through which suitable wick-tubes P pass and extend to near the bottom of the carburetor, in which portion hydrocarbon oil or gasoline is placed, the same being introduced through a tube G, extending through the partition and top of the carburetor. On the side of the carburetor N is a gage H to indicate the amount of liquid contained in the carburetor. At the bottom of the tank is a suitable discharge-cock for drawing off the liquid when it is desired.

Located below the carburetor N or at any suitable point is a motor O, which actuates a suitable fan for forcing cold air up through the pipe E, which enters the pipe J and discharges the air with the gas into the vapors contained in the carburetor N, the pipe J entering the top of the carburetor, and the mixed gas and air being forced onto the serrated partition is simulated or distributed throughout the carburetor above the partition.

C is a discharge-pipe leading out from the upper end of the carburetor N and extending up into a casing B or bell, its upper end being flared, so that the gas may spread when discharged from the pipe into the casing. The casing or bell B is located in a surrounding tank which is designed to be filled with water to form a seal, the water flowing below and into the casing or bell, and thereby forms a balance to regulate the pressure of the gas. The top of the bell B is secured to the top of the surrounding tank to prevent its upward movement by the straps B′. At the upper end of the casing is located a scrubber A, of any known description, out of which the service-pipe leads.

I is a water-gage on the side of the surrounding tank, and R is pressure-gage on the carburetor N.

D are blow-offs on pipes J and C to reduce the pressure in the apparatus. Suitable cocks are placed in the several pipes for shutting off the gas.

In operation the upper chambers of tanks M are filled with a suitable liquid, preferably ninety-five per cent. of water and five per cent. of sulphuric acid, and a mixture of broken marble or oyster-shells and iron clippings is placed in the pan. The same is then saturated with the liquid, which is allowed to fall on the same by removing the plug L. Carbonic-acid gas and hydrogen gas are thus produced, which rises in the pipe J or is drawn up by the force of the pure air entering through pipe E and discharged into the carburetor N, where it mixes with the vapors arising from the gasoline in the carburetor, the wicks in the tubes P at all times drawing the contents of the carburetor up above the partition. The mixture of the gases and air forms an illuminating-gas, which passes into the casing or bell B through the scrubber A and into the service-pipes. The serrations on the partition in the carburetor N cause a complete mixing of the gases, and also cause the gasoline to cover the top of the same, thereby vaporizing it more rapidly.

I may use two generating-tanks, as shown, when desired, so that should one tank become exhausted the other may be used, the air-supply answering for both tanks, the cock arranged at the union of the air-pipe and pipe J being turned to cut off the gas from the tank on that side. When the pressure in the carburetor becomes such as to cause danger of an explosion or in other ways affect the operation of the apparatus, the gas is cut off and the air alone allowed to enter. It being under pressure quickly forces the gasoline and mixed gas from the carburetor out of the cock D. The cold oxygen entering the tank N through pipe E neutralizes the gases and adds to the brilliancy of the light for which the gas is intended.

Having thus described my invention, what I claim as new, and desire to secure by Letters Patent, is—

1. In a gas-machine, the combination of a tank having two chambers, means for allowing the contents of one chamber to flow into the other, a carburetor, a pipe connecting the tanks with the carburetor, an inclined serrated partition in the carburetor, tubes extending through the partition, wicks in the tubes, a pipe leading into the connecting-pipe, a motor for forcing air through the same, a discharge-pipe for the carburetor, a casing into which the discharge-pipe enters, and a scrubber on the casing, substantially as described.

2. In a gas-machine, the combination, with a divided generating-tank, connections between the divided parts thereof, a gas-bell, and a scrubber, of a carburetor having connections with the tank, bell, or scrubber, an inclined serrated partition in the carburetor, a series of wicks passing through the partition, and a feed-pipe passing through the top of the tank and partition, substantially as described.

3. In a gas-machine, the combination of a divided generating-tank having an upper and lower chamber, a receptacle in the lower chamber, means for discharging the contents of the upper chamber into the receptacle, a pipe leading out from the top of the lower chamber, a carburetor into which the pipe leads, an air-pipe leading into said other pipe, means for supplying air to the same under pressure, a partition in the carburetor, a water-sealed casing, a pipe leading from the carburetor, wick-tubes passing through the partition, wicks in the tubes into the same, and a scrubber in the casing, substantially as described.

4. In a gas-machine, the combination of a carburetor having an inclined serrated partition therein, wick-tubes passing through the partition and extending down to a point near the bottom of the tank, wicks in the tubes, a supply and discharge opening in the top of the carburetor, and a generating-carburetor and scrubber connected by suitable pipes with the mixing-tank, substantially as described.

5. In a gas-machine, the combination of a generating-tank formed in two separable parts having independent chambers therein, a water seal between the edges of the parts, links detachably uniting the parts, a plug L, fitting in an opening in the bottom of the upper chamber, a pipe leading from the lower chamber, and a carburetor into which the pipe leads, substantially as described.

This invention I claim as my own, and in the presence of two witnesses I affix my signature and seal this 30th day of June, 1890, at Nashville, Tennessee.

DAVID S. GREEN. [L. S.]

Witnesses:
F. J. SOFGE,
RUDOLPH SOFGE.