US 20200039446A1

(19) **United States**

(12) **Patent Application Publication** (10) **Pub. No.: US 2020/0039446 A1**

Pajic (43) **Pub. Date: Feb. 6, 2020**

(54) **ELECTRONIC DEVICE HOLDING ASSEMBLY FOR VEHICLES**

(71) Applicant: **SmartTray International, LLC**, Scottsdale, AZ (US)

(72) Inventor: **Nick Pajic**, Phoenix, AZ (US)

(21) Appl. No.: **16/586,213**

(22) Filed: **Sep. 27, 2019**

Related U.S. Application Data

(63) Continuation of application No. 15/791,692, filed on Oct. 24, 2017, now Pat. No. 10,427,619, which is a continuation of application No. 15/445,754, filed on Feb. 28, 2017, now Pat. No. 9,796,344, which is a continuation-in-part of application No. 14/753,264, filed on Jun. 29, 2015, now Pat. No. 9,701,234, which is a continuation of application No. 14/541,044, filed on Nov. 13, 2014, now Pat. No. 9,067,682, which is a continuation-in-part of application No. 14/203,547, filed on Mar. 10, 2014, now Pat. No. 9,168,876, which is a continuation-in-part of application No. 13/644,382, filed on Oct. 4, 2012, now Pat. No. 8,667,904.

(60) Provisional application No. 61/641,098, filed on May 1, 2012, provisional application No. 61/546,969, filed on Oct. 13, 2011.

Publication Classification

(51) **Int. Cl.**

B60R 11/02	(2006.01)
B64D 11/00	(2006.01)
B64D 11/06	(2006.01)
A47B 23/00	(2006.01)
B60N 3/00	(2006.01)
H02J 7/00	(2006.01)
H02J 7/02	(2006.01)

(52) **U.S. Cl.**

CPC ***B60R 11/0252*** (2013.01); ***B64D 11/00152*** (2014.12); ***B64D 11/0638*** (2014.12); ***A47B 23/00*** (2013.01); ***B60N 3/002*** (2013.01); ***B60R 11/02*** (2013.01); *A47B 2021/066* (2013.01); ***H02J 7/025*** (2013.01); ***B64D 11/0015*** (2013.01); ***B64D 11/0605*** (2014.12); ***B60N 3/004*** (2013.01); *Y10T 29/49826* (2015.01); ***H02J 7/0044*** (2013.01)

(57) **ABSTRACT**

A holding assembly for holding portable electronic devices increases passenger convenience and comfort. The holding assembly comprises a plurality of independently movable planar members that engage one or more portable electronic devices to hold the portable electronic devices. The planar members may each be moved between a first position and a second position. The holding assembly may be opened to hold a portable electronic device and closed when not in use in this manner.

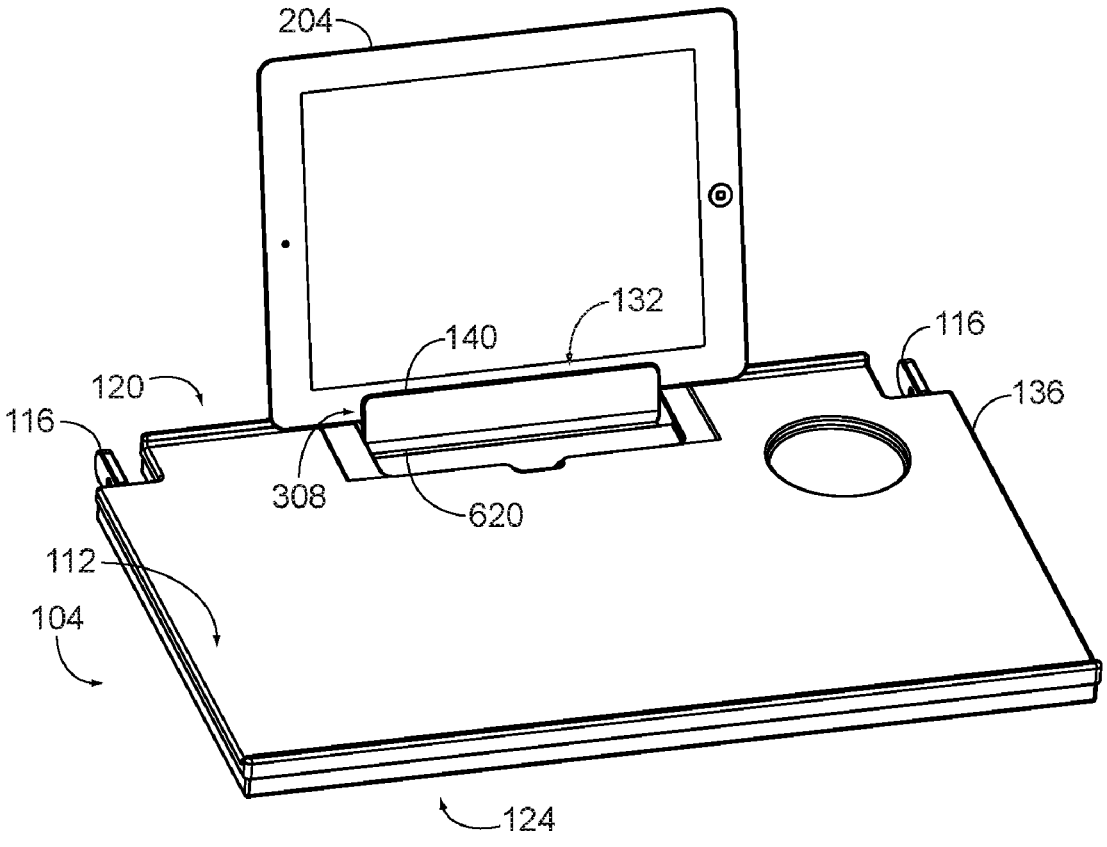

FIG. 1A

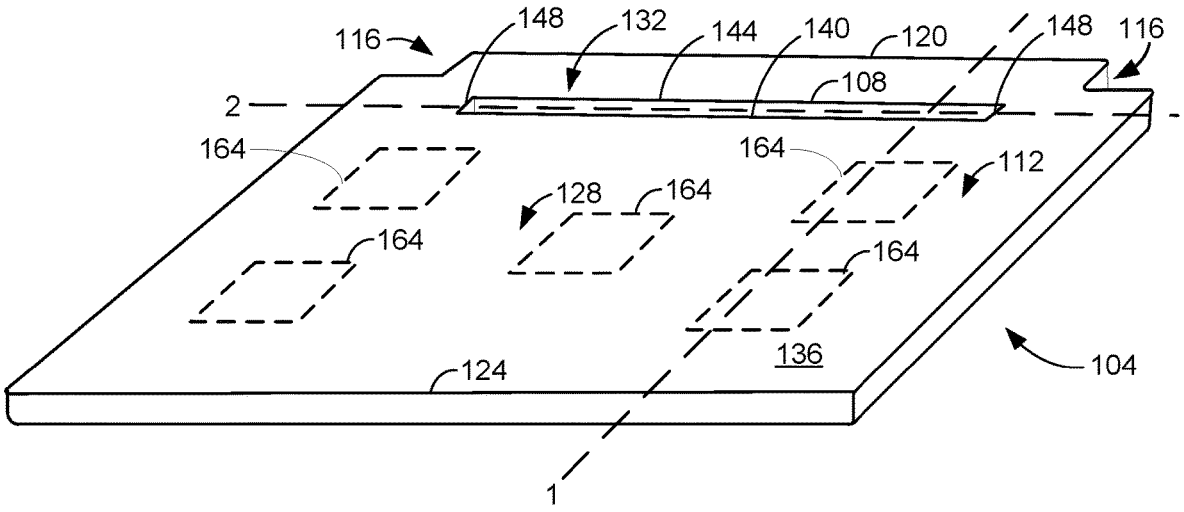

FIG. 1B

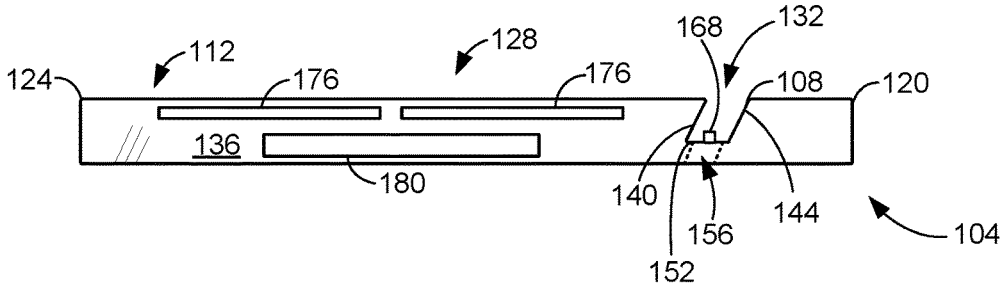

FIG. 1C

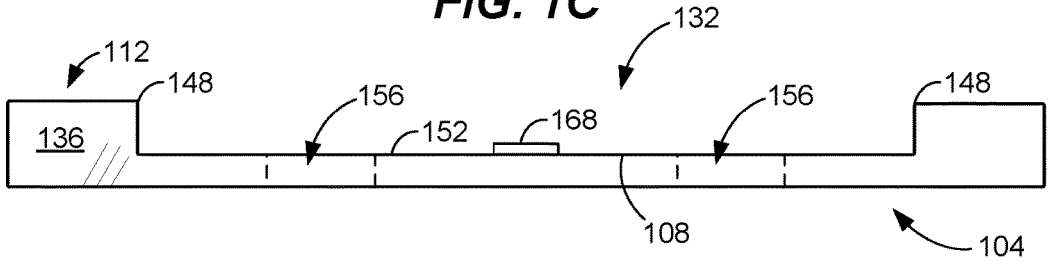

FIG. 1D

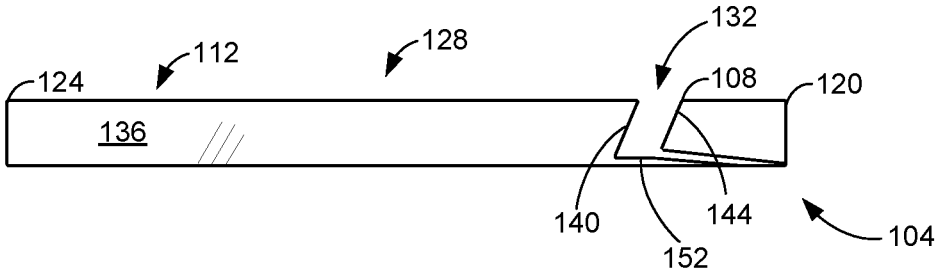

FIG. 1E

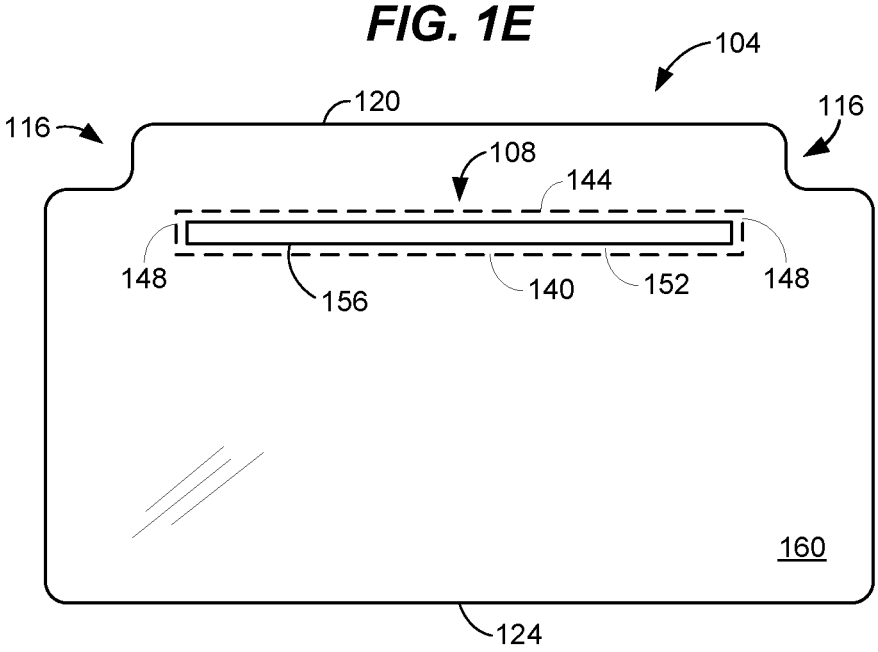

FIG. 1F

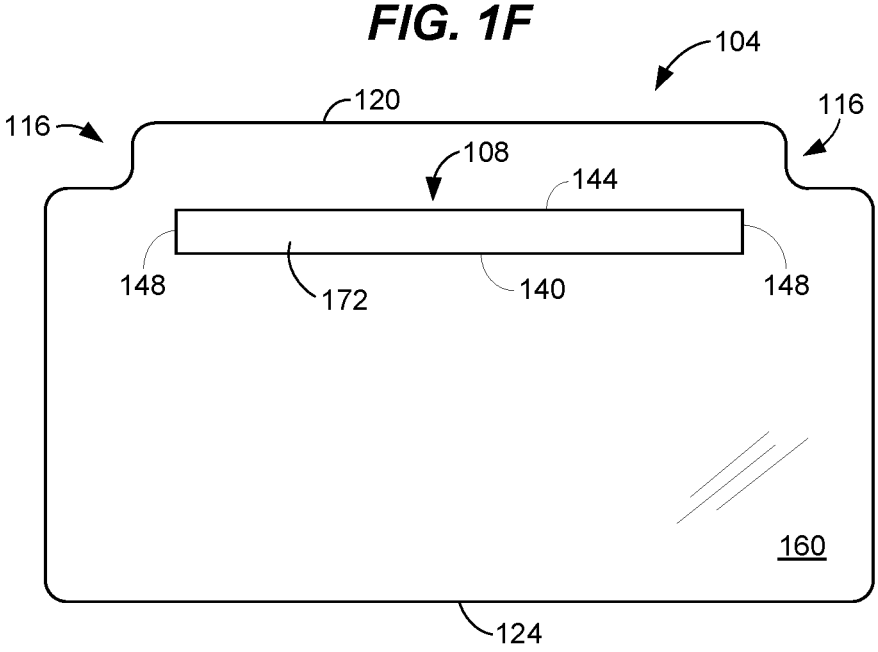

FIG. 2

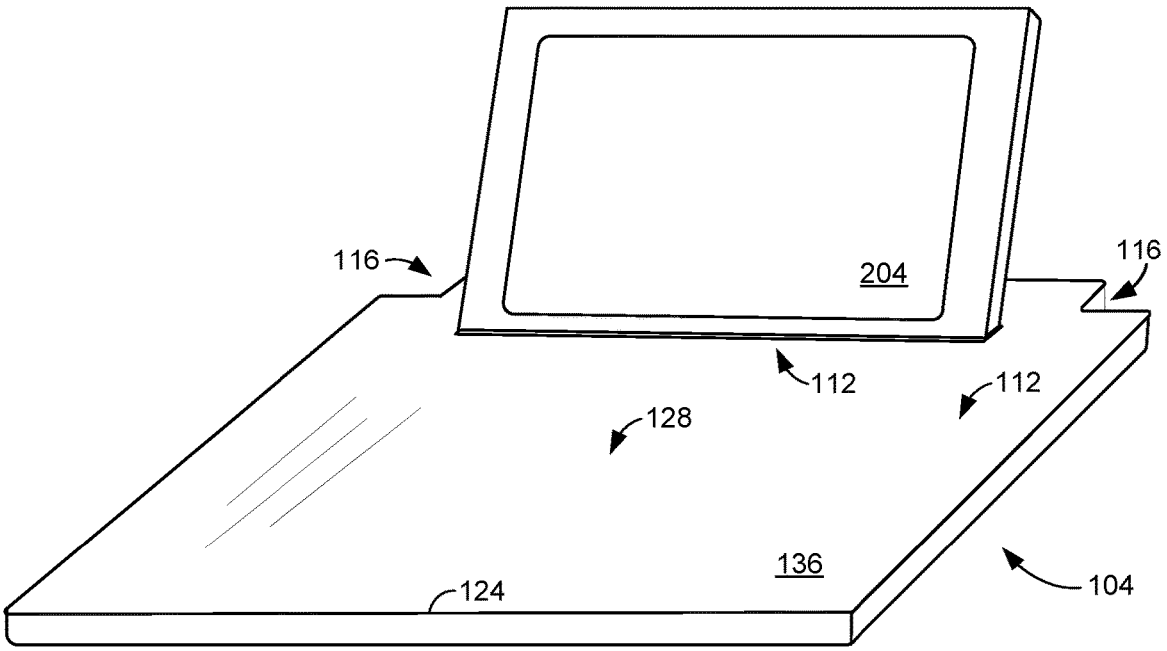
116
204
116
112
112
128
136
124
104

FIG. 3A

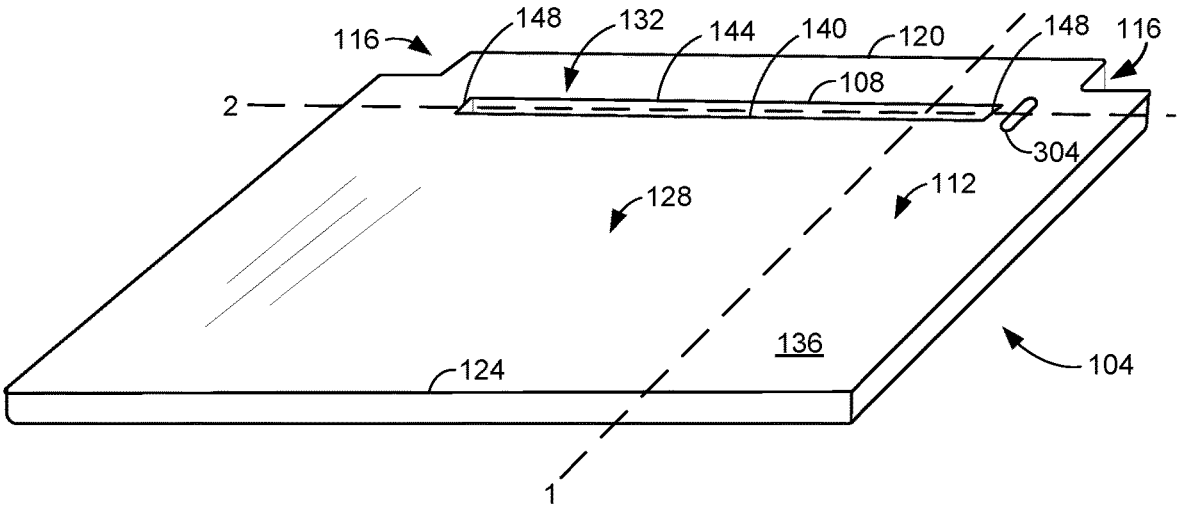
116
148
132
144
140
120
148
116
2
108
304
128
112
136
124
104
1

FIG. 3B

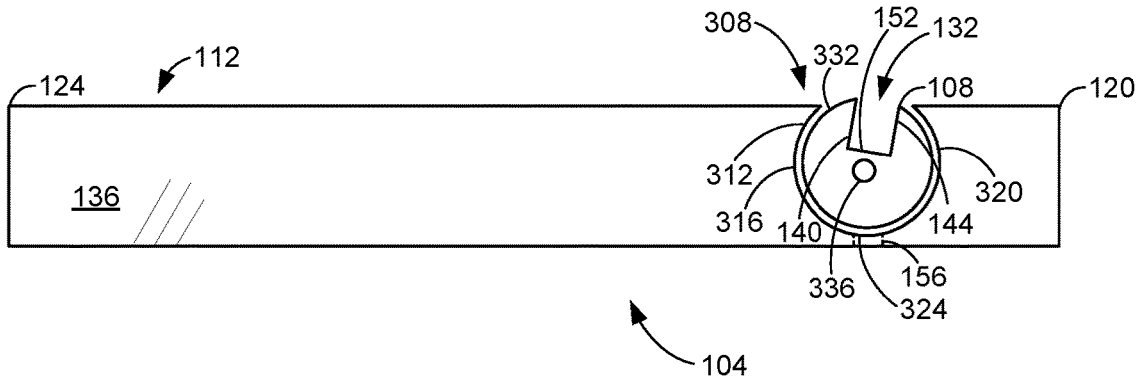

FIG. 3C

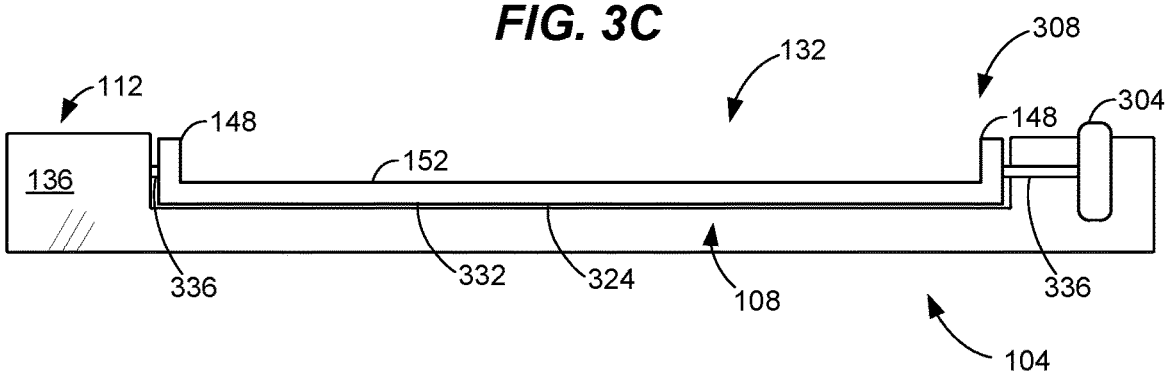

FIG. 4A

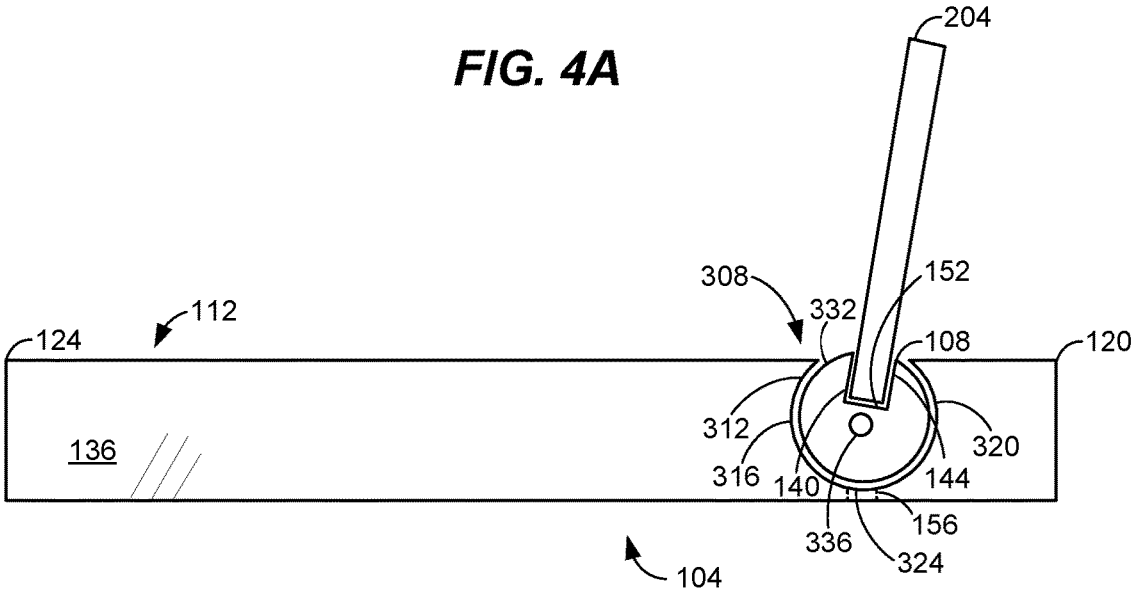

FIG. 4B

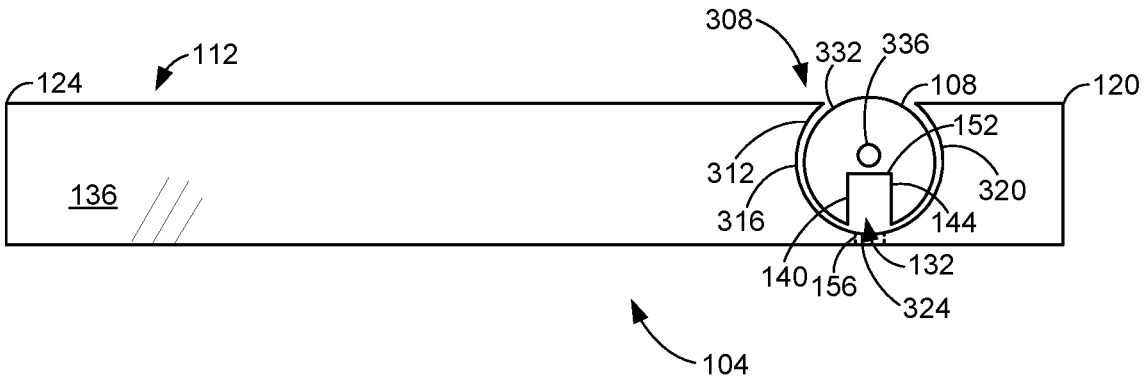
308
332
336
112
124
108
120
152
312
320
136
316
144
140
156
132
324
104

FIG. 4C

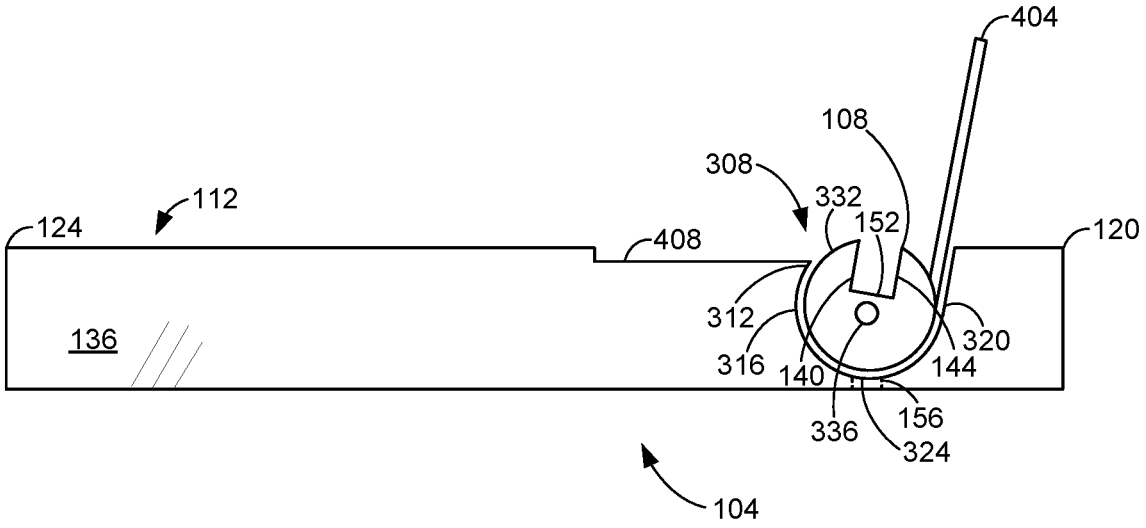
404
108
308
332
112
124
152
120
408
312
136
320
316
140
144
336
156
324
104

FIG. 4D

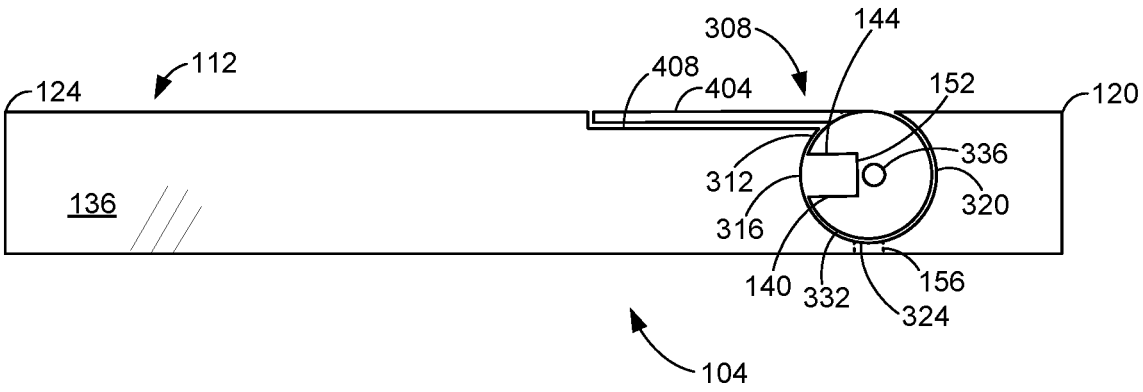
308
144
112
124
408
404
152
120
336
312
320
136
316
140
332
156
324
104

FIG. 4E

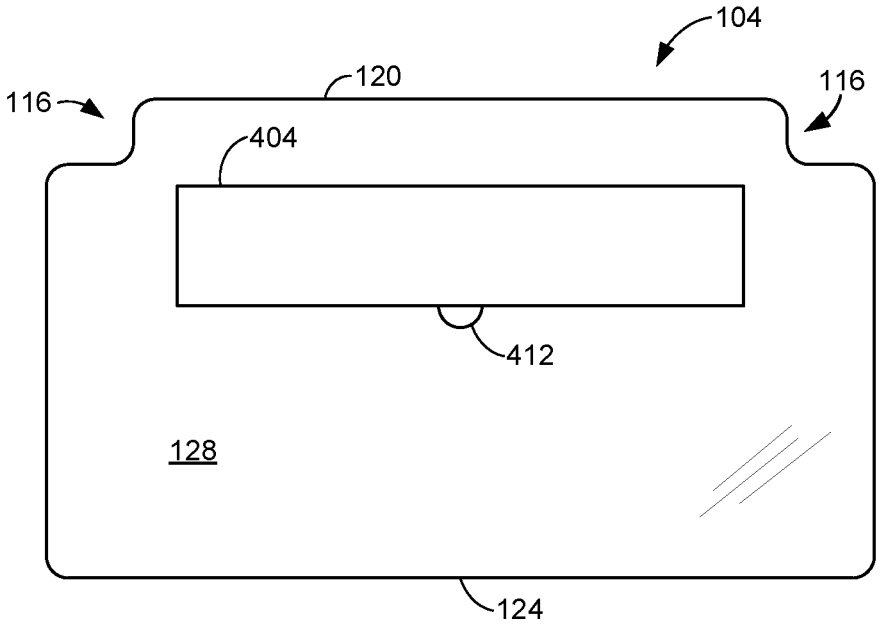
104
120
116
116
404
412
128
124

FIG. 4F

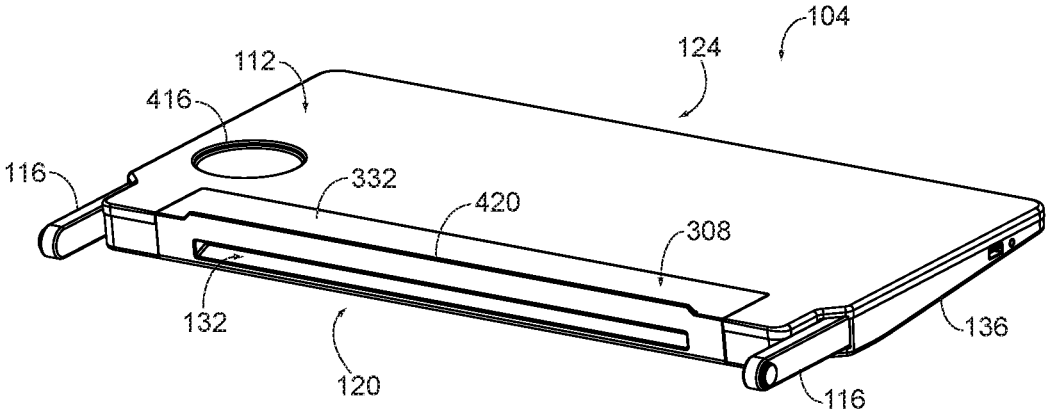
104
124
112
416
116
332
420
308
132
120
136
116

FIG. 4G

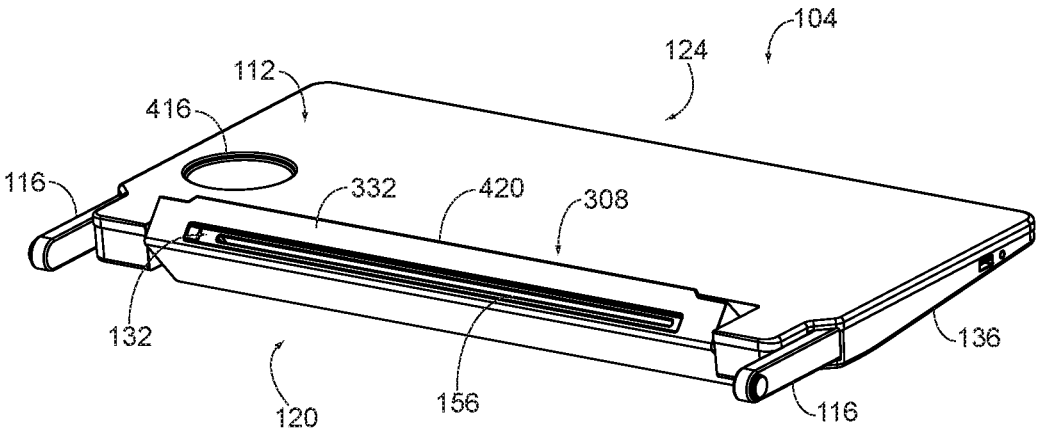
104
124
112
416
116
332
420
308
132
120
156
136
116

FIG. 4H

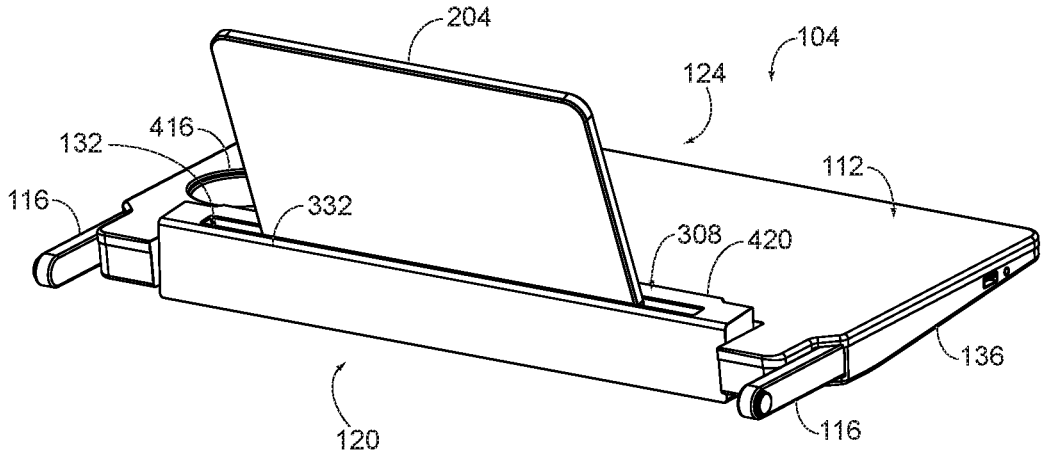
204
104
124
132
416
112
116
332
308
420
136
120
116

FIG. 4I

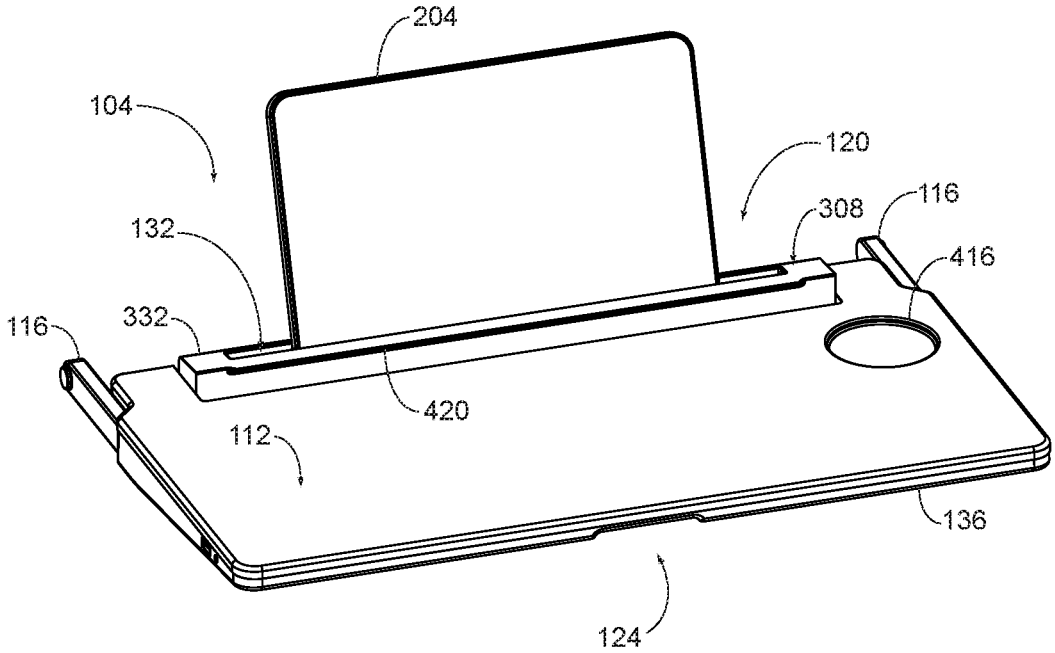
204
104
120
116
308
132
416
332
116
420
112
136
124

FIG. 4J

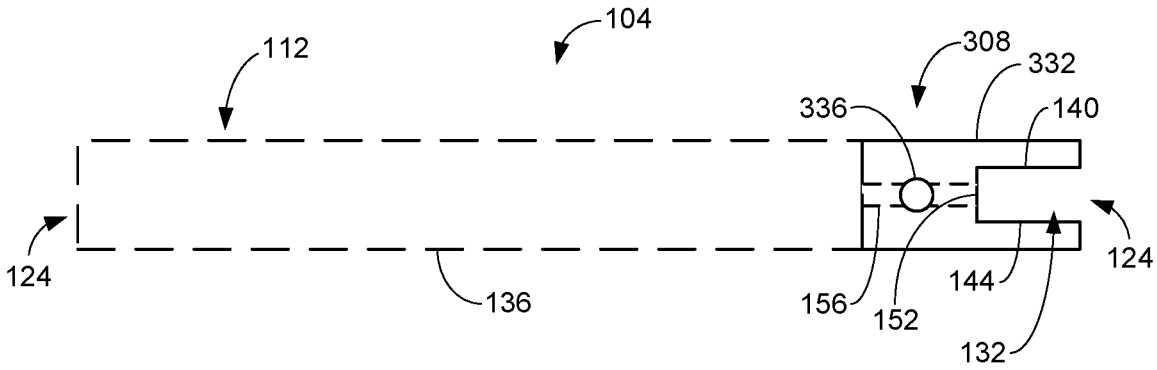

FIG. 4K

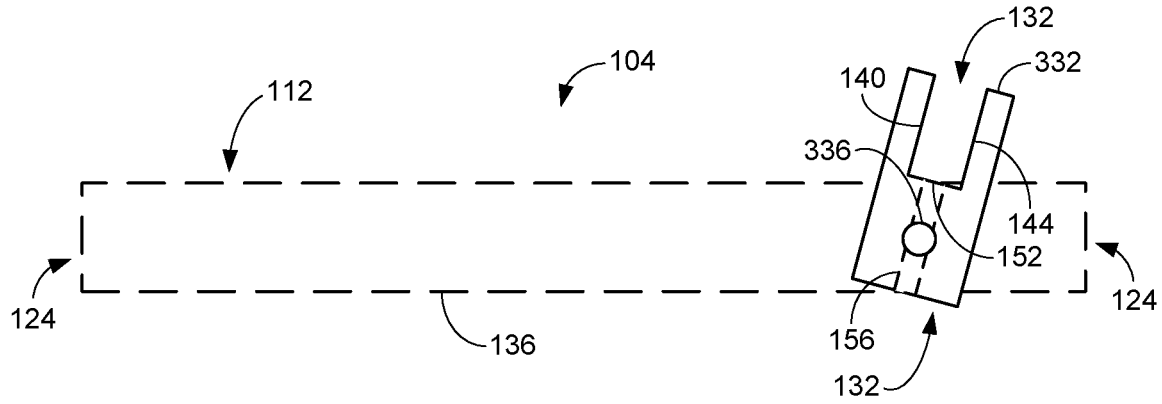

FIG. 4L

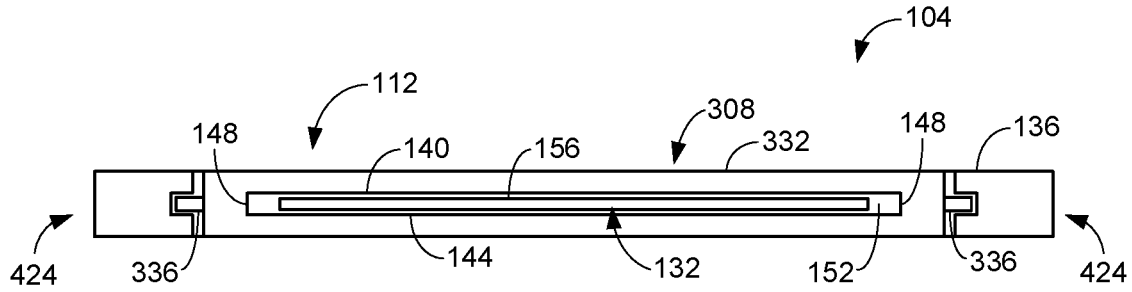

FIG. 5A

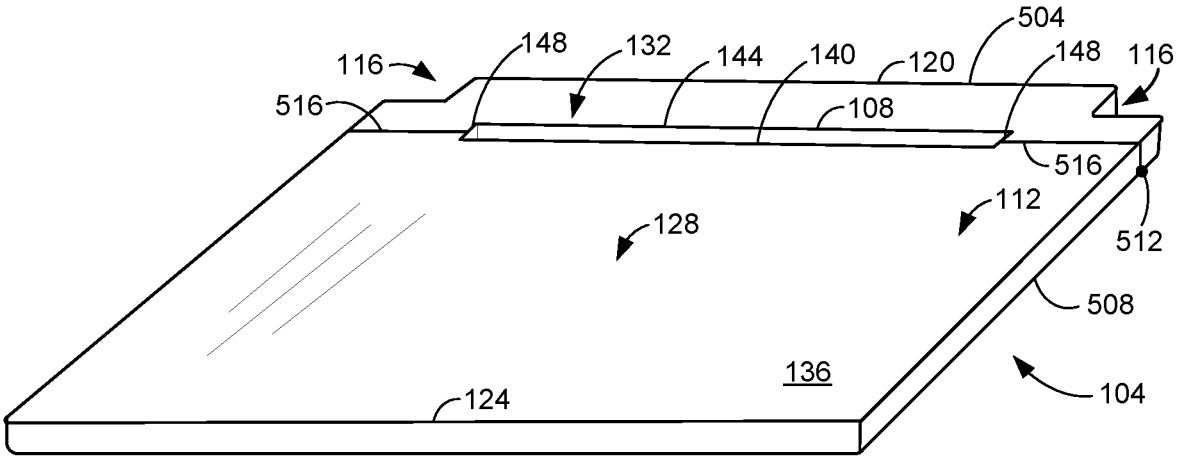
504
116
148
132
144
140
120
148
116
516
108
516
112
128
512
508
136
104
124

FIG. 5B

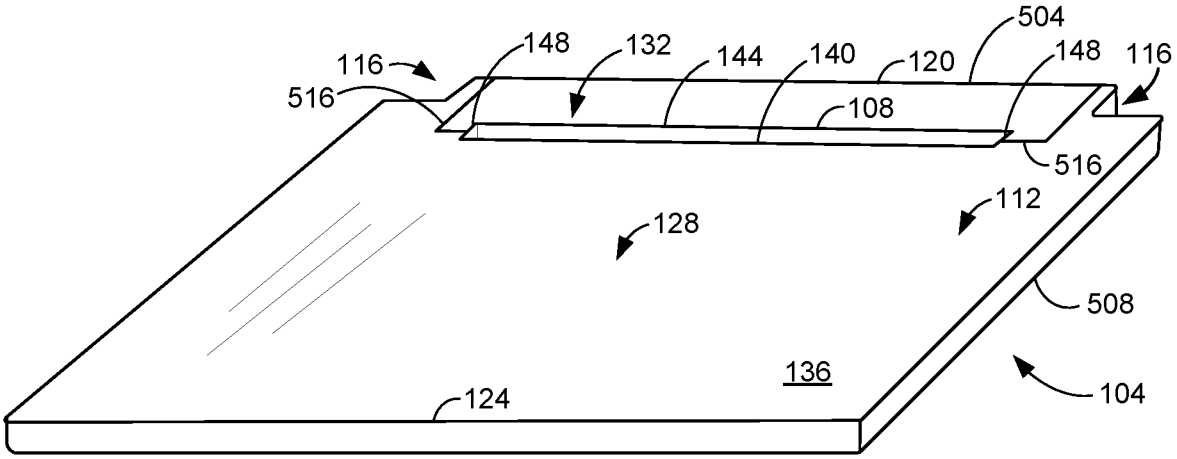
504
116
148
132
144
140
120
148
116
516
108
516
112
128
508
136
104
124

FIG. 5C

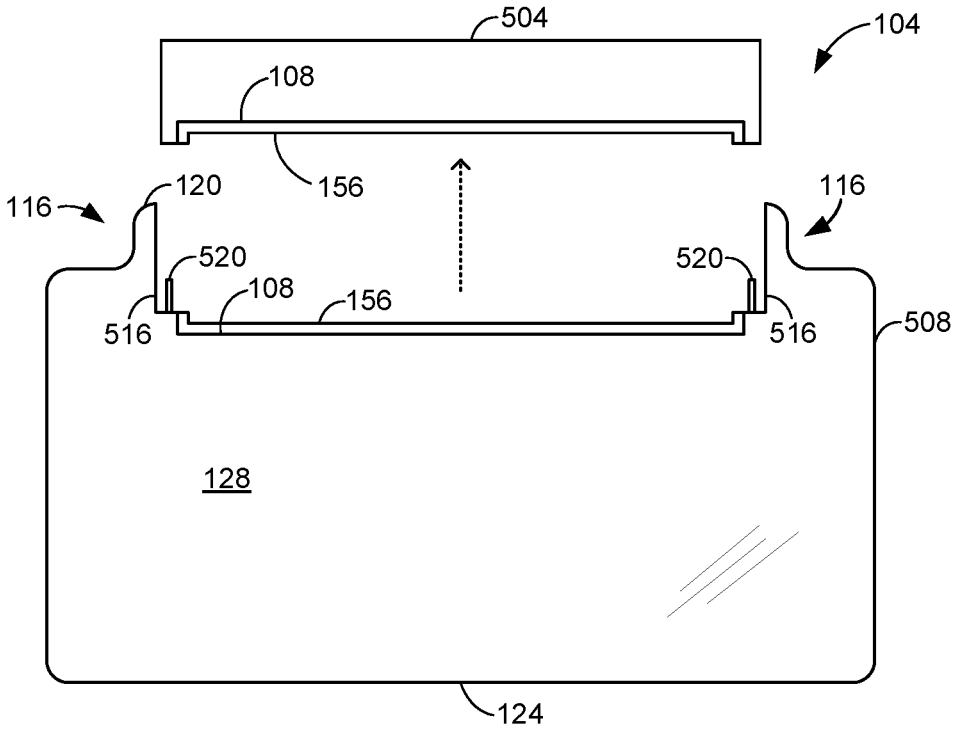

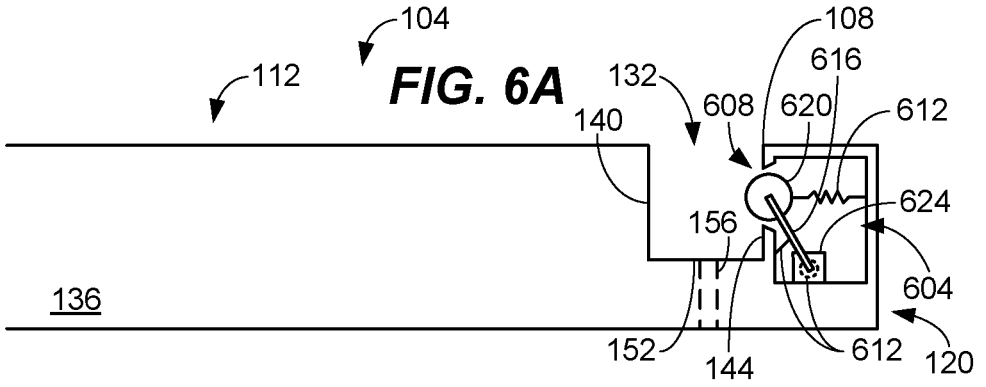

FIG. 6A

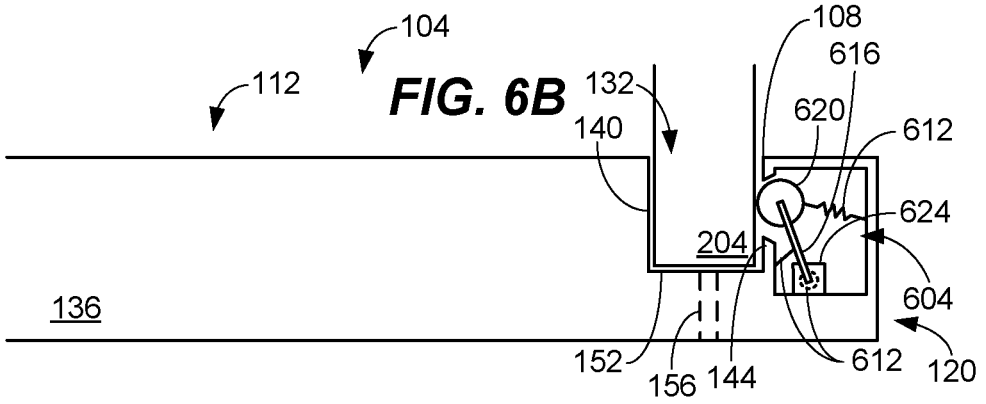

FIG. 6B

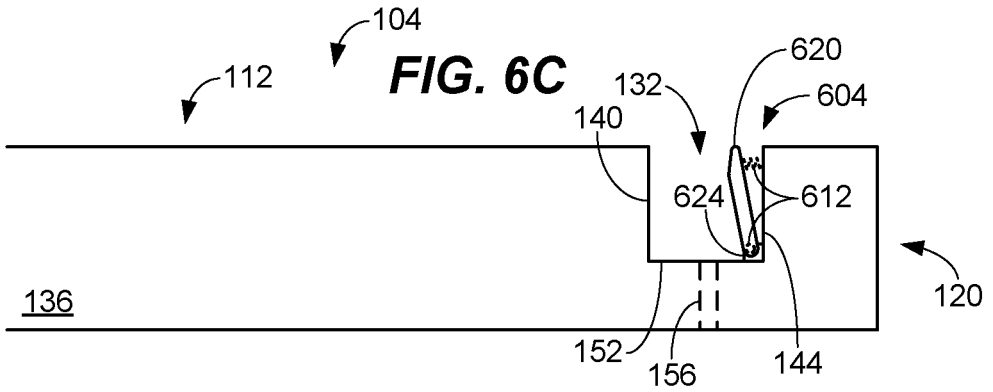

FIG. 6C

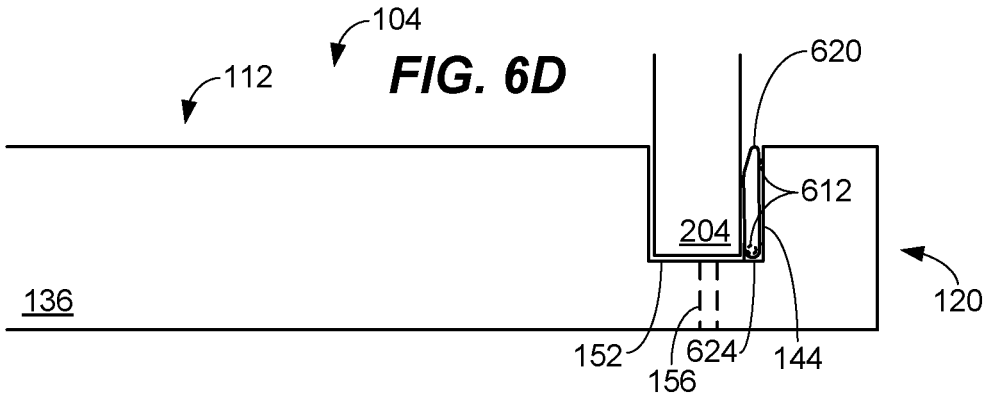

FIG. 6D

FIG. 6E

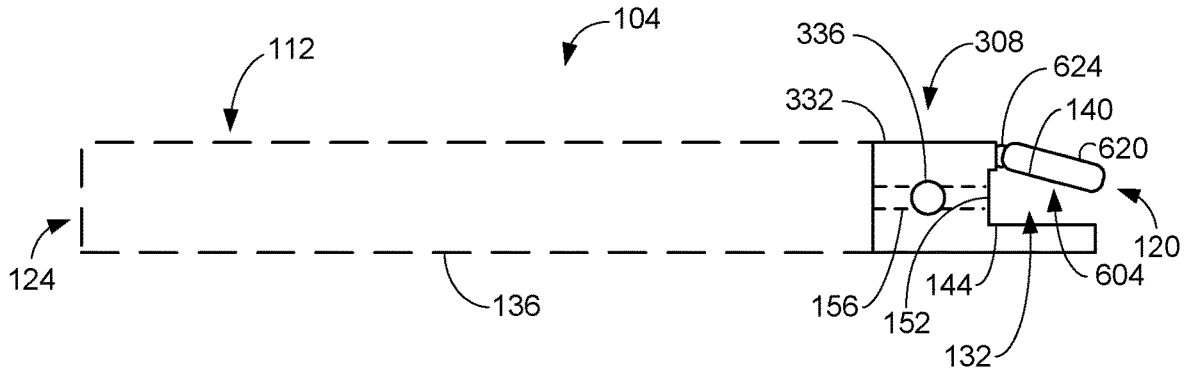
104
112
336
308
624
332
140
620
120
124
136
156
152
144
604
132

FIG. 6F

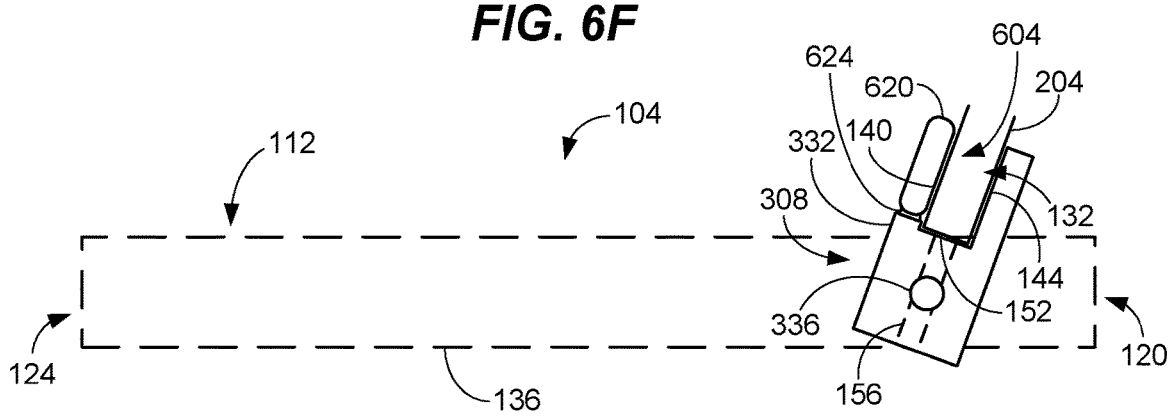
604
624
620
204
104
112
332
140
308
132
144
336
152
120
124
136
156

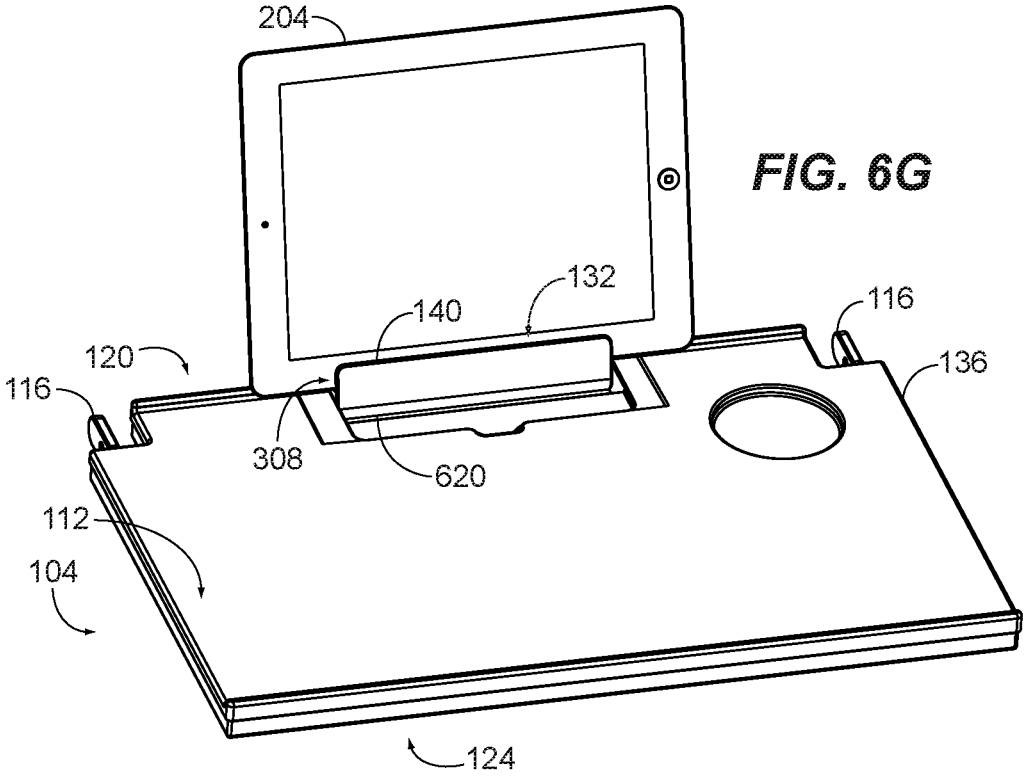

FIG. 6G

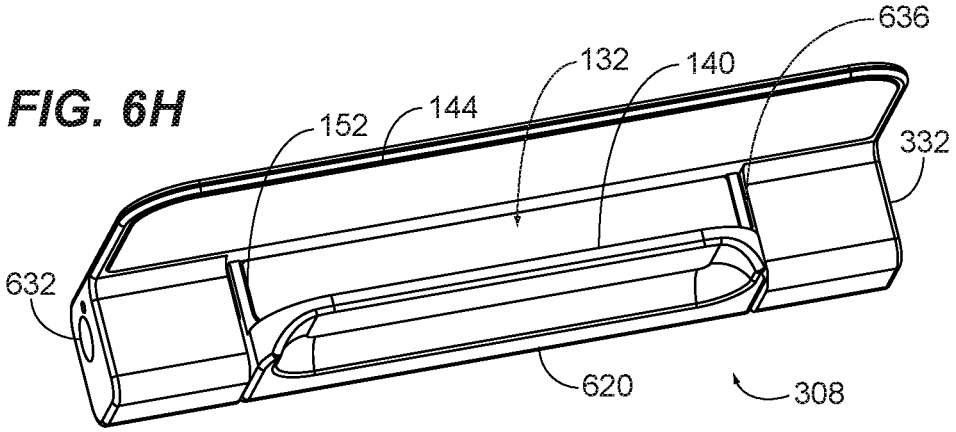

FIG. 6H

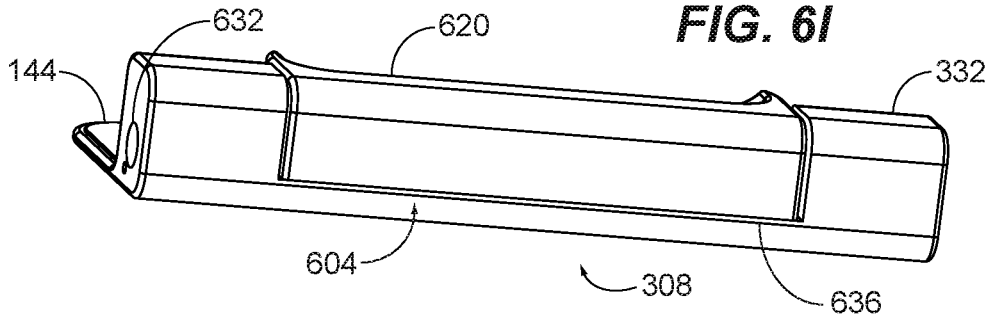

FIG. 6I

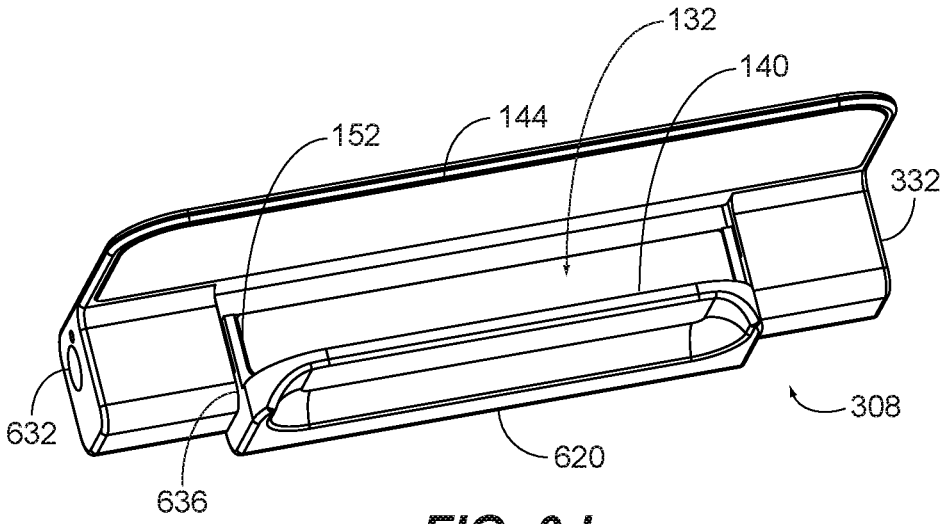
132
140
144
152
332
632
308
620
636

FIG. 6J

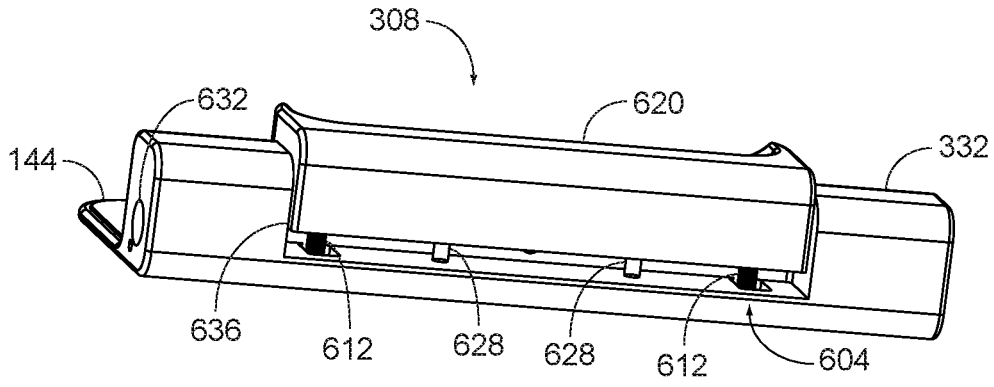
308
632
620
144
332
636
612
628
628
612
604

FIG. 6K

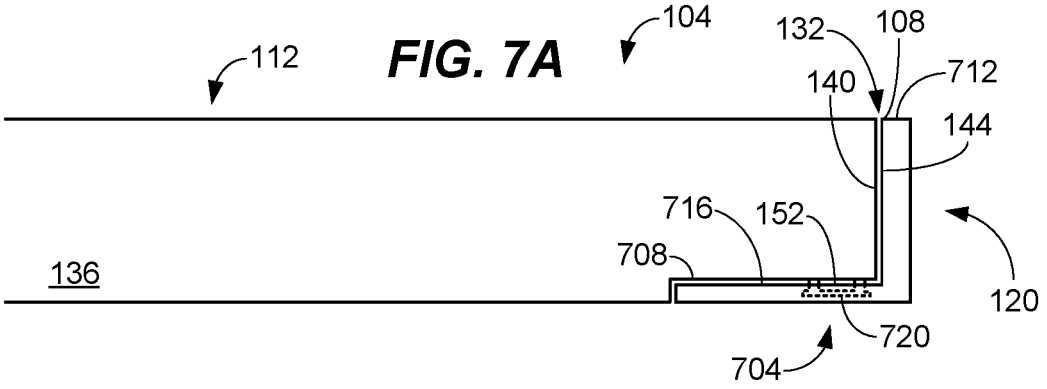

FIG. 7A

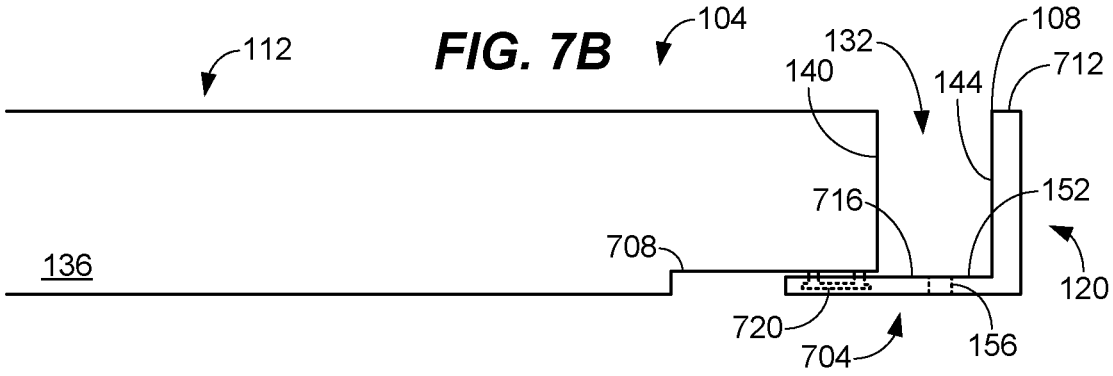

FIG. 7B

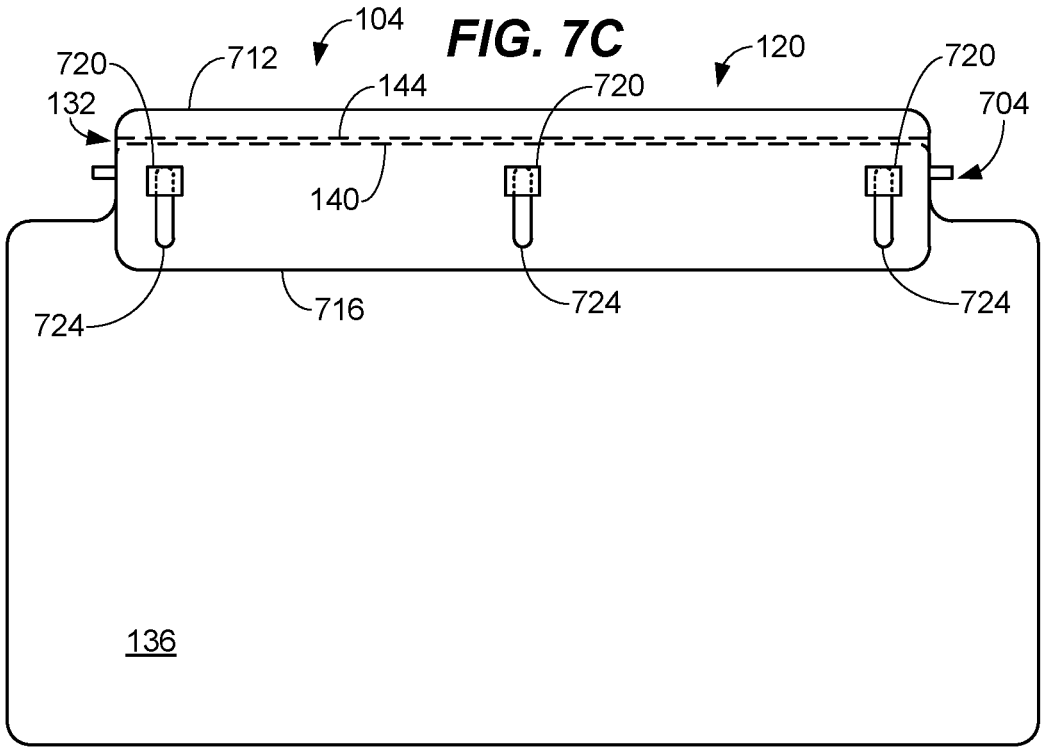

FIG. 7C

FIG. 7D

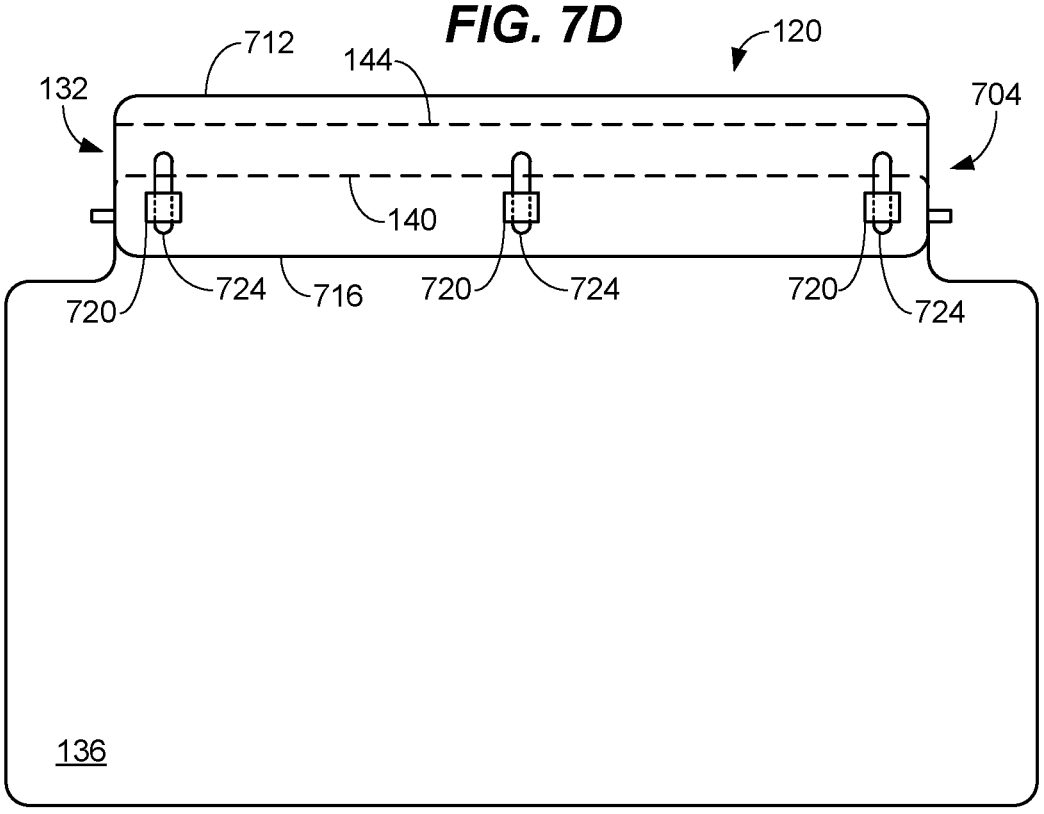

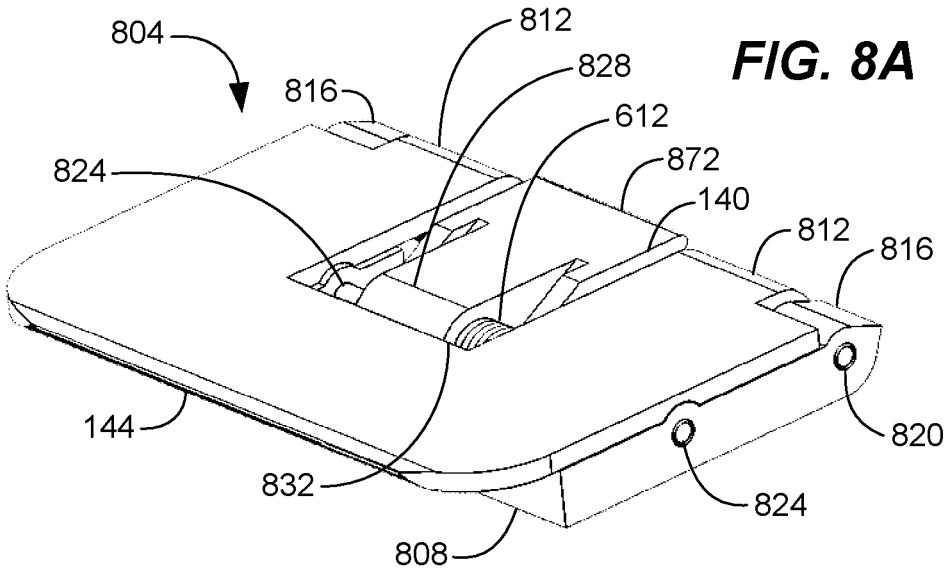
804
812
828
816
612
872
824
140
812
816
820
144
832
824
808

FIG. 8A

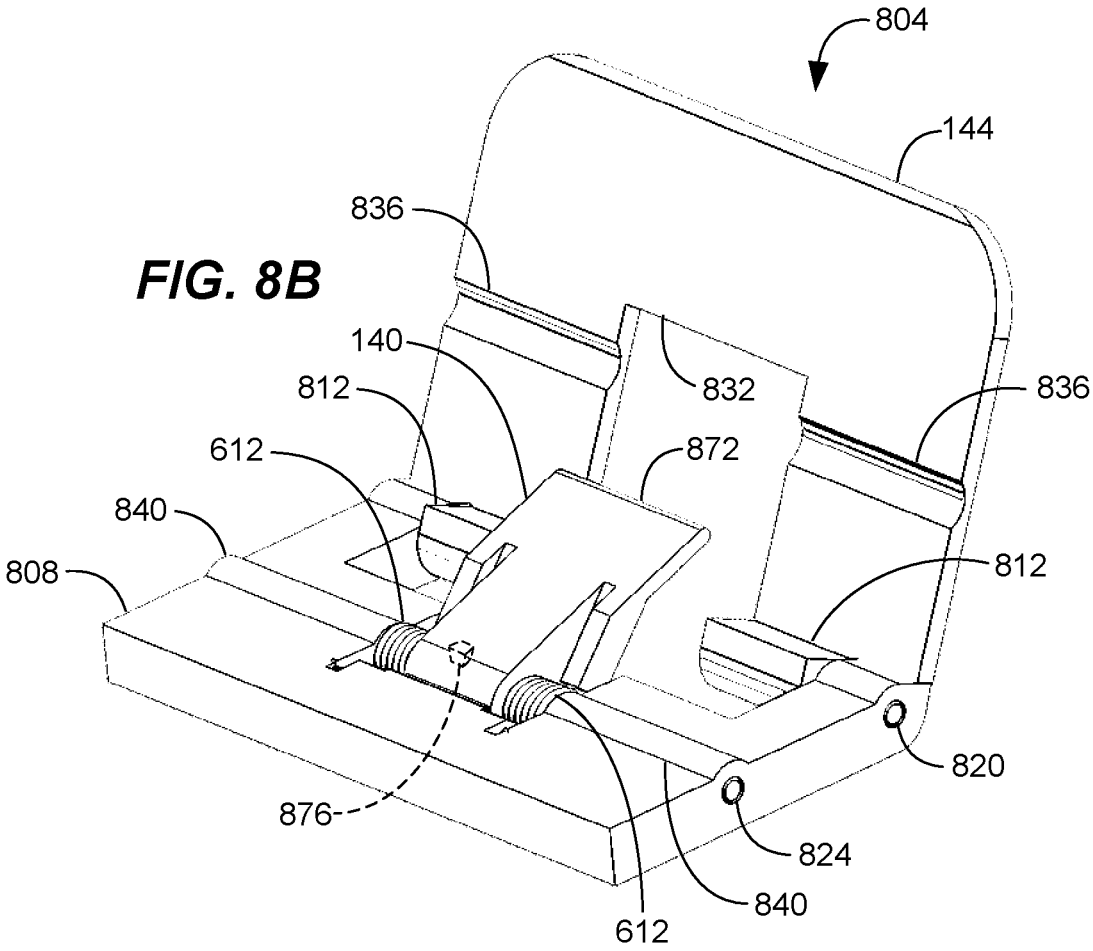
804
144
836
140
832
836
812
612
872
840
812
808
820
876
824
840
612

FIG. 8B

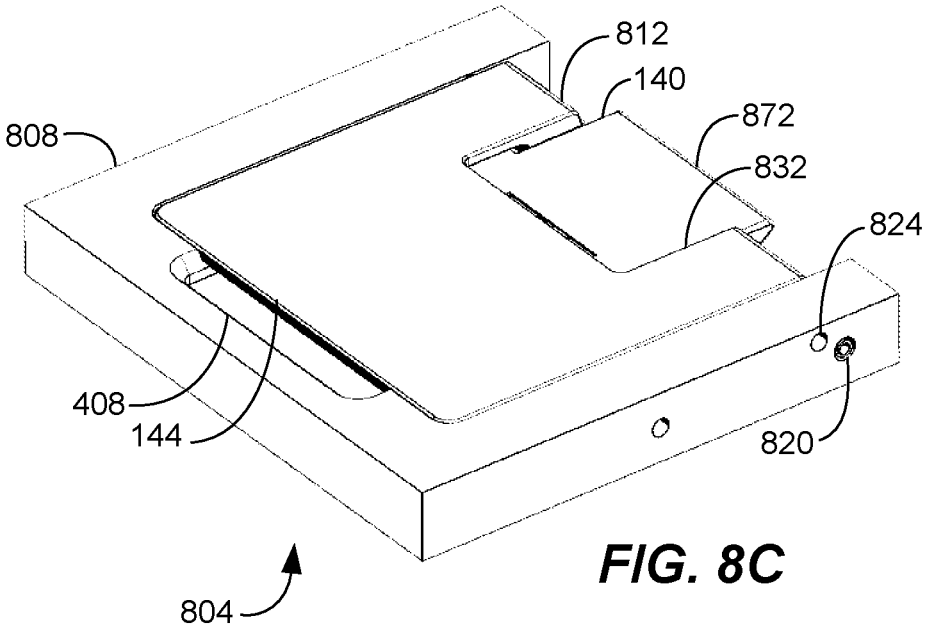
812
140
872
808
832
824
408
144
820
804

FIG. 8C

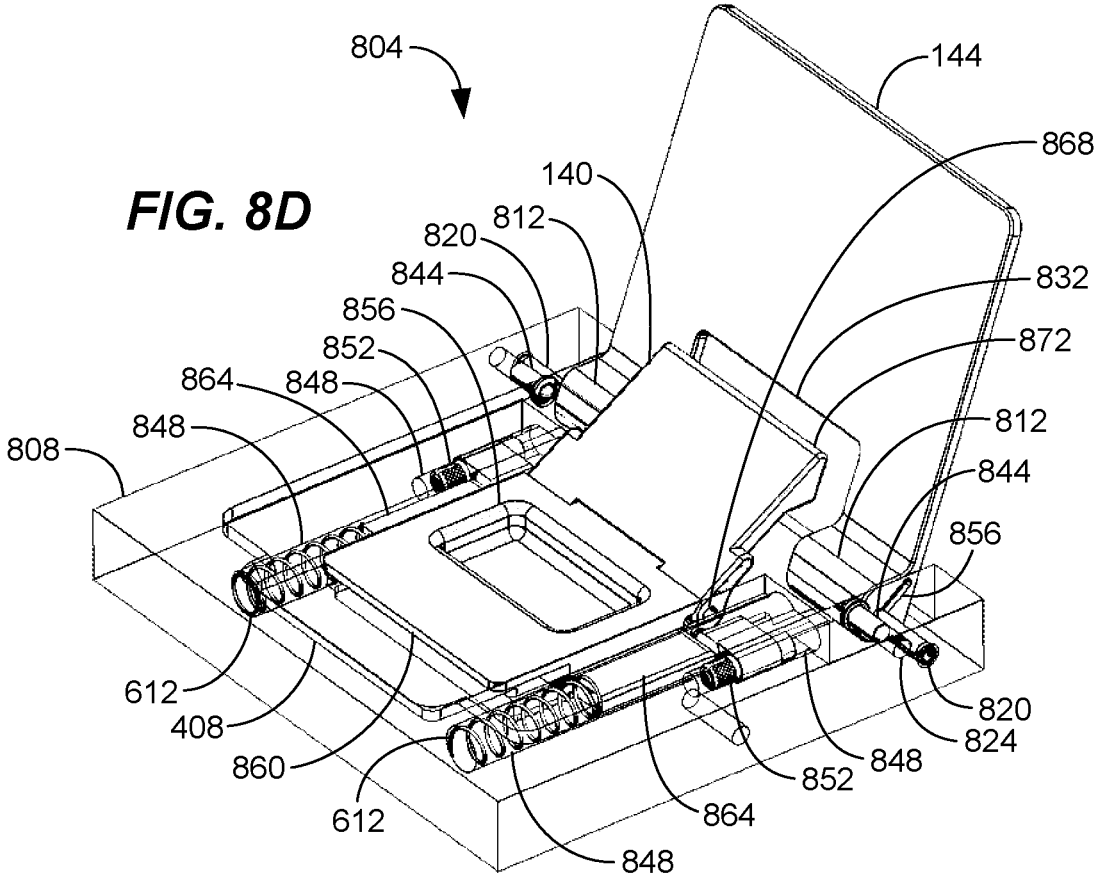
804
144
868
140
812
820
832
844
856
872
852
864
848
812
848
808
844
856
612
820
408
824
860
852
848
612
864
848

FIG. 8D

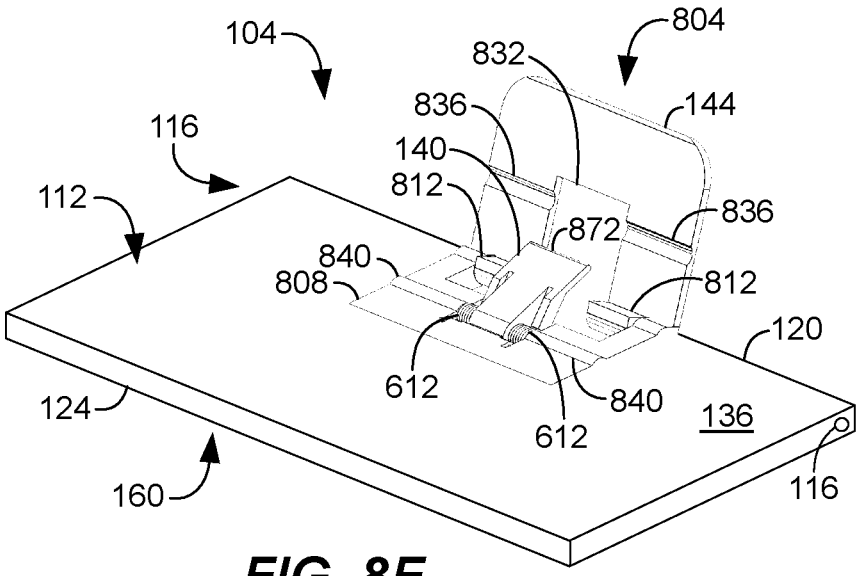
104
804
832
836
144
116
140
812
112
872
836
840
808
812
120
612
840
124
612
136
160
116

FIG. 8E

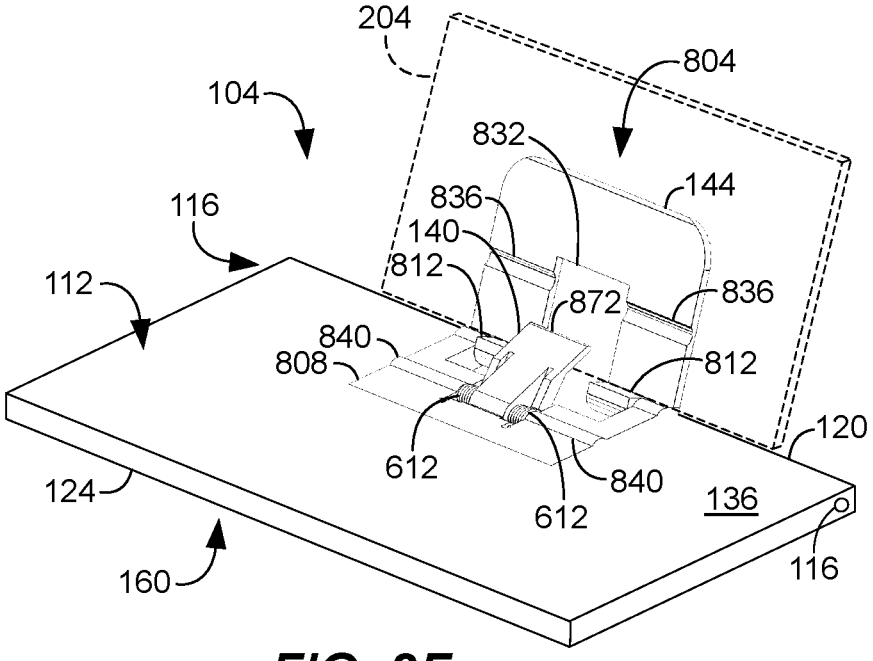
204
804
104
832
144
836
116
140
812
112
872
836
840
808
812
120
612
840
124
612
136
160
116

FIG. 8F

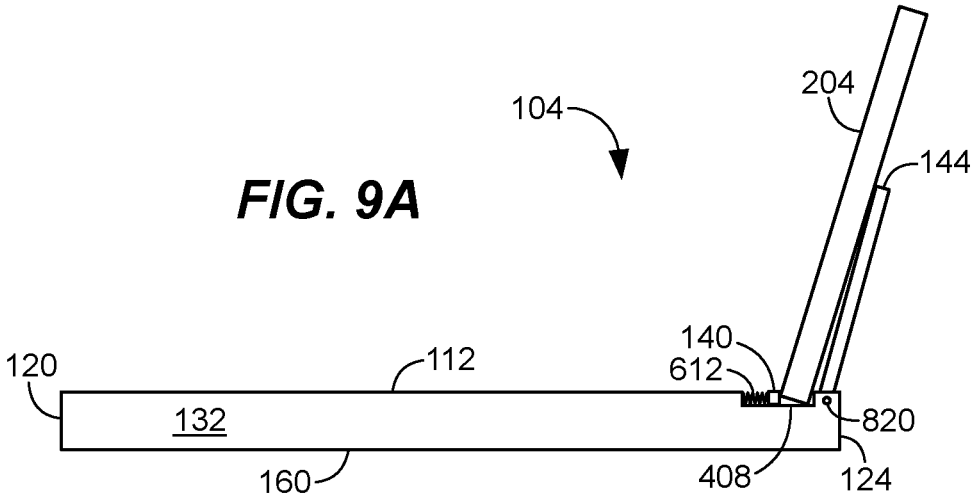

FIG. 9A

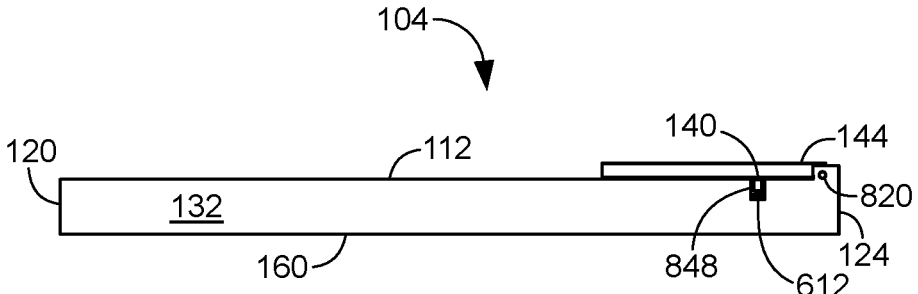

FIG. 9B

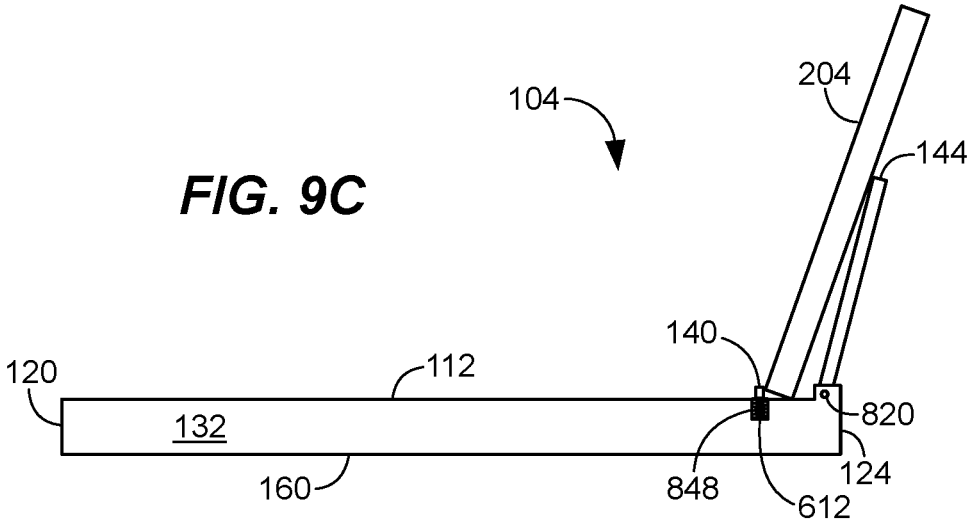

FIG. 9C

ELECTRONIC DEVICE HOLDING ASSEMBLY FOR VEHICLES

CROSS-REFERENCE TO RELATED APPLICATIONS

[0001] This application is a continuation of Ser. No. 15/791,692, filed Oct. 24, 2017, which is a continuation of Ser. No. 15/445,754, filed Feb. 28, 2017, which is a continuation-in-part of U.S. patent application Ser. No. 14/753,264, filed Jun. 29, 2015, which is a continuation of U.S. patent application Ser. No. 14/541,044, filed Nov. 13, 2014, now U.S. Pat. No. 9,067,682, which is a continuation-in-part of U.S. patent application Ser. No. 14/203,547, filed Mar. 10, 2014, now U.S. Pat. No. 9,168,876, which is a continuation-in-part of U.S. patent application Ser. No. 13/644,382, filed Oct. 4, 2012, now U.S. Pat. No. 8,667,904, which claims priority of U.S. Provisional Patent Application Ser. No. 61/641,098, filed May 1, 2012 and to U.S. Provisional Patent Application No. 61/546,969 filed Oct. 13, 2011.

BACKGROUND OF THE INVENTION

Field of the Invention

[0002] The invention relates to vehicular entertainment, and in particular to an electronic device support for vehicles.

Related Art

[0003] Airplane tray tables have been largely unchanged for decades. In general, such tray tables move between a stowed upright position and a service position where a tray table is generally horizontal so that items may be supported by the tray table. In the service position, the tray table may be used to support food, drink, and other items for a passenger. Though positioned directly in reach of a passenger, traditional tray tables are limited to such functionality.

[0004] From the discussion that follows, it will become apparent that the present invention addresses the deficiencies associated with the prior art while providing numerous additional advantages and benefits not contemplated or possible with prior art constructions.

SUMMARY OF THE INVENTION

[0005] A holding assembly for holding portable electronic devices is disclosed herein. As will be detailed herein, the holding assembly allows passengers to easily secure portable electronic devices within a vehicle.

[0006] Various embodiments of a holding assembly are disclosed herein. For instance, in one exemplary embodiment a holding assembly for holding a portable electronic device in a vehicle is disclosed.

[0007] In this embodiment, the holding assembly comprises a base having a first portion and a second portion, a first planar member at the first portion and movable between a first position and second position, and a second planar member at the second portion and movable between a first position and a second position.

[0008] A protrusion is at a distal end of the second planar member for engaging the portable electronic device. The first planar member and the second planar member are independently movable. It is noted that the holding assembly may be mounted to a vehicle seat.

[0009] In another exemplary embodiment, a holding assembly comprises a base having a first portion and a second portion, a first planar member at the first portion and movable between a first position and a second position, and a second planar member at the second portion and movable between a first position and a second position.

[0010] The first planar member and the second planar member are independently movable. It is noted that a protrusion may be at a distal end of the second planar member. In addition, the holding assembly may be mounted to a vehicle seat.

[0011] Various methods relating to a holding assembly are also disclosed herein. For instance, in one exemplary embodiment, a method for supporting a portable electronic device in a vehicle is disclosed. In this embodiment, the method comprises providing a holding assembly comprising a first planar member and a second planar member, engaging the portable electronic device with the first planar member and the second planar member, and holding the portable electronic device at an upright position using at least one of the first planar member and the second planar member.

[0012] The first planar member and the second planar member are independently movable. It is noted that the second planar member may comprise a protrusion at a distal end of the second planar member. In addition, the method may include mounting the holding assembly to a vehicle seat.

[0013] Other systems, methods, features and advantages of the invention will be or will become apparent to one with skill in the art upon examination of the following figures and detailed description. It is intended that all such additional systems, methods, features and advantages be included within this description, be within the scope of the invention, and be protected by the accompanying claims.

BRIEF DESCRIPTION OF THE DRAWINGS

[0014] The components in the figures are not necessarily to scale, emphasis instead being placed upon illustrating the principles of the invention. In the figures, like reference numerals designate corresponding parts throughout the different views.

[0015] FIG. **1**A is a top perspective view of an exemplary tray table with support;

[0016] FIG. **1**B is a cross-sectional view of an exemplary tray table with support;

[0017] FIG. **1**C is a cross-sectional view of an exemplary tray table with support;

[0018] FIG. **1**D is a cross-sectional view of an exemplary tray table with support;

[0019] FIG. **1**E is a bottom view of an exemplary tray table with support;

[0020] FIG. **1**F is a bottom view of an exemplary tray table with support;

[0021] FIG. **2** is a perspective view of an exemplary tray table in operation;

[0022] FIG. **3**A is a top perspective view of an exemplary tray table with rotatable support;

[0023] FIG. **3**B is a cross-sectional view of an exemplary tray table with rotatable support;

[0024] FIG. **3**C is a cross-sectional view of an exemplary tray table with rotatable support;

[0025] FIG. **4**A is a cross-sectional view of an exemplary tray table with rotatable support in operation;

[0026] FIG. **4**B is a cross-sectional view of an exemplary tray table with rotatable support in operation; and

[0027] FIG. **4**C is a cross-sectional view of an exemplary tray table with rotatable support in operation;
[0028] FIG. **4**D is a cross-sectional view of an exemplary tray table with rotatable support in operation;
[0029] FIG. **4**E is a top view of an exemplary tray table with rotatable support in operation;
[0030] FIG. **4**F is a back perspective view of an exemplary tray table with rotatable support. in a closed position;
[0031] FIG. **4**G is a back perspective view of an exemplary tray table with rotatable support in an intermediate position;
[0032] FIG. **4**H is a back perspective view of an exemplary tray table with rotatable support in an open position;
[0033] FIG. **4**I is a front perspective view of an exemplary tray table with rotatable support in an open position;
[0034] FIG. **4**J is a side cross-sectional view of an exemplary tray table with rotatable support in operation;
[0035] FIG. **4**K is a side cross-sectional view of an exemplary tray table with rotatable support in operation;
[0036] FIG. **4**L is a back cross-sectional view of an exemplary tray table with rotatable support in operation;
[0037] FIG. **5**A is a top perspective view of an exemplary tray table with support having separable portions;
[0038] FIG. **5**B is a top perspective view of an exemplary tray table with support having separable portions;
[0039] FIG. **5**C is a top view of an exemplary tray table with support having separable portions in use;
[0040] FIG. **6**A is a cross-sectional view of an exemplary tray table with support having a biasing mechanism;
[0041] FIG. **6**B is a cross-sectional view of an exemplary tray table with support having a biasing mechanism;
[0042] FIG. **6**C is a cross-sectional view of an exemplary tray table with support having a biasing mechanism;
[0043] FIG. **6**D is a cross-sectional view of an exemplary tray table with support having a biasing mechanism;
[0044] FIG. **6**E is a cross-sectional view of an exemplary tray table with rotatable support having a biasing mechanism;
[0045] FIG. **6**F is a cross-sectional view of an exemplary tray table with rotatable support having a biasing mechanism;
[0046] FIG. **6**G is a perspective view of an exemplary tray table with rotatable support having a biasing mechanism;
[0047] FIG. **6**H is a top perspective view of an exemplary rotatable support having a biasing mechanism;
[0048] FIG. **6**I is a bottom perspective view of an exemplary rotatable support having a biasing mechanism;
[0049] FIG. **6**J is a top perspective view of an exemplary rotatable support having a biasing mechanism;
[0050] FIG. **6**K is a bottom perspective view of an exemplary rotatable support having a biasing mechanism;
[0051] FIG. **7**A is a cross-sectional view of an exemplary tray table with support having a collapsible slot;
[0052] FIG. **7**B is a cross-sectional view of an exemplary tray table with support having a collapsible slot;
[0053] FIG. **7**C is a bottom view of an exemplary tray table with support having a collapsible slot;
[0054] FIG. **7**D is a bottom view of an exemplary tray table with support having a collapsible slot;
[0055] FIG. **8**A is a perspective view of an exemplary holding assembly in a closed state;
[0056] FIG. **8**B is a perspective view of an exemplary holding assembly in an open state;
[0057] FIG. **8**C is a perspective view of an exemplary holding assembly in a closed state;
[0058] FIG. **8**D is a perspective view of an exemplary holding assembly in an open state;
[0059] FIG. **8**E is a perspective view of an exemplary tray table;
[0060] FIG. **8**F is a perspective view of an exemplary tray table in operation;
[0061] FIG. **9**A is a side view of an exemplary tray table in operation;
[0062] FIG. **9**B is a side view of an exemplary tray table; and
[0063] FIG. **9**C is a side view of an exemplary tray table in operation.

DETAILED DESCRIPTION OF THE INVENTION

[0064] In the following description, numerous specific details are set forth in order to provide a more thorough description of the present invention. It will be apparent, however, to one skilled in the art, that the present invention may be practiced without these specific details. In other instances, well-known features have not been described in detail so as not to obscure the invention.
[0065] In general, the tray table herein provides a versatile support for one or more portable electronic devices. As will be described further below, the tray table may be configured to hold portable electronic devices of various shapes and sizes. This is advantageous in that it allows passengers to enjoy use of their personal electronic devices during a flight or other vehicular travel. For example, passengers may access and enjoy various media or other entertainment via their electronic devices during a flight, road trip, cruise, or bus or train ride. Using the tray table, passengers avoid having to hold, prop up, or otherwise secure their electronic devices in unorthodox ways, such as by leaning the devices against various surfaces at their seats. In addition, the tray table increases passenger comfort by holding portable electronic devices in an ergonomic position. In some embodiments, as will be described further below, the tray table's support may be rotatable or movable to allow adjustments to the position of a portable electronic device.
[0066] Figure **1**A provides a top perspective view of an exemplary tray table **104** having a support **108** for portable electronic devices. As can be seen, the tray table **104** provides a planar top surface **112** that passengers may place their various items on. The tray table **104** may also include one or more mounting points **116** or mounts that allow it to be installed in an aircraft, such as on a back portion an aircraft passenger seat. In typical embodiments, the tray table **104** will mount to the rotatable tray table support arms of aircraft passenger seats. Mounting points may be at or near a back end **120** of the tray table **104**. The mounting points **116** will typically allow the tray table **104** to rotate or otherwise move so as to allow the tray table to be moved between a stowed position (where it is secured to a seat back) and a service position (where it is substantially horizontal to support items on its top surface).
[0067] As can also be seen, the support **108** may be positioned at the back end **120** of the tray table **104**. This allows the portion of the top surface **112** in front of the support **108** to be used even when the support **108** is in use. It is contemplated that the support **108** may be located at different locations as well. For instance, the support **108** may

be near a front end **124** of the tray table **104**, at a central portion **128**, or elsewhere. Typically, the support **108** will extend laterally across the tray table **104** parallel to the back edge of the tray table, however it is contemplated that the support **108** may be angled slightly in some embodiments.

[0068] In one or more embodiments, the support **108** may be an excavated portion of the tray table **104** configured to accept a portable electronic device. For instance, the support **108** may be a cavity **132** formed in the body **136** of the tray table **104** for instance. For example, the cavity **132** may be a slot or groove. The cavity **132** may comprise a front wall **140** and a back wall **144**, and one or more sidewalls **148**.

[0069] It is noted that the tray table **104** may include one or more magnets **164** at or near its top surface **112** to hold a portable electronic device on the top surface. In operation, the magnets **164** would be attracted to a magnetic structure within the portable electronic device, thus holding the portable electronic device. Though shown at particular locations in FIG. **1**A, it is contemplated that the magnets **164** may be at various locations of the tray table **104**. In addition, fewer or additional magnets **164** may be provided in one or more embodiments.

[0070] FIGS. **1**B-**1**C provide cross-sectional views of the tray table **104** and support **108**. FIG. **1**B is a cross-sectional view across Line **1**, while FIG. **1**C is a cross-sectional view across Line **2**. As can be seen, the cavity **132** may have a bottom **152** to provide support to a portable electronic device thus preventing the device from sliding out of the support **108** through its bottom. It is noted that the bottom **152** may have one or more openings **156** to allow ventilation and to allow any spilled liquids or other debris to fall out of the support **108**. This aids in keeping the support clean.

[0071] It is contemplated that the support **108** may be configured to provide connectivity to any device it is holding. For instance, in one embodiment, the support **108** may optionally include an electrical, optical, or other connectors **168** to provide power or data connections from a power or data source to a portable electronic device. If a connector **168** is provided, it is contemplated that one or more magnets may optionally be used to secure a connector **168** to a portable electronic device. In some embodiments, the support **108** may provide wireless connectivity for power transmission or data connections. For example, the support **108** may provide inductive battery charging or a short-range data connection (such as a BLUETOOTH connection) to portable electronic devices via one or more coils **176** or antennas. The tray table **104** may contain its own power source, such as one or more batteries **180**, and/or may be connected to an aircraft's power system. The batteries may be rechargeable. In one or more embodiments, the batteries may be held in a compartment within the tray table **104** and be removable therefrom, such as for replacement, recharging, or both.

[0072] FIG. **1**D illustrates a cross-sectional view of an additional embodiment of the support **108**. As can be seen, the cavity **132** may be "L" shaped thus providing a bottom **152** to support a portable electronic device. The lower portion of the "L" shape terminates at an opening near the back end of the tray table **104**. This is advantageous in that it causes any fluids (or other dirt/debris) to flow toward the back of the tray table. In the event of a spill, such fluids would exit the tray table **104** away from the passenger as much as possible. It is noted that rather than forming the entire cavity **132** into an "L" shape, one or more channels/openings, could form the bottom of the "L" shape and guide fluids (or other dirt/ and debris) toward the back of the tray table.

[0073] It is contemplated that a removable liner may be provided in some embodiments to aid in keeping the support clean. The liner may conform to the cavity **132** and may be removed and replaced with a new liner when dirty. Alternatively or in addition, a plug, cap or other or covering may be provided to fill the cavity **132** to prevent dirt or debris from entering the support **108**. Typically, the plug or cover would have a planar top positioned flush with the top surface **112** of the tray table **104**, when inserted into the cavity **132**. It is contemplated that the plug or cover may be affixed to the cavity **132** in some embodiments. For instance, the plug or cover may be a spring loaded or other biased mechanism that may be depressed downward to provide access to the cavity **132**, thereby allowing an electronic device **204** to be inserted into the support **108**. When not depressed, the biasing mechanism would raise the plug or cover such that it is flush with the top surface **112** of the tray table.

[0074] Referring to FIG. **1**B, the support **108** may be angled in one or more embodiments. For instance, the support **108** may have a back wall **144** and/or front wall **140** that is at a non-perpendicular angle to the top surface **112** or body **136** of the tray table. As will be described further below, this allows the support **108** to hold a portable electronic device at an angle, which causes the device to face a seated passenger for ideal viewing. In one or more embodiments, the support **108** will be angled rearward towards the back end or edge of the tray table **104** to accomplish this.

[0075] It is contemplated that the cavity **132** may have various other cross-sectional shapes as well. For example, the front wall **140** and back wall **144** may form a "V" or other shape that tapers from the top surface **112** of the tray table **104**. This allows portable electronic devices of various thicknesses to be inserted into and securely held by the cavity **132**. Alternatively or in addition, the cavity **132** may have a stepped cross section to produce a set of discrete widths between the front wall **140** and back wall **144**. In other words, the front wall **140** and/or back wall **144** may be shaped like steps. This also allows portable electronic devices of various thicknesses to be supported by the cavity **132**.

[0076] Figure **1**E is a bottom view of the tray table **104** showing the opening **156**, which allows dirt and debris to exit the support **108**. As can be seen, the opening **156** extends to the bottom surface **160** of the tray table **104** so that dirt and debris can fall out of the tray table **104**. The opening **156** will typically be smaller than the cavity **132** so that an electronic device may be supported therein without falling through the opening. For example, the opening **156** may have a smaller width and/or length than the support **108**. Though shown as a single opening **156** in FIG. **1**E, it is contemplated that a plurality of openings may be used.

[0077] In addition, an opening **156** may be formed in various shapes and sizes. For example, an opening may have a length of 1-2 inches in some embodiments. This is advantageous in that such opening **156** is large enough to allow dirt and debris to escape while not being so large as to result in a smaller electronic device (such as a phone or other handheld device) to fall through the opening. In one or

more embodiments, the bottom **152** of the support **108** may slant towards the opening **156** so as to guide dirt and debris toward the opening.

[0078] In one or more embodiments, the body **136** may be constructed to aid in cleaning the tray table **104**. For example, the body **136** or portions thereof may be formed from material having anti-microbial or anti-bacterial qualities. In some embodiments, the body **136** or portions thereof may be coated with such materials. It is noted that only portions of the tray table **104**, such as the top surface **112** may be formed from or coated with anti-microbial and/or anti-bacterial materials.

[0079] It is contemplated that a removable liner may be provided in some embodiments to aid in keeping the support clean. The liner may conform to the cavity **132** and may be removed and replaced with a new liner when dirty. Alternatively or in addition, a cover **172**, cap or other or covering may be provided to fill the cavity **132** to prevent dirt or debris from entering the support **108**. Typically, the cover **172** would have a planar top positioned flush with the top surface **112** of the tray table **104**, when inserted into the cavity **132**, such as shown in FIG. **1**F. Figure **1**F is a top view of an exemplary tray table **104** having a support **108**. It is contemplated that the cover **172** may be affixed to the cavity **132** in some embodiments. For instance, the cover **172** may be a spring loaded or other biased mechanism that may be depressed downward to provide access to the cavity **132**, thereby allowing an electronic device **204** to be inserted into the support **108**. When not depressed, the biasing mechanism would raise the cover **172** such that it is flush with the top surface **112** of the tray table.

[0080] FIG. **2** illustrates an exemplary tray table **104** having a portable electronic device **204** installed therein. As can be seen, the portable electronic device **204** may be held by the support **108** at a reclined angle, such as described above. It is contemplated that the support **108** may have a length selected to accommodate a variety of portable electronic devices. For instance, as can be seen from FIG. **2**, the support **108** may accept a tablet device but also is sized to allow smaller devices, such as portable media players, smart phones, and portable gaming machines, to be held.

[0081] It is contemplated that the support **108** may be configured to provide connectivity to any device it is holding. For instance, the support **108** may have electrical, optical, or other terminals to provide power or data connections to a portable electronic device. In some embodiments, the support **108** may provide wireless connectivity to power or data connections. For example, the support **108** may provide inductive battery charging or a short-range data connection (such as a BLUETOOTH connection) to portable electronic devices. The tray table **104** may contain its own power source, such as one or more batteries, and/or may be connected to an aircraft's power system. The batteries may be rechargeable. In one or more embodiments, the batteries may be held in a compartment within the tray table **104** and be removable therefrom, such as for replacement, recharging, or both.

[0082] As disclosed above, the tray table may provide an adjustable support in some embodiments, such as to permit passengers to position their portable electronic devices at various angles. As will now be described with regard to FIGS. **3**A-**3**C, the tray table **104** may include a rotatable assembly to allow such positioning.

[0083] FIG. **3**A provides a top perspective view of the tray table **104**. As can be seen, the outward appearance of an adjustable embodiment, may be similar to that disclosed above. In one or more embodiments, a control device **304** may be provided to allow the position of the support **108** to be changed. As shown, an adjustment wheel is provided as the control device **304**. It is noted that various control devices, such as knobs, levers, sliders, buttons, or the like may be used to move the support **108**. In addition, multiple control devices **304** may be provided. For instance, an adjustment wheel or other control device **304** could be on both sides of the support **108** in some embodiments.

[0084] It is also noted that the support **108** may be biased (such as by one or more springs) in some embodiments. In this manner, the support **108** may be configured to automatically move or rotate to a particular position when a control device **304** is engaged, as will be described further below.

[0085] FIG. **3**B provides a cross-sectional view of the tray table across Line **1** of FIG. **3**A. As can be seen the body **136** of the tray table **104** may be configured to accommodate a rotatable assembly **308**. For example, as shown in the embodiment of FIG. **3**B, a compartment **312** comprising a curved front and back wall **316**, **320** configured to accept the rotatable assembly **308** while allowing the rotatable assembly to rotate or move within the compartment is provided. The compartment **312** may include a bottom **324** to enclose the rotatable assembly **308**. An optional bottom **324** may be provided in some embodiments. It is noted that without a bottom **324**, any dirt or debris that collects in the rotatable assembly **308** can be removed by rotating the assembly such that such debris can fall out of the assembly. Alternatively, and opening **156** may be formed in the bottom **324** of the compartment **312** to allow such dirt and debris to exit the assembly **308**.

[0086] It is contemplated that the compartment **312** may extend from the top surface to the bottom surface of the tray table's body **136** in some embodiments. In this manner, the compartment **312** would have an opening at its top and bottom. This allows electronic devices to be received in the cavity **132** via the top opening of the compartment **312** while also allowing dirt and debris to exit the assembly via the bottom opening of the compartment. The body **332** of the rotatable assembly **308** may be sized to protrude from both the top and bottom opening of the compartment **312**. In this manner, the body **332** itself forms a seal with the compartment **312** thereby preventing dirt and debris from entering the assembly **308**.

[0087] The rotatable assembly **308** may comprise a body **332** having a cavity **132** therein to accept a portable electronic device. Similar to above, the cavity **132** may comprise a front wall **140**, a back wall **144**, and one or more sidewalls **148**. A bottom **152** may be provided to prevent a portable electronic device from falling out of the cavity **132**, such as described above. As can be seen, the cavity **132** may be angled to hold a portable electronic device at an angled position, such as described above. It is contemplated that the cavity **132** may be not be angled (i.e., be perpendicular to the axis of rotation) in some embodiments. With the rotatable assembly **308** for instance, a passenger may choose his or her desired angle by rotating the rotatable assembly. Thus, the cavity **132** itself may but need not be angled in all embodiments.

[0088] The body **332** or portion thereof of the rotatable assembly **308** may be rounded or cylindrical in one or more embodiments, such as to allow the rotatable assembly to rotate within the tray table **104**. It is contemplated that the body **332** or portion thereof could have other cross-sectional shapes. For example, the body **332** may be triangular, a pentagon, hexagon, or other shape. In some embodiments, the shape of the body **332** may be used to help hold the body **332** in position after it has been rotated. For example, the shape of the body may cause it to engage other surfaces of the tray table **104** thus holding the body in position.

[0089] One or more holding mechanisms may be used to hold the rotatable assembly **308** in a particular position. For example, a biased braking pad or other surface may press against the rotatable assembly **308** (such as at the body **332**) to prevent the rotatable assembly from rotating out of a desired position. Other holding mechanisms, such as removable locking pins, detents, or the like could be used as well. In addition, it is contemplated that the body **332** may closely conform to its compartment **312** to hold itself in position once rotated to a desired position.

[0090] FIG. **3**C illustrates a cross-sectional view of the tray table **104** across Line **2** of FIG. **3**A. As can be seen, the rotatable assembly **308** may comprise one or more axels **336** upon which its rotation may be accomplished. The axels **336** may extend to engage a portion of the rotatable assembly's compartment **312** to support the rotatable assembly **308** therein.

[0091] As shown in FIG. **3**C, an axel **336** may also be mechanically linked to a control device **304** in one or more embodiments. In this manner, the axel **336** and thus the rotatable assembly **308** may be rotated by manipulating a control device **304**. For example, in FIG. **3**C rotating the control device **304** also rotates the rotatable assembly **308**. It is noted that one or more biasing devices, such as springs, may engage or be attached to an axel **336** as well. This allows the rotatable assembly **308** to automatically move to a particular position when a biasing device is activated. For example, a biasing device may be configured to rotate the cavity **132** of the rotatable assembly **308** such that it is accessible from the top of the tray table **104**. Alternatively, a biasing device could rotate the cavity **132** such that it is inaccessible, thus "closing" the support **108**. This may be desirable to prevent unwanted dirt or debris from entering the cavity **132**, such as during food service on a flight.

[0092] FIGS. **4**A-**4**B illustrate a rotatable assembly **308** in operation. As can be seen, the rotatable assembly **308** may rotate from the open position shown in FIG. **4**A to the closed position shown in FIG. **4**B. In the open position, the cavity **132** of the rotatable assembly **308** is typically accessible, thus allowing one or more portable electronic devices **204** to be supported therein, such as shown in FIG. **4**A.

[0093] When not in use, the rotatable assembly **308** may be rotated to a closed position, such as shown in FIG. **4**B. As can be seen, the cavity **132** may not be accessible when in the closed position. As stated, this prevents dirt or debris from entering the cavity **132**. In embodiments where the tray table's compartment **312** has an open bottom, the rotatable assembly **308** may be rotated to empty any dirt or debris that may have collected therein. It is noted that the compartment **312** may have a removable bottom to allow this cleaning process to occur.

[0094] It is noted that the cavity **132** of the tray table **104** may be configured to protect any portable electronic devices it holds. For example, in one or more embodiments, the cavity **132** or portions thereof may be padded or be coated with non-abrasive surfaces to prevent the cavity from scratching or otherwise damaging the enclosure of a portable electronic device.

[0095] FIGS. **4**C-**4**E illustrate another rotatable assembly **308** in operation. As can be seen, an elongated tab **404** extends from the body **332** of the rotatable assembly. The elongated tab **404** may be an elongated member, planer structure, or the like which extends from the body **332**. In operation, a bottom portion of an electronic device may be placed in the support **108** while an upper portion is propped up against (i.e., held by) the tab **404**. This can be seen from FIG. **4**C, which illustrates the rotatable assembly **308** in an open position.

[0096] FIGS. **4**D-**4**E illustrate the rotatable assembly **308** in a closed position. In one or more embodiments, the body **136** of the tray table **104** may have a recess **408** formed therein to accept the tab **404**. In this manner, when closed, the rotatable assembly's tab **404** is positioned flush with the top surface **112** of the tray table **104**. This prevents the rotatable assembly **308** from obstructing use of the tray table and provides a planar surface for placement of one or more items. In addition, as can be seen from FIGS. **4**D-**4**E, the tab **404** also encloses the compartment **312** preventing dirt and debris from entering. A cutout or recess **412** may be provided to allow the tab **404** to be lifted in some embodiments.

[0097] Though shown in a compartment **312** having a bottom **324**, it is noted that a bottom need not be provided in all embodiments having a rotatable assembly **308**. For instance, as described above, the compartment **312** may have an open bottom to allow dirt and debris to exit the compartment. Alternatively, one or more openings may be formed in the bottom **324**, such as described above with regard to FIG. **3**B, to allow dirt and debris to exit the compartment **312**.

[0098] FIGS. **4**F-**4**I illustrate another exemplary tray table **104** having a rotatable assembly **308**. FIGS. **4**F-**4**G provide a back perspective view of the tray table **104**. FIGS. **4**H-**4**I respectively provide a back and front perspective view of the tray table **104**. As can be seen, the rotatable assembly **308** may be formed at the back end **120** of the tray table **104** rather than inset from the back end as described with regard to the above embodiment. The rotatable assembly **308** may comprise a body **332** having a cavity **132** for receiving and securing a portable electronic device **204**.

[0099] The body **332** may be an elongated structure having flat sides. For instance, as shown in FIGS. **4**F-**4**I, the body **332** is a rectangular shape extending laterally between a left and right side of the tray table **104** at the back end **120** of the tray table. In one or more embodiments, a lip **420** may extend from a portion of the body **332**. As can be seen from FIG. **4**F, the lip **420** may extend from a top portion of the body **332** so that it forms a barrier to prevent items on placed on the top surface **112** of the tray table **104** from sliding off the back end **120** of the tray table.

[0100] The cavity **132** will typically extend along the length of the body **332**, such as shown. In one or more embodiments, the cavity **132** may be an elongated opening configured to accept a portion of one or more portable electronic device **204**. As shown in FIGS. **4**H-**4**I for example, the cavity **132** comprises a rectangular opening sized to accept an edge or end of a portable electronic device **204**. This secures the portable electronic device **204** within

the body **332** and allows a user to use the portable electronic device **204** without having to hold the portable electronic device.

[0101] Positioning the body **332** of the rotatable assembly **308** at the back end **120** of the tray table is advantageous in that it allows the cavity **132** to be exposed at the back end of the tray table. When the tray table **104** is in a stowed position, it will typically be in a vertical orientation with the front end **124** of the tray table being above the back end **120** of the tray table. In this manner, any dirt or debris in the cavity **132** would automatically fall out of the cavity keeping the cavity clean and unobstructed. Maintenance or other personnel may then collect such dirt and debris from the floor of the aircraft.

[0102] One or more openings **156** may be at the bottom of the cavity **132** in one or more embodiments to also aid in keeping the cavity clean. Typically, an opening **156** will extend from the bottom of the cavity **132** to an external surface of the body **332**. This allows any dirt or debris that enters the cavity **132** to fall out of the cavity keeping the cavity clean. FIG. **4**G illustrates an exemplary opening **156**.

[0103] FIGS. **4**F-**4**I also illustrate operation of the tray table **104** as its rotatable assembly **308** rotates from a closed position, as shown in FIG. **4**F, to an open position as shown in FIGS. **4**H-**4**I. FIG. **4**G illustrates the rotatable assembly **308** in an intermediate position as it rotates between an open and closed position.

[0104] In the closed position, the body **332** of the rotatable assembly **308** forms a portion of the top surface **112** of the tray table **104**. For instance, as shown in FIG. **4**F, the top portion of the rotatable assembly's body **332** is coplanar with the top surface **112** of the tray table **104**. In this manner, the rotatable assembly **308** does not obstruct or hinder use of the tray table **104** when in the closed position. A passenger is therefore free to place items on the top surface **112** of the tray table **104** as desired. For example, the passenger may place food service items such as plates, cups, and utensils on the top surface **112**. As shown in FIG. **4**F, an optional cup holding inset **416** is provided to receive cups or the like. The lip **420** extends upward at the back end **120** of the tray table **104** to prevent items from falling off the back end of the tray table.

[0105] When use of a portable electronic device **204** is desired, the rotatable assembly **308** may be rotated to expose a cavity **132**. As can be seen, the body **332** of the rotatable assembly **308** may be rotated such that the cavity **132** moves in an arc starting at the back end **120** of the tray table. FIG. **4**G illustrates the body **332** having been moved from the closed position of FIG. **4**F. As the rotation of the body **332** continues, the cavity **132** moves upward thereby positioning the cavity to receive a portable electronic device **204**, such as shown in FIG. **4**H-**4**I. In this open position, the cavity **132** holds the portable electronic device upright for use. FIGS. **4**H-**4**I respectively provide a back and front perspective view of the tray table **104** with its rotatable assembly **308** in an open position and holding a portable electronic device **204**.

[0106] In one or more embodiments, the rotatable assembly **308** may be configured such that the opening of the cavity **132** is positioned above the top surface **112** of the tray table **104** when the rotatable assembly is in an open position, such as shown in FIGS. **4**H-**4**I. This is advantageous in that the higher elevation helps prevent any dirt and debris that may be on the top surface **112** of the tray table **104** from entering the cavity **132**.

[0107] FIGS. **4**J-**4**K illustrate side cross-sectional views of the rotatable assembly **308** of FIGS. **4**F-**4**I in operation. FIG. **4**J shows the rotatable assembly **308** in a closed position while FIG. **4**K shows the rotatable assembly in an open position. As can be seen, the cavity **132** is oriented toward the back end **120** of the tray table **104** in the closed position, while the cavity **132** is oriented upward to receive a portable electronic device **204** in the open position.

[0108] As described above, the cavity **132** may comprise a front wall **140**, a back wall **144** and one or more sidewalls **148**. The bottom **152** of the cavity **132** engages an edge or end of a portable electronic device to support the portable electronic device. An optional opening **156** at the bottom of the cavity **132** allows dirt and debris to exit the cavity, as described above. As can be seen from FIG. **4**K for example, in the open position, dirt or debris that enters the cavity **132** would fall into the opening **156** and out of the body **332**. It is noted that dirt and debris that is too large to fit into the opening **156** would fall out of the cavity **132** when the tray table **104** is put in a stowed position, as described above.

[0109] The body **332** of the rotatable assembly **308** may be mounted to the tray table **104** via one or more rotatable mounts. FIG. **4**L illustrates a back cross-sectional view of the rotatable assembly **308** where the body **332** of the rotatable assembly is mounted to the body **136** of the tray table **104** via a pair of axels **336**. As can be seen, the axels **336** may extend from the left and right or lateral ends **424** of the body **332** and into a portion of the tray table's body **136** (or vice versa). The body **332** can thus rotate about the axels **336** between the closed and open positions, as shown respectively in FIGS. **4**J-**4**K.

[0110] It is contemplated that some embodiments of the tray table **104** may comprise movable or removable portions to allow for cleaning and maintenance. Referring to FIGS. **5**A-**5**C for example, a first portion **504** of the tray table **104** may be configured to separate from a second portion **508** of the tray table. at one or more separations **516**. In one or more embodiments, the two portions **504**, **508** may meet at or near the support **108**. In this manner, the two portions **504**, **508** would be separable at or near the support, such as delineated by Line **2** of FIG. **5**. Once separated, access to an interior portion of the support **108** is more easily achieved, such as to clean or maintain the support **108** or any elements associated with the support (such as adjustable elements).

[0111] One or more fasteners **512** may be used to allow the first portion **504** and second portion **508** to removably attach to one another. For example, as shown, the tray table **104** may comprise one or more hinges that allow the first and second portions **504**, **508** to fold relative to one another, thereby providing access to an interior portion of the support **108**. It is contemplated that the hinge may include a biasing mechanism and or locking mechanism to hold the first and second portions **504**, **508** in a planar configuration (such as shown in FIG. **55**A) during use. One or more additional fasteners **512** such as screws, pins, claps, magnets or the like may also or alternatively be used to hold the first and second portions **504**, **508** in the planer configuration.

[0112] Alternatively, the first and second portions **504**, **508** may be completely separable form one another, such as in the embodiments of FIGS. **5**B-**5**C. For example, the first and second portions **504**, **508** may be configured to pull apart

when detached from one another. In such embodiments, FIG. **5**C illustrates the tray table **104** having its first and second portions **504**, **508** separated from one another.

[0113] It is noted that the first and second portions **504**, **508** may comprise mating surfaces or structures that secure the first and second portions together when connected. For example, the first and second portions **504**, **508** may have grooves, slots, tabs, or the like that correspond to one another. Also, as stated above, one or more additional fasteners **512** may be used to secure the first and second portions **504**, **508** in a planar configuration. As shown in FIG. **5**C for example, one or more pins **520** may connect and secure the first and second portions **504**, **508** together when assembled.

[0114] It is contemplated that, when mounted to an aircraft passenger seat, only the first or second portion **504**, **508** would be attached to the tray table support arms of the seat. This permits the first and second portions **504**, **508** to be removable from one another (such as to clean or maintain the support **108**) without removing the tray table **104** from the seat. Alternatively, both the first and second portions **504**, **508** may be attached to the tray table support arms, such as to secure the first and second portions together in a planar configuration. In such case, additional fasteners for holding the first and second portions together need not be used.

[0115] FIGS. **6**A-**6**F illustrate various slots or cavities **132** having biasing mechanisms **604** that may be used to help hold or secure a portable electronic device **204**. In general, a biasing mechanism **604** applies force to a portable electronic device **204** to increase friction between the portable electronic device and a cavity **132** in which it has been inserted. For instance, a biasing mechanism **604** may clamp or squeeze a portion of a portable electronic device **204** to help secure the portable electronic device within a cavity **132**. As can be seen from FIG. **6**A-**6**F, a biasing mechanism **604** may be used in embodiments with a fixed support **108** or rotating assembly **308**, including those disclosed above.

[0116] FIGS. **6**A-**6**B provide a side cross-sectional view of a first biasing mechanism **604** in operation. As can be seen, a biasing mechanism **604** may comprise a presser **620** that applies force to a portable electronic device **204** to help secure the portable electronic device. In the embodiment of FIGS. **6**A-**6**B, the presser **620** is pivotally attached to the body **132** of a tray table **104** at a mount **624** within a cavity at back end **120** of the tray table via a connecting rod **616**. It is noted that a pivot or rotating mount may attach the connecting rod **616** at either or both of its ends. The presser **620** is biased or pushed into a cavity **132** of the tray table **104** by one or more biasing devices **612**. This causes the presser **620** to protrude into the cavity **132**.

[0117] A presser **620** may also be coupled to one or more biasing devices **612**, such as various springs, elastic or other resilient device/material. A variety of biasing devices **612** are illustrated in FIGS. **6**A-**6**B. It is contemplated that only a single biasing device **612** is needed in most embodiments however. It can be seen with reference to FIGS. **6**A-**6**B that a biasing device may bias movement of a presser **620** at its pivot (e.g., at a rotating mount **624**), at its connecting rod **616**, or at the presser **620** itself.

[0118] In FIGS. **6**A-**6**B, the biasing device **612** directly connected to the presser **620** expands to push the presser into the cavity **132**, the biasing device connected to the connecting rod **616** compresses to pull the presser into the cavity, and the biasing device at the rotating mount **624** applies a rotational force with rotates the presser into the cavity. It is noted again that only a single biasing device **620** need be used in most embodiments. The presser **620** may protrude into the cavity **132** through an opening **608** in the back wall **144** (or front wall **140**).

[0119] As can be seen from FIG. **6**B, when a portable electronic device **204** is inserted in the cavity **132**, the presser **620** is forced at least partially out of the cavity **132** to allow the cavity to accommodate the portable electronic device. In this position, the presser **620** continues to exert pressure or force on the portable electronic device **204** from its one or more biasing devices **612**.

[0120] FIGS. **6**C-**6**D provide a cross-sectional view of a second biasing mechanism **604**. As can be seen, the presser **620** in this embodiment is within the cavity **132** at a first wall **144** of the cavity. A biasing mechanism **612** applies force to push the presser **620** towards the opposite wall **140** of the cavity. Alternatively or in addition, a biasing mechanism **612** may be at a pivot point of the presser **620** and apply rotational force at such point to push the presser **620** towards the opposite wall. The presser **620** is pivotally or movably mounted to a mount **624**, similar to above. It is noted that a presser **620** may move linearly rather than rotationally in some embodiments. For example, a presser **620** may extend and retract parallel to a front or back wall **140**, **144**.

[0121] As can be seen in FIG. **6**D, when a portable electronic device **204** is inserted in the cavity **132**, the presser **620** is forced back towards the first wall **144** to allow the cavity to accommodate the portable electronic device. In this position, the presser **620** continues to exert pressure or force on the portable electronic device **204** from its one or more biasing devices **612**.

[0122] A presser **620** may be rounded, angled or both to prevent a presser **620** from obstructing entry of a portable electronic device **204** into a cavity **132**. As can be seen in FIGS. **6**A-**6**B for instance, the presser **620** is rounded and may rotate at the distal end of its connecting rod **616** to allow insertion of a portable electronic device **204** without obstruction. In the embodiment of FIGS. **6**C-**6**D, the presser **620** has an angled distal end so as to also allow a portable electronic device **204** to be inserted into its cavity **132** without obstruction.

[0123] FIGS. **6**E-**6**F illustrate another embodiment of a biasing mechanism **604** where the presser **620** forms one of the walls **140** of the cavity **132**. FIGS. **6**E-**6**F also show that a biasing mechanism **604** may be used in embodiments having a rotating assembly **308**.

[0124] As can be seen, the presser **620** in this embodiment is pivotally or movably mounted via a mount **624**. A biasing device **612**, such as a spring, is at the mount **624** and provides a rotational bias which forces or moves the presser **620** towards the opposite wall **144** of the cavity. In one or more embodiments, the biasing device **612** may be about or at a pivot or axel of a mount **624** to apply rotational force to the presser **620**.

[0125] As can be seen from FIG. **6**F, the bias of the presser **620** is overcome as a portable electronic device **204** is inserted into the cavity **132**. The presser **620** is moved outward to accommodate the portable electronic device **204** and continues to apply inward pressure or force to help secure the portable electronic device in the cavity **132**.

[0126] Though shown at or forming a front wall **140** or back wall **144** of a cavity **132** in FIGS. **6**A-**6**F, it is contemplated that a biasing mechanism **604** may be at either

or both walls **140**, **144** of a cavity. In addition, it is contemplated that a presser **620** need not be pivotally or rotatably mounted in all embodiments. For example, a presser **620** may be mounted to a telescoping mount that moves in a linear inward and outward fashion. A biasing device **612** can be used to bias the telescoping mount outward to apply force or pressure to a portable electronic device **204** when inserted.

[0127] FIGS. **6**G-**6**K illustrate another exemplary embodiment comprising a rotatable assembly **308** and a presser **620**. The perspective view of FIG. **6**G illustrates the rotatable assembly **308** installed in an exemplary tray table **104** and rotated to an open position. A portable electronic device **204** is received within the cavity **132** of the rotatable assembly **308** and held for use by a passenger or other user. A body **332** of the rotatable assembly **308** may be rotatably mounted to a tray table **104** via one or more axels **336** (and openings **632** for receiving such axels), pivots or other rotatable mounts. Similar to above, the presser **620** is movable to receive and hold a portable electronic device with a cavity **132** of the rotatable assembly **308**.

[0128] FIGS. **6**H-**6**I respectively illustrate top and bottom perspective views of an exemplary presser **620** in a retracted position, while FIGS. **6**J-**6**K respectively illustrate top and bottom perspective views of the presser in an extended position. As can be seen, the presser **620** may form or comprise a front wall **140** and bottom **152** of a cavity **132** and be movable (i.e., extendable and retractable) therewith. A body **332** of a rotating assembly **308** may comprise a notch **636** to receive a presser **620**. It can be seen from FIGS. **6**H and **6**J for example, that the body **332** comprises a central notch **636** where the presser **620** is movably mounted.

[0129] In a retracted position the front wall **140** and back wall **144** are closer to one another as compared to an extended position. This allows a cavity **132** to accommodate portable electronic devices of various widths. Also, a biasing mechanism **604** may apply a force to move the presser **620** (and therefore the front wall **140**) toward the back wall **144**. This too helps secure a portable electronic device within a cavity **132**.

[0130] As can be seen from FIG. **6**K, one or more biasing devices **612** may be used to produce such force. In the embodiment of FIG. **6**K for example, biasing devices **612** comprising springs extend between the body **332** of the rotatable assembly **308** and the presser **620**. The biasing devices **612** apply force causing the presser **620** to be biased to a retracted position, such as that shown in FIG. **6**I.

[0131] It is noted that a biasing mechanism **604** may include one or more guides **628** to guide or control the movement if a presser **620**. As shown in FIG. **6**K for example, one or more guide pins **628** extend from the body **332** and into corresponding openings of the presser **620** to guide the movement of the presser as it moves between an extended and retracted position. A pin **628** may have an enlarged distal end to prevent the presser **620** from extending beyond a predefined point. It is contemplated that one or more guides **628**, may be at the lateral ends of a presser **620** in some embodiments. For example, a linear channel may be formed in each lateral end of a presser **620** while corresponding rails extend from the sides of the notch **636** of a body **332**, or vice versa.

[0132] In some embodiments, a biasing mechanism **604** need not be provided. In such embodiments, a presser **620** may be held in position by friction, such as between one or more pins **628** and their corresponding openings. Alternatively, one or more detents and corresponding tabs may be used to hold a presser **620** in position. For example, a detent or tab may be formed at the lateral ends of a presser **620** with a corresponding tab or detent at a body **332** of a rotatable assembly **308**.

[0133] FIGS. **7**A-**7**B illustrate a side view of an exemplary tray table **104** having a collapsible slot or cavity **132**. As can be seen, a slidable or movable bracket **704** forms a back wall **144** and bottom **152** of the cavity, while a front wall **140** of the cavity **132** is formed by the tray table's body **136**. The bracket **704** is slidable at a back end **120** of the tray table **104** to allow a cavity **132** to be expanded and collapsed.

[0134] For instance, the bracket **704** has been moved toward the tray table's body **136** in FIG. **7**A. This collapses the cavity **132**. In FIG. **7**B, the bracket **704** has been moved outward from the body **136** to expand the cavity **132**. Once expanded, a cavity **132** can receive, support and secure a portable electronic device therein, such as described above. It is noted that one or more biasing devices **612**, such as springs, may pull the bracket **704** toward the body. This bias applies pressure or force to a portable electronic device to help secure the portable electronic device once inserted in the cavity **132**. Alternatively or in addition, it is noted that the back wall **144** may be formed by a presser **620**, such as described above with regard to FIGS. **6**E-**6**F. In another embodiment, a presser **620**, such as described with regard to FIGS. **6**A-**6**D, may be at the front wall **140** or back wall **144** of the cavity.

[0135] Typically, a bracket **704** will comprise a base **716** and an upright **712**. The base **716** and upright **712** may be perpendicular to one another such as shown in FIGS. **7**A-**7**B. Alternatively, the base **716** and upright **712** may extend at various angles. For example, an upright **712** may be angled backwards to allow a portable electronic device to be supported at a reclined angle. It is noted that, in some embodiments, a portion of a tray table's body **136** may have a notch **708** or removed to accommodate the base **716** of a bracket **704**. Alternatively a body **136** may have a slot or cavity therein to receive the base **716** of a bracket **704**.

[0136] It is noted that a notch **708** need not be provided in every embodiment. For instance, in a retrofit where the bracket **704** is installed on a preexisting tray table **104** the bracket may be movably secured at a bottom surface of such tray table. Alternatively, a notch **708** may be machined or otherwise formed in the preexisting tray table **104**.

[0137] One or more slides may be used to secure a bracket **704** to a tray table's body **136**. A slide may comprise a rail, groove, or other structure that allows a bracket **704** to move inward and outward to respectively collapse and expand a cavity **132**. In FIGS. **7**A-**7**D, slides comprising a peg **720** and rail **724** movably attach the bracket **704** to the tray table's body **136**. As can be seen, the pegs **720** have an enlarged head at their distal ends. One or more narrower pins extend from the enlarged head and are secured to the body **136**. As shown in the bottom views of FIGS. **7**C-**7**D, the one or more pins slide within rails **724** of the base **716** of a bracket **704**, while the enlarged heads secure base **716**.

[0138] In FIG. **7**C, the cavity **132** is collapsed. The bracket **704** can then be slid outward to expand the cavity, such as shown in FIG. **7**D. In an expanded position, the front wall **140** and back wall **144** are sufficiently separated to accept a portable electronic device. Thereafter, a portable electronic device can be inserted into the cavity. When no longer

desired, the cavity **132** can again be collapsed by moving the bracket inward towards the tray table's body **136**. This reduces the size of the tray table **104** allowing it to be stowed in a more space saving manner.

[0139] FIGS. **8**A-**8**D illustrate various holding assemblies **804** for holding portable electronic devices. As can be seen, a holding assembly **804** may comprise one or more front walls **140** and one or more back walls **144** that are each rotatable or otherwise movable. FIGS. **8**A-**8**B respectively illustrate a holding assembly **804** in a closed state and open state achieved by rotating or moving the front wall **140** and back wall **144**. As can be seen, in a closed state, a holding assembly **804** provides a planar top surface that will typically be coplanar with the top surface of a tray table's body. A portable electronic device may be received in and held by a holding assembly **804** when in an open state.

[0140] A front wall **140**, a back wall **144** or both may be rotatably attached to one or more base structures **808**. As shown in FIGS. **8**A-**8**B for example, the front wall **140** and back wall **144** are pivotally mounted to a base structure **808** via one or more rotating mounts **820**, **824**. A rotating mount **820**, **824** may be a hinge, axle, pivot or other rotating structure. A back wall **144** may overlap or otherwise engage a front wall **140** such that when rotated toward a closed state, the back wall causes the front wall to rotate to a closed state as well. An open area **832** of a back wall **144** may receive a front wall **140** to provide a generally planar top surface, such as shown in FIG. **8**A.

[0141] Referring to FIG. **8**B, one or more biasing devices **612** may bias a front wall **140** to a particular position. For example, a biasing device **612** may rotate a front wall **140** to an open position as a back wall **144** is moved to its open position. A biasing device **612** may be a coil, leaf or other spring, or other resilient device. It is contemplated that an optional tab **876** may be provided in some embodiments, to allow a user to rotate a front wall **140** by pushing on the tab.

[0142] One or more protrusions or steps **812** may be attached to the front wall **140** to support a portable electronic device, as will be described further below. It is noted that a holding assembly **804** may have one or more reliefs **836** to accommodate surface features **840** of a holding assembly to provide a low-profile structure when the holding assembly is in a closed state. In FIG. **8**B for example, reliefs **836** in the back wall **144** receive protruding surface features **840** (that house rotating mounts **824**) allowing the back wall to rotate such that it is perpendicular to the base structure **808** when in a closed state.

[0143] FIGS. **8**C-**8**D respectively illustrate another exemplary holding assembly **804** in a closed and open state. FIG. **8**D provides a perspective view of the components of a holding assembly **804** as well. As can be seen, similar to the above, the holding assembly **804** comprises a front wall **140** and a back wall **144** that are rotatable between a closed and open state. A recess **408** in a base structure **808** of the holding assembly **804** may be provided to receive a back wall **144** such that it is coplanar or flush with a top surface of a tray table when in a closed state, such as shown in FIG. **8**C.

[0144] Referring to FIG. **8**D, which is partially transparent to illustrate componentry of an exemplary holding assembly **804**, a holding assembly may comprise one or more compartments **848** that receive or house one or more components. For instance, one or more biasing devices **612**, one or more slides **860** or both may be (partially or completely) received or enclosed in a compartment **848**. In general, a slide **860** allows a user to actuate, rotate or otherwise control a wall of the holding assembly. Typically, a slide **860** will control movement of a front wall **140**, such as by being connected thereto.

[0145] As shown in FIG. **8**D for instance, the slide **860** is connected to the front wall **140** via a pivot **868** or hinge. In this manner, when a slide **860** is moved forward or backward, the front wall **140** pivots. Typically, forward motion of a slide **860** will cause a front wall **140** to rotate downward, while backward motion of a slide will case a front wall to rotate upward.

[0146] One or more biasing devices **612**, such as springs or other resilient devices, may bias a slide **860** to a particular position. In the embodiment of FIG. **8**D for example, biasing devices **612** bias the slide **860** toward the back end of the holding assembly **804**. This also positions the front wall **140** as shown in FIG. **8**D. A user may move a slide **860** forward toward a front end of the housing assembly **804** to rotate the front wall **140** upward and away from the back wall **144**.

[0147] A portable electronic device may then be more easily inserted between the front wall **140** and back wall. One or more biasing devices **612** then apply force on the portable electronic device through the slide **860** and front wall **140** to hold the portable electronic device. A handle **856** may be provided to allow a user to more easily manipulate a slide **860**. A handle **856** may be a depression, such as shown, or be a knob, textured area or the like.

[0148] A slide **860** may comprise one or more stops or bumpers **852**, which limit the range of motion of a slide by engaging a portion of a base structure **808** or other structure. In the embodiment of FIG. **8**D for instance, the bumper **852** stops motion of the slide when it engages the end of its compartment **848**. A slide may also comprise one or more flanges **864** or the like that engage a biasing device **612**. A bumper **852** may be attached to a flange **864**, such as shown in FIG. **8**D.

[0149] As described above, a back wall **144** may be rotatable, such as via a rotating mount **820**. A back wall **144** may comprise a guide slot **856** in one or more embodiments, to guide rotation of the back wall. For example, a peg or the like may extend from a base structure **808** into a guide slot **856** to guide rotation of a back wall **144**, such as shown in FIG. **8**D. It is noted that a rotating mount **824** may, in some embodiments, comprise an axle **844** received in a corresponding opening in a base structure **808** to permit rotation about the axle.

[0150] FIGS. **8**E-**8**F illustrate an exemplary holding assembly **804** in use. As can be seen, a holding assembly **804** will typically be part of a tray table **104**. In one or more embodiments, a holding assembly **804** may be at a top surface **112** of a tray table's body **136**. Though shown at a back end **120** of the body **136**, it is contemplated that a holding assembly **804** may be positioned at a front end **124**, centrally or at various other locations. A base structure **808** of a holding assembly **804** may be coplanar with a top surface **112** of a tray table **104**. In addition, a base structure **808** may be inset into the body **136** to allow a back wall **144** to be substantially flush with the top surface when closed.

[0151] It is noted that a holding assembly **804** may be integral with or formed by a portion of a body **136** of a tray table **104** in some embodiments. To illustrate, a base structure **808** of a holding assembly may be formed by a portion of a body **136**. In other embodiments, a holding assembly

804 may be a separate structure attached to a tray table 104. Attachment may occur via one or more adhesives, welds or mechanical fasteners. It is contemplated that a holding assembly 804 may be removably attached in some embodiments, such as by one or more rails, clips, screws or the like.

[0152] As shown in FIGS. 8F, a portable electronic device 204 may be received between a front wall 140 and back wall 144 of a holding assembly 804. One or more biasing devices 612 may be provided to press a portable electronic device 204 between a front wall 140 and back wall 144, such as described above. In one or more embodiments, a front wall 140 may comprise a different material at its distal end 872. For example, a distal end 872 may be rubber or other resilient material, textured or both, such as to better secure a portable electronic device 204 and avoid scratching or otherwise damaging the same. Alternatively, or in addition, a distal end 872 may be a rounded or eased shape to prevent damage and aid in insertion of a portable electronic device 204. One or more steps 812 provide support for an edge of a portable electronic device 204. As can be seen, a step 812 may be at a proximal end of a back wall 144 in one or more embodiments.

[0153] A portable electronic device 204 may be secured by inserting the portable electronic device between a front wall 140 and back wall 144 of a holding assembly 804. In some embodiments, a front wall 140 may be rotated to expand the gap between the front wall and back wall 144 before a portable electronic device 204 is inserted. As described with regard to FIGS. 8C-8D, a slide 860 may be moved to rotate a front wall 140.

[0154] A portable electronic device 204 may be removed by moving it out from between a front wall 140 and back wall 144. It is contemplated that a front wall 140 may be rotated to expand the gap between the front wall and back wall 144 prior to removing a portable electronic device 204. This reduces pressure on the portable electronic device 204 allowing it to be more easily removed. As described above, a slide 860, if provided, may be used to rotate a front wall 140.

[0155] A tray table 104 will typically be movably or rotatably mounted to a vehicle at one or more mounting points 116. For example, a tray table 104 may be mounted to a vehicle seat via one or more mounting arms. It is contemplated that a holding assembly 804 may be directly mounted to a seat or other portion of a vehicle in some embodiments.

[0156] FIGS. 9A-9C illustrate a variation whereby a front wall 140 is movable in a different manner. In the exemplary embodiment of FIG. 9A for example, the front wall 140 slides horizontally to engage a portable electronic device 204. One or more biasing devices 612 may bias a front wall 140 to a particular position. As can be see, a front wall 140 may be at a recess 408 in some embodiments.

[0157] FIGS. 9B-9C respectively illustrate a front wall 140 that retracts and extends to support a portable electronic device 204. As can be seen in FIG. 9B, a biasing device 612 and a front wall 140 may be housed in a compartment 848 when a back wall 140 is closed. A biasing device 612 may bias the front wall 140 to an extended position, causing it to extend when the back wall 144 is opened, such as shown in FIG. 9C. When extended, a front wall 140 helps hold a portable electronic device 204.

[0158] While various embodiments of the invention have been described, it will be apparent to those of ordinary skill in the art that many more embodiments and implementations are possible that are within the scope of this invention. In addition, the various features, elements, and embodiments described herein may be claimed or combined in any combination or arrangement.

What is claimed is:

1. A holding assembly for holding a portable electronic device in a vehicle comprising:
- a base having a first portion and a second portion;
- a first planar member at the first portion and movable between a first position and second position;
- a second planar member at the second portion and movable between a first position and a second position; and
- a protrusion at a distal end of the second planar member for engaging the portable electronic device;
- wherein the first planar member and the second planar member are independently movable.

2. The holding assembly of claim 1, wherein the holding assembly is mounted to a vehicle seat.

3. A holding assembly for holding a portable electronic device in a vehicle comprising:
- a base having a first portion and a second portion;
- a first planar member at the first portion and movable between a first position and a second position;
- a second planar member at the second portion and movable between a first position and a second position;
- wherein the first planar member and the second planar member are independently movable.

4. The support of claim 3, further comprising a protrusion at a distal end of the second planar member.

5. The support of claim 3, wherein the holding assembly is mounted to a vehicle seat.

6. A method for supporting a portable electronic device in a vehicle comprising:
- providing a holding assembly comprising a first planar member and a second planar member, wherein the first planar member and the second planar member are independently movable;
- engaging the portable electronic device with the first planar member and the second planar member;
- holding the portable electronic device at an upright position using at least one of the first planar member and the second planar member.

7. The method of claim 6, wherein the second planar member comprises a protrusion at a distal end of the second planar member.

8. The method of claim 6, further comprising mounting the holding assembly to a vehicle seat.

* * * * *