United States Patent [19]

Moniot

[11] **3,795,021**

[45] **Mar. 5, 1974**

[54] **HEAD POSITIONING PILLOW**

[76] Inventor: **Vincent E. Moniot,** 5919 Hanna Ave., Woodland Hills, Calif. 91364

[22] Filed: **Nov. 18, 1971**

[21] Appl. No.: **200,086**

[52] **U.S. Cl.** ..... **5/341,** 5/61, 5/348 R, 297/284, 297/391, 297/DIG. 3

[51] **Int. Cl.** **A47c 27/08,** A47c 7/14

[58] **Field of Search** 5/391, 337, 338, 348, 327, 5/92, 91, 71, 341, 347, 200; 297/DIG. 1

[56] **References Cited**

UNITED STATES PATENTS

3,128,480	4/1964	Lineback	5/349
3,440,976	4/1969	Burne	5/348
3,332,656	7/1967	Johnson, Jr. et al.	5/348
2,838,099	6/1958	Warner	5/349

Primary Examiner—Casmir A. Nunberg

Attorney, Agent, or Firm—Robert E. Geauque

[57] **ABSTRACT**

A pillow for the headrest section of a chair wherein the pillow is divided into four inflatable sections, a human head is adapted to come into contact with each section, by controlling the inflating of each section the position of the human head can be controlled.

11 Claims, 13 Drawing Figures

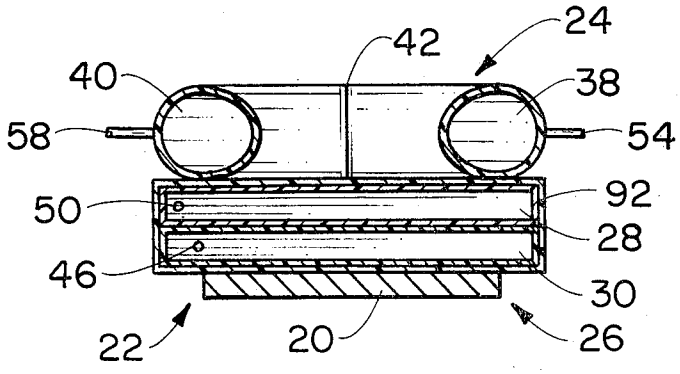

Fig. 1.

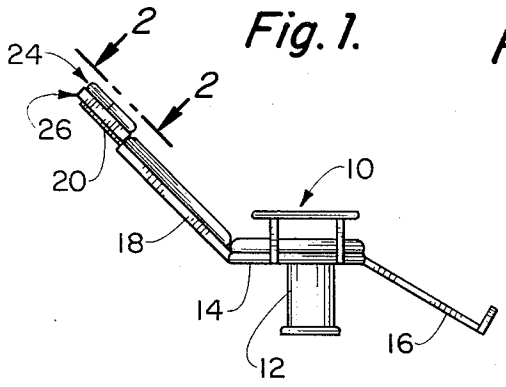

Fig. 2.

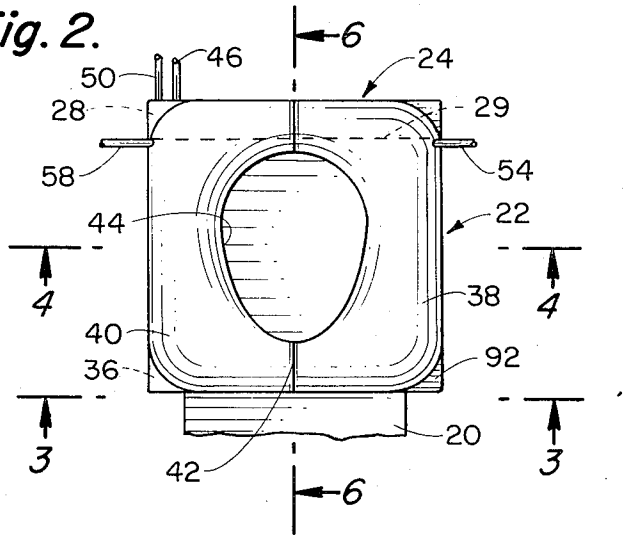

Fig. 3.

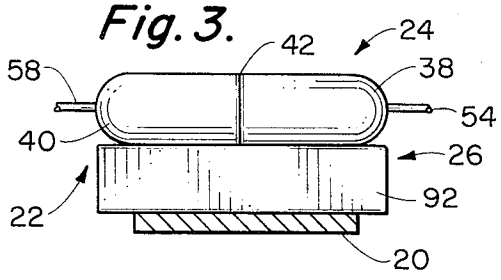

Fig. 4.

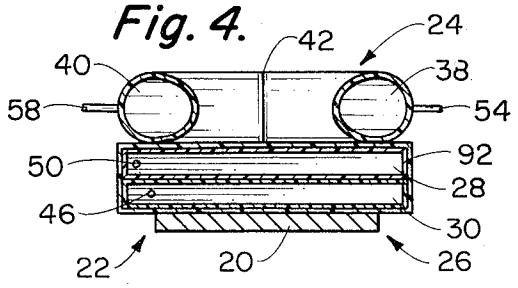

Fig. 5.

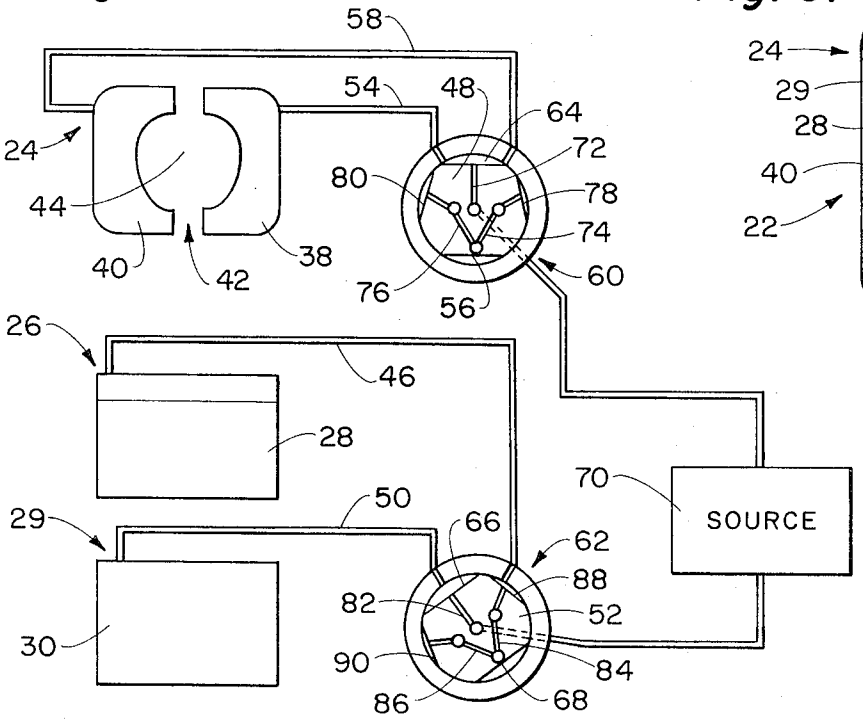

Fig. 6.

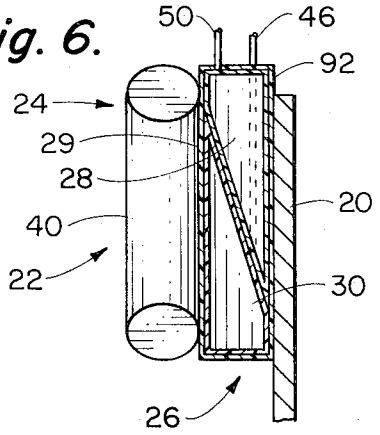

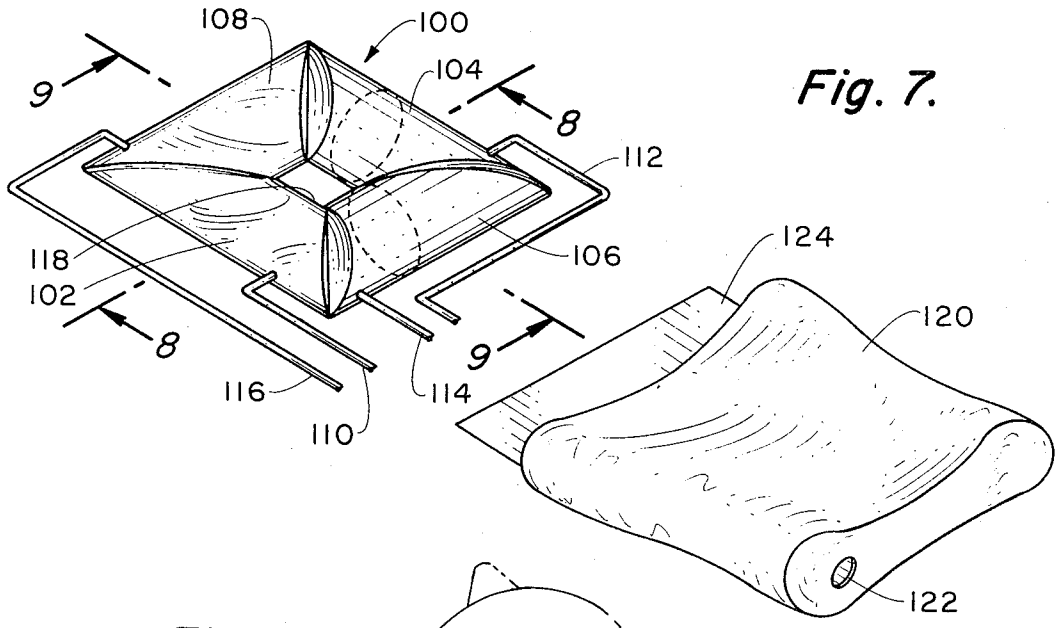

Fig. 7.

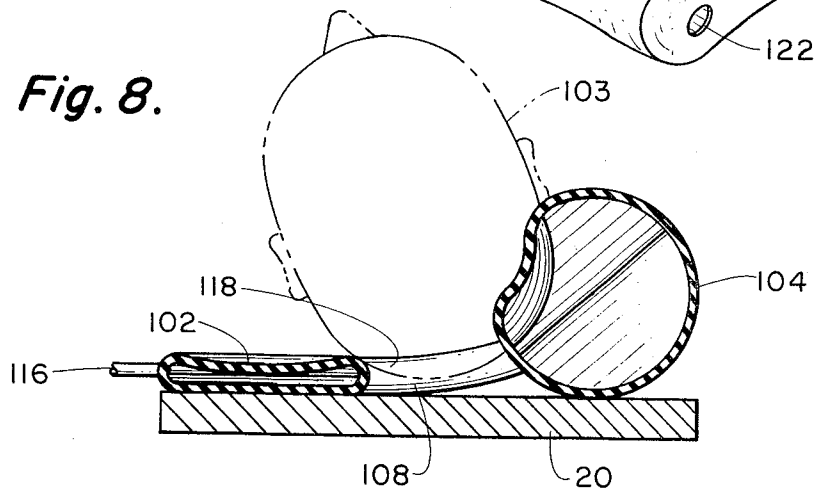

Fig. 8.

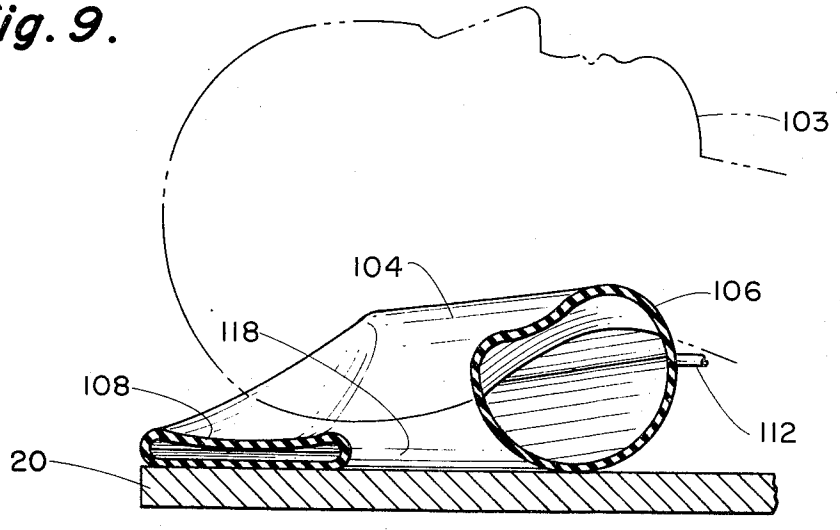

Fig. 9.

Fig. 10.

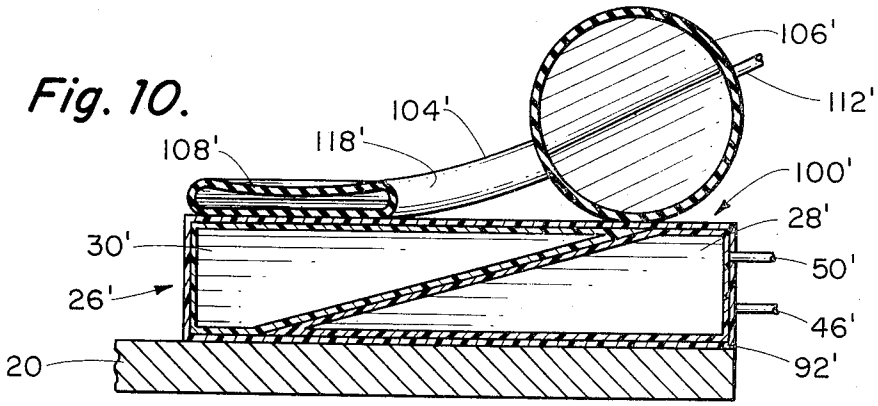

Fig. 11.

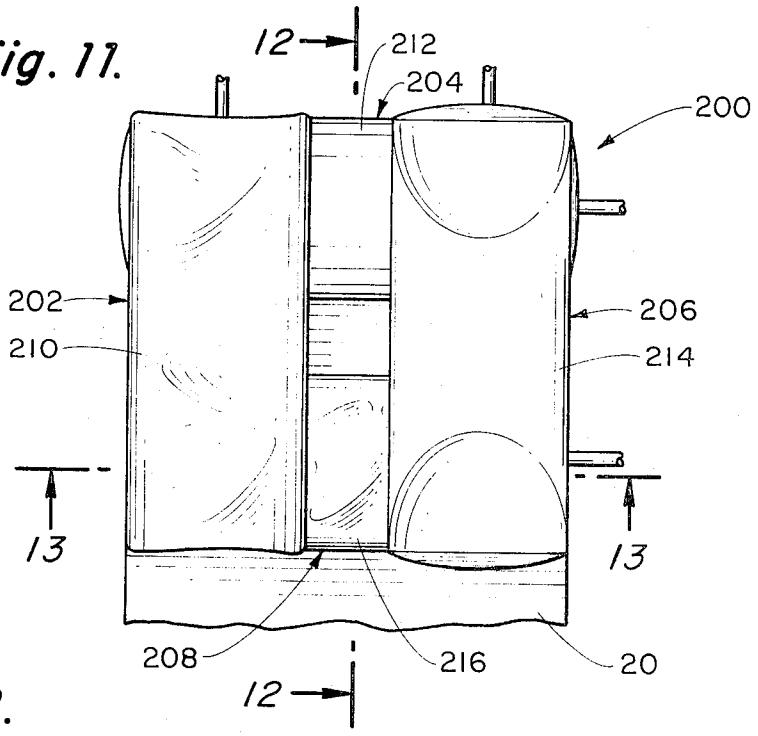

Fig. 12.

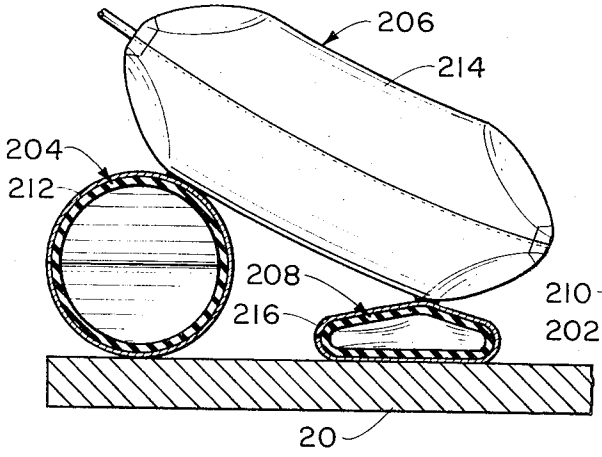

Fig. 13.

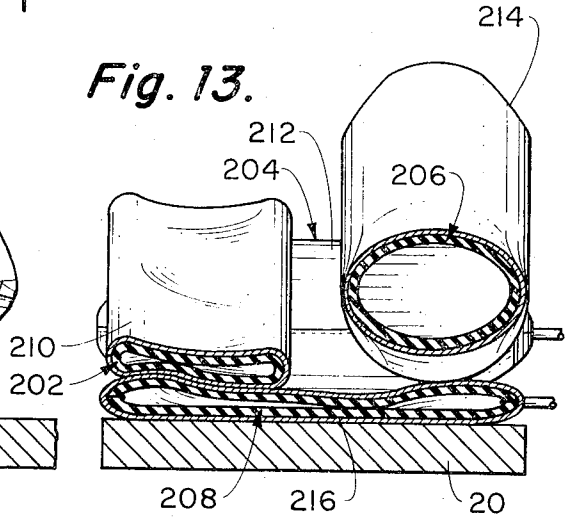

HEAD POSITIONING PILLOW

BACKGROUND OF THE INVENTION

The field of this invention relates to a head positioning pillow for a chair, and more particularly to a pillow which positions the human head in a particular manner when performing a service such as dental work upon the individual.

In the field of dentistry, the patient is placed in a lounge type of chair with the patient to assume a semi-reclining or reclining position. The patient is to then open his mouth and permit the doctor to work for a period of time upon the patient's teeth.

From the patient's point of view, such an arrangement is undesirable and it has been found that patients subconsciously tend to withdraw by moving or rotating their heads to a position away from the doctor. From the doctor's point of view, this movement on the part of the patient significantly hinders the dental procedure tending to cause the doctor to make errors. Additionally, this head movement on the part of the patient requires the doctor to frequently ask that the patient reposition the head, substantially increasing the time to effect the dental procedure.

SUMMARY OF THE INVENTION

The apparatus of this invention provides for the use of a pillow for the headrest section of a dental chair wherein the pillow can be inflated in such a manner as to tend to maintain the patient's head in a particular position. The pillow compriseS an upper inflatable layer and a lower inflatable layer. The lower inflatable layer is secured to the dental chair and is divided into a first section and a second section, each of which are separately inflated. The upper layer is secured to the lower layer and is divided into a first element and a second element, each of which are also separately inflated. The inflation of each of the elements is to be provided from a source which is to be regulated through appropriate valve means by the doctor. The first and second elements cooperate together to form an opening permitting access of the human head to rest upon the lower layer. The plane separating the first and second elements is substantially transverse to the plane separating the first and second sections.

BRIEF DESCRIPTION OF THE DRAWINGS

FIG. 1 is an overall side view of a typical dental chair employing the first embodiment of headrest of this invention;

FIG. 2 is a plan view of the headrest of this invention taken along line 2—2 of FIG. 1;

FIG. 3 is a partly-in-section view taken along line 3—3 of FIG. 2;

FIG. 4 is a cross-sectional view of the pillow of this invention taken along line 4—4 of FIG. 2;

FIG. 5 is a schematic view of the pillow of this invention illustrating the inflation procedure.

FIG. 6 is a cross-sectional view of the pillow of this invention taken along line 6—6 of FIG. 2;

FIG. 7 is an isometric view of the second embodiment of headrest of this invention;

FIG. 8 is a cross-sectional view taken along line 8—8 of FIG. 7;

FIG. 9 is a cross-sectional view taken along line 9—9 of FIG. 7;

FIG. 10 is a cross-sectional view of a third embodiment of headrest of this invention;

FIG. 11 is a plan view of a fourth embodiment of this invention;

FIG. 12 is a cross-sectional view taken along line 12—12 of FIG. 11; and

FIG. 13 is a cross-sectional view taken along line 13—13 of FIG. 11.

DETAILED DESCRIPTION OF THE SHOWN EMBODIMENTS

Referring particularly to the drawings, there is shown in FIG. 1 a typical dental chair **10** having a base **12**, a bottom **14**, a leg rest section **16**, a back rest section **18** and a headrest section **20**. The pillow **22** of the first embodiment of this invention is designed to be secured to the chair **10** in the headrest section **20**.

The pillow **22** comprises an upper layer **24** and a lower layer **26**. The lower layer **26** is divided into a first section **28** and a second section **30**. Each of the sections **28** and **30** are wedge shaped and cooperate together within a casing **92** to form a box-like configuration. The plane **29** separating the sections **28** and **30** is located substantially perpendicular to the elongated length of the chair **10**.

The upper layer **24** is divided into a first element **38** and a second element **40**. The elements **38** and **40** are connected together so as to form a plane **42** therebetween. The elements **38** and **40** are to be in an abutting relationship with the casing **92** so that the plane **42** is located substantially perpendicular to the plane **92**. Formed within each of the elements **38** and **40** is a gouged out area which cooperate together so as to form an opening **44**. The function of the opening **44** will be explained further on in the specification.

Connected to the first section **28** is a pneumatic tube **46**. Connected to the second section **30** is a tube **50**. Connected to the first element **38** is a tube **54**. Connected to the second element **40** is an inlet tube **58**.

It is to be understood that each of the sections **28** and **30** and each of the elements **38** and **40** are to be constructed of a material which would facilitate inflation such as a fabric reinforced rubber or rubber tube within a casing, or the like. However, other materials such as a plastic may be readily employed. Also foam rubber may be employed to hold the shape of the pillow casing yet not support a portion of the head unless the underlying encased bladder is inflated.

Tubes **46** and **50** are connected to a first valve **60**. Tubes **54** and **58** are connected to a second valve **62**. Each of the valves **60** and **62** are connected through an appropriate pneumatic supply hose to a source **70**. The source **70** can be any source of regulated pressurized air which is readily available in dental offices.

As shown in FIG. **5** of the drawings, the valve **60** is positioned so as to supply compressed air through the inlet passageway **72** to chamber **64** into the tubes **46** and **50** and then interiorly of the first and second elements **38** and **40**. The valve **62** is located so as to supply air from the inlet passageway **82** to chamber **66** into tube **58** into the second section **30**. The valve **62** is so positioned to exhaust air from tube **54** through chamber **33** and passageway **84** to the ambient. By turning either spool **48** of valve **60** or spool **52** of valve **62**, the elements and/or sections can either be inflated simultaneously (or independently) or deflated simultaneously (or independently). Chamber **56** of valve **60** and cham-

ber 68 of valve 62 is to be employed to exhaust simultaneously the elements and sections, respectively.

The operation of the pillow 22 of this invention is as follows: It will be presumed that a patient is occupying the chair 10 and the patient's head is resting within the opening 44. If it is desired that the doctor effect positioning of the patient's head so that the face of the patient will face to the right side of the chair 10 (that is, the side shown in FIG. 1 of the drawing), the doctor actuates valve 60 so as to effect a supplying of compressed air through the tube 54 into the first element 38. Also. the chamber 80 and passageway 76 will effect exhausting of the air within the second element 40 to the ambient.

If the doctor desires to effect movement of the patient's head to the left side of the chair 10, just the opposite movement of the valve 60 is to be effected by the doctor.

If the doctor desires to move the face of the patient so as to be more horizontal, the doctor effects movement of the valve 62 to the position shown in FIG. 5, that is, inflation of the second section 30 and deflation of the first section 28. If the doctor desires to move the face of the patient so as to be vertical, the opposite is effected with respect to valve 62 so that inflation of the first section 28 occurs and deflation of the second section 30 occurs.

By the foregoing, it is believed to be readily understood that the inflation and deflation procedure can be independently controlled by the doctor in such a manner as to tend to cause the patient's head to move and be located in a particular position. The doctor is also free to regulate the amount of inflation or deflation as desired within each of the sections and within each of the elements. Some of the elements may be fully inflated while others may be only partially deflated while still others may be fully deflated with others being partially deflated.

Referring particularly to FIGS. 7 to 9 of the drawings, there is shown a second embodiment 100 of the head positioning pillow of this invention. The second embodiment 100 is comprised of four in number of sections, a right side section 102, a left side section 104, a fore section 106 and an aft section 108. Each of the sections is composed of a thin-walled, flexible material or bladder and casing of upholstered material whic is capable of retaining air pressure. An air pressure supply tube 110 is to supply air pressure to section 102. Similarly, a tube 112, a tube 114 and a tube 116 are to supply air pressure to their respective sections 104, 106 and 108.

It is to be noted that the plan view of the sections results in a trapezoidal configuration of each of the sectons. The cross-sectional view through each of the sections shows that the cross-sectional configuration substantially resembles a circle. Each of the sections 102, 104, 106 and 108 are to cooperate in an abutting relationship as shown in FIG. 7 of the drawings so that the overall configuration of the pillow 100 resembles a rectangle.

With each of the sections cooperating together as shown in FIG. 7, a central opening 118 is formed. A human head, when positioned within the pillow 100 and adjacent opening 118, each of the sections is to be in direct contact with a portion of the human head. A casing 120 is to be employed to retain and confine each of the sections 102, 104, 106 and 108 and maintain such in their cooperative relationship. An aperture 122 is located within the casing 120 so as to permit passage of the tubes 110, 112, 114 and 116 therethrough. Casing 120 includes a flap 124 to close the casing 120 with the sections located therein. The casing may be an assemblage of four zippered bags wich contains, each, its own bladder and air connection, in case of puncture. The casing 120 may also include interiorly a soft support such as foam rubber. This foam rubber gives "shape" to the pillow in the deflated state.

The operation of the second embodiment 100 of this invention is substantially identical to the operation of the first embodiment of this invention. A valving arrangement similar to that disclosed in FIG. 5 will be employed to effect inflation and deflation of the

The operation of the second embodiment 100 of this invention is substantially identical to the operation of the first embodiment of this invention. A valving arrangement similar to that disclosed in FIG. 5 will be employed to effect inflation and deflation of the second embodiment 100. This can be readily observed from the drawing as upon inflation of element 104 and deflation of element 102 (FIG. 9), the human head 103 located within the pillow 100 tends to be turned toward the right (out of the plane of the drawing). If the opposite arrangement is effected, the human head 103 will be moved to the left (into the plane of the paper). During this head movement the sections 106 and 108 will normally be deflated but may be partially inflated.

If section 108 is inflated with section 106 deflated (FIG. 8), the human head 103 is moved forward with the person's face assuming a more vertical position. If just the opposite is effected, that is, inflation of section 106 and deflation of section 108, the human head will be moved in the aft direction with the face of the person being located more horizontal. Also, during this movement the sections 102 and 104 are normally deflated but may be partially inflated.

In FIG. 10 there is shown a modified form of this invention. In certain situations it may be desirable to displace the patient's head upward a certain distance prior to tilting of the head. This can be accomplished by employing a combined assembly of a lower layer 26' and an upper layer 100'. The lower layer 26' is basically identical to layer 26 described previously with like numerals being employed to refer to like parts. Also, layer 100' is basically identical to layer 100 described previously with like numerals being employed to refer to like parts.

In order to raise the patient's head, the operator pressurizes both chambers 28' and 30' as shown in FIG. 10. The operator may then tilt the patient's head in the manner as previously described by selective activation of sections 102', 104', 106' or 108' of the upper layer 100'.

It is to be understood that the lower layer 26' of FIG. 10 may comprise a single chamber instead of the dual chamber shown. The dual chamber gives added flexibility in that in some instances only one of the chambers may be pressurized to combine both the raising and tilting.

Referring particularly to FIGS. 11–13 of the drawings, there is shown a fourth embodiment 200 of this invention. Embodiment 200 includes sections 202, 204, 206 and 208 which are basically similar to the sections 102, 104, 106 and 108 of the second embodiment and are to be inflated in the same manner. However,

the fourth embodiment **200** differs in that the ends of each of the sections **202, 204, 206** and **208** overlap. Specifically, section **202** overlaps sections **204** and **208,** section **204** overlaps sections **202** and **206,** section **206** overlaps sections **204** and **208,** and section **208** overlaps sections **202** and **206.** As a result of the combined area at each overlap, upon inflating each of the overlapped sections, the tilting effect of the patient's head is significantly increased.

Each section **202, 204, 206** and **208** is surrounded by a separate casing **210, 212, 214** and **216,** respectively. Each section is inserted through appropriate aperture means (not shown) into its respective casing. Instead of the sections being connected together as in the second embodiment, the casings **210, 212, 214** and **216** are connected in the overlap areas as by bonding or stitching.

It is envisioned that numerous modifications could be employed without departing from the scope of this invention. For example, the dual valve arrangement depicted in FIG. **5** may be changed to a four in number valve arrangement or even possibly a single valve arrangement. Additionally, it is envisioned that the structure of this invention could be employed in other environments, for example, as upon a table to position an entire patient's body as when taking X-rays or performing other medical operations. The structure of the valves **60** and **62** is depicted here generally and forms no specific part of this invention and it is to be understood that such valves are commercially available and may take any of numerous forms.

What is claimed is:

1. A pillow for positioning a human head comprising:
an upper layer being divided into first and second spearately inflatable elements, said first and second elements being located adjacent each other with a first plane separating said elements;
a lower layer being divided into first and second separately inflatable sections, said lower layer being connected to said upper layer, said first and second sections being located adjacent each other with a second plane separating said sections; and
said second plane being positioned substantially transverse to said first plane.

2. The pillow as defined within claim **1** wherein:
each of said sections being wedge shaped and cooperating together to form a box-like configuration.

3. The pillow as defined within claim **1** wherein:
said first element of said upper layer having a first gouged-out area, said second element having a second-gouged out area, said first and second-gouged out areas cooperating together to form an opening.

4. A pillow as defined within claim **1** including:
a means to inflate each of said sections and said elements, said means includes a first valve to inflate said sections and a second valve to inflate said elements, said first valve to be capable of either simultaneous or independent activation of said sections, said second valve to be capable of either simultaneous or independent activation of said elements.

5. A pillow for positioning a human head comprising:
four in number of inflatable sections, each of said sections being adapted to contact a human head, there being a right side section and a left side section and a fore section and an aft section, each of said sections having an interior air pressure chamber, each of said sections being wholly encased and closed to the ambient, said interior chambers of said sections being not connected to transmit air pressure therebetween, whereby any one of said inflatable sections may be independently inflated with respect to the other of said sections to thereby control sideways tilting of the human head as well as vertical tilting of the human head.

6. The pillow as defined in claim **5** wherein:
the cross-sectional configuration of each of said sections basically comprising a circle substantially at the longitudinal mid-point of said section.

7. The pillow as defined in claim **6** wherein:
the center portion of said pillow formed by the cooperation of each of said sections, said center portion being non-inflatable.

8. The pillow as defined in claim **7** wherein:
a casing to surround and confine said sections.

9. The pillow as defined in claim **5** wherein:
said four sections comprise an upper layer, an additional lower inflatable layer located adjacent said upper layer, said lower layer adapted to physically displace said entire upper layer.

10. The pillow as defined in claim **9** wherein:
said lower layer comprises at least two in number of separate inflatable sections.

11. The pillow as defined in claim **5** wherein:
each of said sections overlap with two in number of other ones of said sections, said overlapping occurring adjacent the longitudinal end of each section.

* * * * *