July 9, 1957 D. A. HAMILTON 2,798,687

AUTOMATIC VOLUME CONTROL DEVICE

Filed Jan. 18, 1954 2 Sheets-Sheet 1

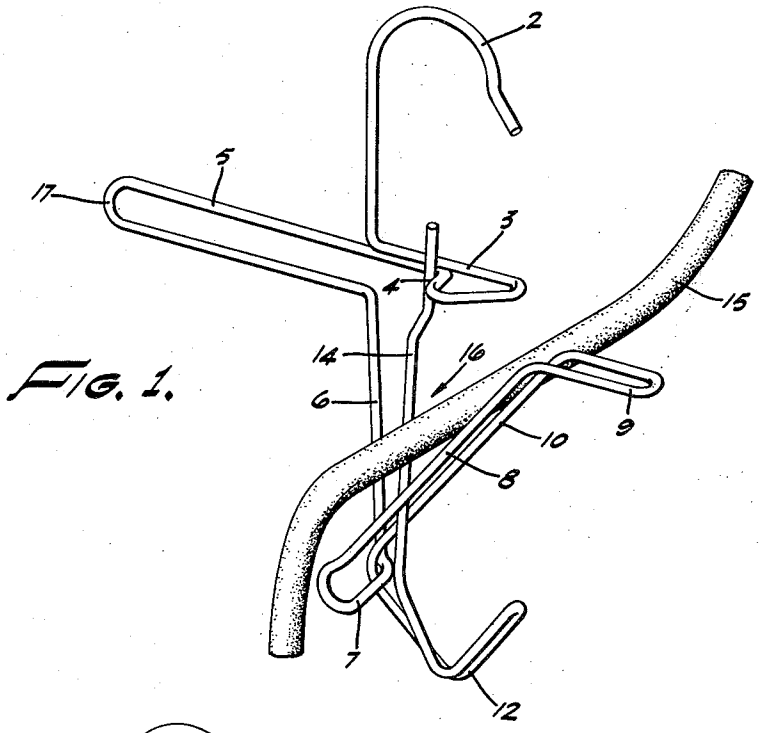

FIG. 1.

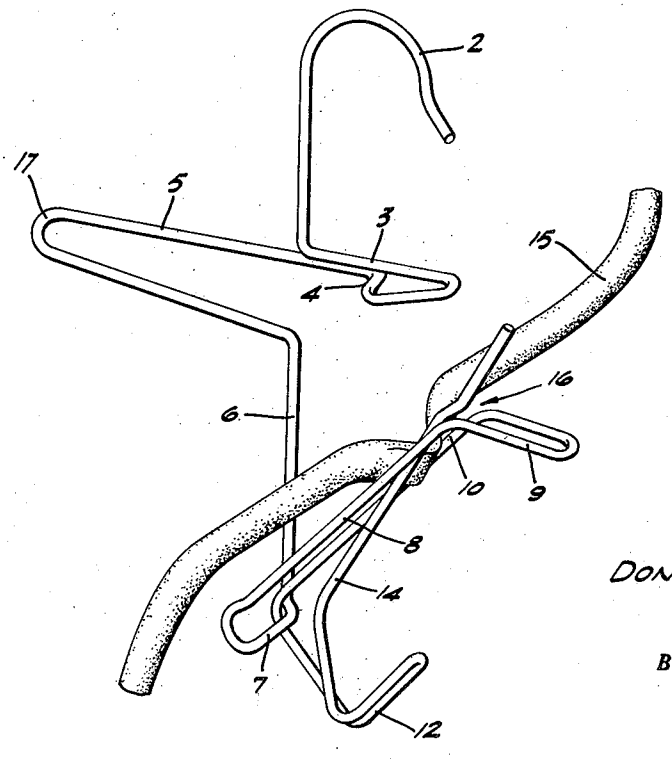

FIG. 2.

DONALD A. HAMILTON,
INVENTOR.

BY Lyon & Lyon

ATTORNEYS

July 9, 1957 D. A. HAMILTON 2,798,687

AUTOMATIC VOLUME CONTROL DEVICE

Filed Jan. 18, 1954 2 Sheets-Sheet 2

FIG. 3.

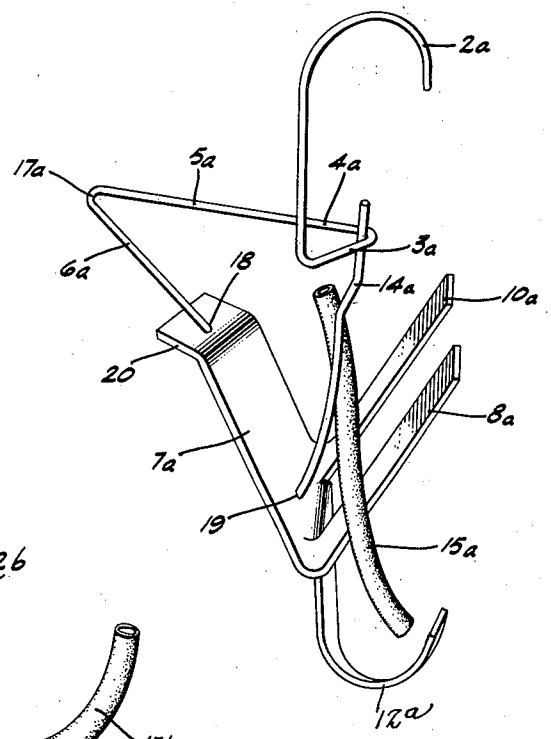

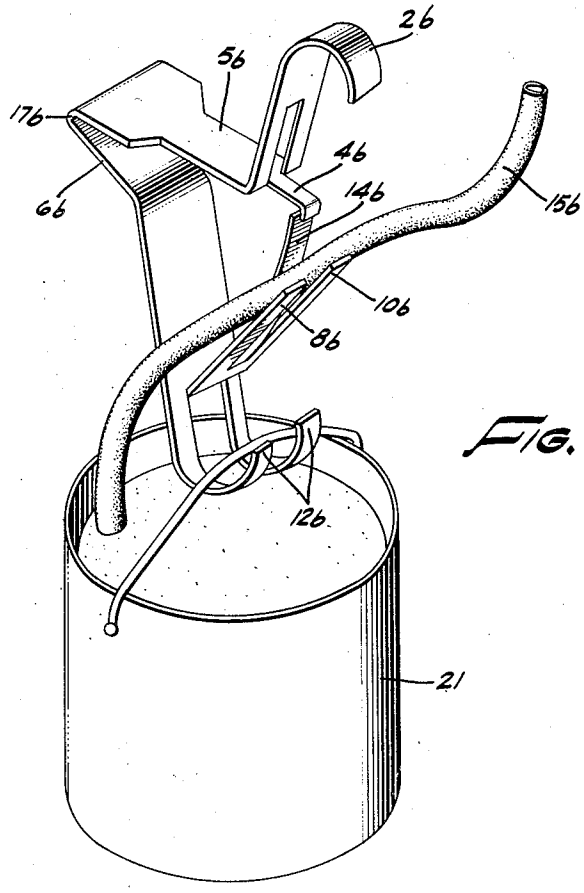

FIG. 4.

DONALD A. HAMILTON.
INVENTOR.

BY Lyon & Lyon

ATTORNEYS

United States Patent Office 2,798,687 Patented July 9, 1957

2,798,687

AUTOMATIC VOLUME CONTROL DEVICE

Donald A. Hamilton, Burbank, Calif., assignor to Don Baxter, Inc., Glendale, Calif., a corporation of Nevada

Application January 18, 1954, Serial No. 404,759
5 Claims. (Cl. 249—58)

This invention relates to a device for automatically shutting off the flow of fluid through a collapsible tubing, and refers more particularly to a device for automatically shutting off the tubing after the flow of a predetermined desired volume through the tubing. The device is particularly valuable in connection with plastic containers for drawing blood.

Where a plastic container is employed for drawing blood, difficulty is experienced in drawing an accurate volume. The plastic containers being elastic can stretch enough to permit double the desired volume. If the plastic container is made small enough so that in its extended position it holds just the desired volume, the drawing time is too slow. Devices presently used with plastic containers are all costly, have possibilities of error, have no shutoff feature, and require constant supervision of an attendant to prevent overbleeding of the donor.

It is a general object of the present invention to provide a device which will permit proper filling of plastic containers and automatically shut off the flow through a tubing to a plastic container when a predetermined volume has been withdrawn. The device of the present invention is thus intended to eliminate the necessity of an attendant being in constant supervision of the donor from whom blood is being withdrawn, and intended also to eliminate the cost and the possibility of errors attendant with present devices.

The device of the present invention is substantially a spring balance for suspending a plastic container during the operation of filling the same through a collapsible tubing. The spring balance of the present invention includes a trigger which is tripped whenever the suspended load equals a predetermined value, and said trigger is associated with means for clamping or collapsing the tubing to shut off the flow of fluid to the container. In the preferred form of the invention the device is so simple that it is constructed of a single piece of spring wire.

The device of the present invention, together with additional advantages of the invention, will be readily apparent from the following description of the preferred form or example of the invention, the description being given in connection with the accompanying drawings, in which,

Figure 1 is a perspective elevation of the device of the present invention with a collapsible tube in place, the device being shown before the trigger of the device is tripped.

Figure 2 is a similar view after the device has been tripped to collapse the tubing and shut off the flow therethrough.

Figure 3 is a perspective view of a modified form of the invention, the device being shown before the trigger of the device is tripped; and

Figure 4 is a perspective view of a further modified form of the present invention, the device being shown before the trigger is tripped.

Referring to the drawings, as illustrated the device preferably comprises a single piece of spring wire. One end of the wire is bent to provide a means on the device by which the device may be suspended from a support. The most simple form of such means is an open hook portion 2. Below the hook portion 2 the wire is bent horizontally, as indicated at 3, and curved back to provide a shoulder 4, or a catch which forms one part of

the trigger of the device. From the shoulder 4 the wire is bent preferably extending some distance to the other side of the hook portion 2 in order to provide a loop 5. The loop 5 provides a flexible or spring element in the device interconnecting the hook portion 2 with the bottom suspending hook means hereafter described by means of which it will permit an extension of the distance between said elements with increase in load. The loop 5 also provides a counterbalance portion which furnishes a means by which the device will hang substantially vertically even before it is loaded by the attachment to the device of a plastic container. This facilitates the operation of setting up the apparatus with its associated device. The wire from the counterbalance portion 5 is bent back to substantial alignment with the hook portion 2 and then extends downwardly therefrom as indicated at 6.

At the lower end of the wire portion 6 the wire is preferably bent out in substantially horizontal direction at nearly right angles to both wires 6 and 5 to provide a shoulder member. The shoulder member 7 is to assist in stiffening the hook element of the device as hereafter described, as well as to provide means for stiffening the clamping and shutoff elements. The wire is then bent somewhat inwardly and extends upwardly at a slant, as indicated at 8, the wire 8 forming one of two substantially parallel wire portions which serve as a portion of the tubing shutoff of the device. At its upper end the wire 8 is preferably bent in a horizontal direction, as indicated at 9, and then returned to form the slanting wire 10, which is the other member of the pair of slanting, substantially parallel wire members which provide a part of the whole shutoff element of the device. The wire 10 at its lower end passes around and in contact with the shoulder 7 and then is bent outwardly to form the supporting hook element 12, the wire being doubled back throughout the hook element 12, and then extends on the opposite side of the wire forming shoulder 7 upwardly, as indicated at 14. In the tripped position, as shown in Figure 2, this wire extends upwardly at a slant between the two wire portions 8 and 10. The inherent tension at which the wire is formed normally tends to retain the portion 14 in the position shown in Figure 2, but when it is desired it may be flexed until it is set over the shoulder 4, as indicated in Figure 1, in which case a V-shaped slot is provided between the member 14 and the wire portions 8 and 10. It is in this slot that the flexible tubing 15, which is to be closed by the device, normally is positioned.

When first set in the cocked position with the member 14 engaging the shoulder 4, the end of the wire portion 14 extends somewhat above its contact point with the shoulder 4. The distance that it extends above is one of the characteristics which determine the loads at which the device will trip. In use when a container is suspended on the hook portion 12 and progressively filled by the flow of fluid through the tubing 15, the weight of the plastic container and its contents causes a stretching of the wire device between the hook portion 2 and hook element 12, the curved end 17 of the portion 5 acting somewhat as a pivot point so that gradually the upper end of the wire portion 14 is progressively lowered with respect to the shoulder 4 until it snaps free from said shoulder. At that instant the tension of the wire member 14 causes the same to collapse the flexible tubing 15 between itself and the two wire members 8 and 10. The load on the device at which this trigger action will take place is adjustable by varying the length of the member 14.

In practice this device is shown readily able to control the filling of a plastic container, such as employed in drawing blood, within the degree of accuracy required and is consistently within the limits of plus or minus 5%.

Now referring to the form of the invention shown in

Figure 3, I have shown a form of the invention in which the device is made partly from spring wire and partly from sheet metal. As illustrated the wire portion of the device at its upper end comprises a suspension section or hook 2*a*. It is then bent horizontally, as indicated at 3*a*, and bent horizontally at right angles thereto, as indicated at 4*a*, thereby forming a shoulder which forms one part of the trigger of the device. At the end of the horizontal portion 5*a* terminates in the curved end 17*a* which provides a spring element in the device interconnecting with the suspension and trigger elements 6*a* and 14*a*. In the cocked position, as illustrated in Figure 3 of the drawing, one end of the wire element 14*a* is in engagement with the shoulder provided by the portion 4*a* but on increase of load the angle between portions 5*a* and 6*a* increases until the free end of the portion 14*a* is released from the shoulder 4*a*.

The tubing clamp or shutoff member of this form of the invention is provided in part by the upwardly rising portion 14*a* of the wire member and by a piece of sheet metal which consists of a strapped portion 7*a* provided with two openings 18 and 19 by which it is threaded on the wire member, the strapped portion 7*a* being bent slightly as indicated at 20.

At the lower end of the portion 7*a* the center portion of the sheet metal is cut to form a tongue which extends downward, as indicated at 12*a*, to form a hook which in practice serves to suspend the device which is to receive the blood from the tubing 15*a*. There is also provided two spaced-apart members 8*a* and 10*a* slanting upwardly at an angle and parallel thereto which form parts of the tubing shutoff of the device.

In use of this form of the invention the device is suspended from the portion 2*a* of the wire and the container suspended on the hook portion 12*a* of the sheet metal member. The tubing 15*a* (which leads to the receiver) lies across the portions 8*a* and 10*a* and between them and the wire portion 14*a*. As the container is filled the load increases until the wire 14*a* disengages downwardly from the shoulder 4*a*, the inherent tension on the wire tending to snap the portion 14*a* between the sheet metal members 8*a* and 10*a*, thereby clamping or collapsing the tubing to shut off the flow.

Now referring more particularly to the form of the invention shown in Figure 4 in this case I have again indicated the invention as formed of a single piece of metal, in this case spring sheet metal rather than spring wire as in the first form of the invention. In Figure 4 the entire device is formed of a single length of originally flat sheet metal, which is cut and bent as indicated in the drawing. As illustrated in the drawing there is the hook portion 2*b* below which a portion is cut out, as indicated, to form the tongue 4*b*, which is hooked at its end to form part of the trigger mechanism. There is also the horizontally bent portion 5*b* which extends to the bend 17*b*, from which the device extends downwardly, as indicated at 6*b*, and at the lower end terminates at one or more hook portions 12*b*, which as indicated may be used to suspend a container 21. Two parallel tongues 8*b* and 10*b* extend upwardly and form two elements of the tubing clamp or shutoff. Between these elements a further portion of the sheet metal is cut out to provide the trigger member 14*b* which, when released, is under tension so as to normally pass between the two portions 8*b* and 10*b* but is adapted to engage the hook end of the portion 4*b* in the cocked position.

With this form of the invention the tubing 15*b* which is carrying fluid to the receptacdle 21 is laid over the portions 8*b* and 10*b* and between these and the trigger element 14*b*. As the load in the receptacle 21 increases the trigger 14*b* is released from the hook on portion 4*b* and snaps toward the trigger elements 8*b* and 10*b* clamping the tubing 15*b* to shut off the flow.

This invention is of the scope set forth in the appended claims.

I claim:

1. An automatic shutoff device for a tubing passing liquid to a container suspended by the device, which comprises two attachment elements on the device, one for attaching a container to the device and the other for mounting the device, the device including means for yieldingly holding the attaching elements together permitting the distance between the elements to increase with increase of the suspended load, and tubing clamping means normally retained in the open position and releasable at a predetermined load to move to a position cutting off flow through said tubing.

2. An automatic shutoff device for a tubing passing liquid to a container suspended by the device, which comprises a member at one end of the device for attaching a container to the device, a member at the other end of the device by which the device may be supported, a spring connection between said members by means of which the distance between said members increases with the increase of the suspended load, and a tubing clamping element normally retained in the open position and actuated by a predetermined increase in separation between said members to move to engage said tubing and cut off flow therethrough.

3. An automatic shutoff device for a tubing passing liquid to a container suspended by said device, said device comprising a piece of spring wire shaped at the upper end to provide an element for support of the device, said wire being shaped at the lower end to provide a member for suspending a container, the wire between said members providing a flexible spring connection between said members which will permit the separation between the same to progressively increase with increasing load, the wire also being shaped to provide a tubing shutoff clamp, and said tubing shutoff clamp being normally retained in an open position being actuated at a predetermined separation of said members at the closed position.

4. An automatic shutoff device for a tubing passing liquid to a container suspended by said device, which comprises a piece of spring wire shaped at its upper end to provide a suspension hook, below said suspension hook said wire forming a shoulder and a resilient expansion element, below said element the wire being shaped to provide a V-type tubing clamp, and at the lower end the wire being formed to provide a hook for suspending a container from the device, one part of the tubing clamp being normally in engagement with said shoulder to retain the tubing clamp in the open position and being disengageable from the tubing clamp for spring movement to closed position at a predetermined load.

5. An automatic shutoff device for a tubing passing liquid to a container suspended by said device, which comprises a member for suspension of the device at one end, a member for suspension of a load at the other end, spring means interconnecting said members to permit an increased separation of the members with increased load, a pair of parallel spaced-apart upwardly rising tubing clamping members, a trigger member movable therebetween in tubing shutoff operation and movable to a cocked position, means forming a shoulder for normally holding the trigger member in cocked position, the trigger member being supported adjacent the lower suspension element, and adapted to be released from said shoulder on increase of separation between said suspension elements.

References Cited in the file of this patent

UNITED STATES PATENTS

576,685	Newcomb	Feb. 9, 1897
606,559	Knottnerus	June 8, 1898
733,290	Simon	July 7, 1903
1,495,724	Blake	May 23, 1924
2,610,019	Beall	Sept. 9, 1952