(12) INTERNATIONAL APPLICATION PUBLISHED UNDER THE PATENT COOPERATION TREATY (PCT)

(19) World Intellectual Property Organization
International Bureau

(43) International Publication Date
09 March 2023 (09.03.2023)

WIPO | PCT

(10) International Publication Number
WO 2023/033869 A1

(51) International Patent Classification:
A61C 7/00 (2006.01) *A61C 7/20* (2006.01)
A61C 7/12 (2006.01) *A61C 9/00* (2006.01)
A61C 7/14 (2006.01) *B33Y 10/00* (2015.01)

(21) International Application Number:
PCT/US2022/019619

(22) International Filing Date:
09 March 2022 (09.03.2022)

(25) Filing Language: English

(26) Publication Language: English

(30) Priority Data:
63/240,693 03 September 2021 (03.09.2021) US
63/316,929 04 March 2022 (04.03.2022) US

(71) Applicant: **SWIFT HEALTH SYSTEMS INC.** [US/US]; 111 Academy Dr., Suite 150, Irvine, California 92617 (US).

(72) Inventors: **ODA, Todd**; 111 Academy Dr., Suite 150, Irvine, California 92617 (US). **CHUNG, Alston**; 111 Academy Dr., Suite 150, Irvine, California 92617 (US). **RODRIGUEZ, Andres**; 111 Academy Dr., Suite 150, Irvine, California 92617 (US). **FARZIN-NIA, Farrokh**; 111 Academy Dr., Suite 150, Irvine, California 92617 (US).

(74) Agent: **ALTMAN, Daniel, E.**; Knobbe Martens, 2040 Main Street, 14th Floor, Irvine, California 92614 (US).

(81) Designated States *(unless otherwise indicated, for every kind of national protection available)*: AE, AG, AL, AM, AO, AT, AU, AZ, BA, BB, BG, BH, BN, BR, BW, BY, BZ, CA, CH, CL, CN, CO, CR, CU, CZ, DE, DJ, DK, DM, DO, DZ, EC, EE, EG, ES, FI, GB, GD, GE, GH, GM, GT, HN, HR, HU, ID, IL, IN, IR, IS, IT, JM, JO, JP, KE, KG, KH, KN, KP, KR, KW, KZ, LA, LC, LK, LR, LS, LU, LY, MA, MD, ME, MG, MK, MN, MW, MX, MY, MZ, NA, NG, NI, NO, NZ, OM, PA, PE, PG, PH, PL, PT, QA, RO, RS, RU, RW, SA, SC, SD, SE, SG, SK, SL, ST, SV, SY, TH, TJ, TM, TN, TR, TT, TZ, UA, UG, US, UZ, VC, VN, WS, ZA, ZM, ZW.

(84) Designated States *(unless otherwise indicated, for every kind of regional protection available)*: ARIPO (BW, GH, GM, KE, LR, LS, MW, MZ, NA, RW, SD, SL, ST, SZ, TZ, UG, ZM, ZW), Eurasian (AM, AZ, BY, KG, KZ, RU, TJ, TM), European (AL, AT, BE, BG, CH, CY, CZ, DE, DK, EE, ES, FI, FR, GB, GR, HR, HU, IE, IS, IT, LT, LU, LV, MC, MK, MT, NL, NO, PL, PT, RO, RS, SE, SI, SK, SM, TR), OAPI (BF, BJ, CF, CG, CI, CM, GA, GN, GQ, GW, KM, ML, MR, NE, SN, TD, TG).

Declarations under Rule 4.17:
— *as to applicant's entitlement to apply for and be granted a patent (Rule 4.17(ii))*
— *as to the applicant's entitlement to claim the priority of the earlier application (Rule 4.17(iii))*

Published:
— *with international search report (Art. 21(3))*

(54) Title: ORTHODONTIC APPLIANCE WITH NON-SLIDING ARCHFORM

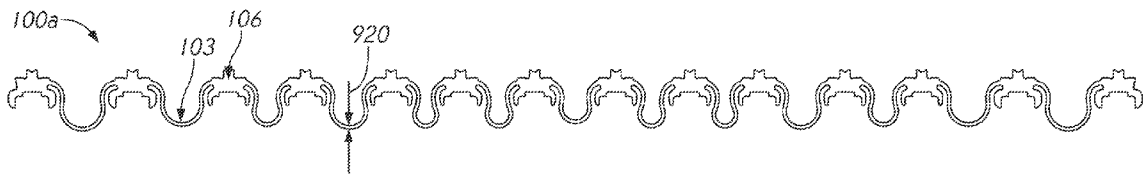

FIG. 20A

(57) Abstract: An orthodontic bracket and archform system that uses friction–free mechanics are disclosed. The archform can have a male fastener that can be retained within an orthodontic bracket. The orthodontic bracket can have varying locking mechanism, such as deflectable tabs, springs, locking pins, and others, that can cooperate with features of the male fastener to prevent sliding between the archform and the bracket.

WO 2023/033869 A1

ORTHODONTIC APPLIANCE WITH NON-SLIDING ARCHFORM

CROSS REFERENCE TO RELATED APPLICATIONS

[0001] This application claims priority to U.S. Provisional Patent Application No. 63/240,693, filed September 3, 2021, and U.S. Provisional Patent Application No. 63/316,929, filed March 4, 2022, which are incorporated herein by reference in their entireties. Any and all applications, if any, for which a foreign or domestic priority claim is identified in the Application Data Sheet of the present application is hereby incorporated by reference under 37 CFR 1.57.

BACKGROUND

Field

[0002] The present disclosure relates in some aspects to orthodontic appliances, including orthodontic brackets and non-sliding archforms.

SUMMARY

[0003] In some variants, an orthodontic bracket is disclosed herein that can be disposed on a patient's tooth. The orthodontic bracket can include a slot that can receive a male fastener of an archform. The orthodontic bracket can include a stop that can be disposed on a gingival side of the bracket that can prevent movement of the male fastener in the gingival direction. The orthodontic bracket can include a retainer disposed on an occlusal side of the bracket that can prevent movement of the male fastener in the occlusal, mesial, and/or distal directions. The retainer can include a locking pin that can deflect to facilitate the male fastener being inserted into or removed from the slot.

[0004] In some variants, the stop can include an overhang that can retain the male fastener within the slot.

[0005] In some variants, the retainer can include walls that can be disposed on mesial and distal sides of the orthodontic bracket.

[0006] In some variants, the locking pin can include a fixed end in one of the walls of the retainer and a free end that can be moveably disposed within an aperture of the other wall of the retainer. The free end can deflect in the occlusal direction to permit the male fastener to be positioned thereunder or to permit the male fastener to be removed from thereunder.

[0007] In some variants, the aperture of the wall of the retainer can include a locking portion that can retain the free end of the locking pin therein when the male fastener is disposed under the locking pin.

[0008] In some variants, the bracket can include a face and a protrusion. The protrusion can extend away from the face and can push the male fastener against the retainer and locking pin to prevent sliding between the archform and the bracket.

[0009] In some variants, the male fastener can include arms that are configured to flex under a load.

[0010] In some variants, the male fastener can include a space separating the arms.

[0011] In some variants, the orthodontic bracket can include a block extending into the space and between the arms. The block can prevent excessive deflection of the arms.

[0012] In some variants, the archform can include interproximal loops on opposing sides of the male fastener.

[0013] In some variants, the male fastener can include a tab that can be positioned under the locking pin.

[0014] In some variants, the male fastener can include a groove that can interface with a tool for insertion and removal of the male fastener from within a slot of the bracket.

[0015] In some variants, a method of coupling an archform to a bracket is disclosed herein. The method can include angling a male fastener of the archform relative to a face of the bracket. The method can include inserting a portion of the male fastener into a slot of the bracket and against a stop disposed on a gingival side of the bracket. The method can include positioning a tab portion of the male fastener onto a locking pin supported by a retainer disposed on an occlusal side of the bracket. The method can include inserting a tool between the locking pin and a groove disposed on the tab of the male fastener. The method can include rotating the tool toward the stop of the bracket such that the locking pin deflects to enable the tab portion of the male fastener to be positioned thereunder.

[0016] In some variants, rotating the tool toward the stop of the bracket rotates the male fastener toward the face of the bracket.

[0017] In some variants, rotating the tool toward the stop of the bracket applies a force to the groove disposed on the tab to deflect arms of the male fastener.

[0018] In some variants, an orthodontic bracket is disclosed herein that can be disposed on a patient's tooth. The orthodontic bracket can include a slot that can receive a male fastener of an archform. The orthodontic bracket can include a stop disposed on a gingival side of the bracket that can prevent movement of the male fastener in the gingival direction. The orthodontic bracket can include a retainer disposed on an occlusal side of the bracket that can prevent movement of the male fastener in the occlusal, mesial, and/or distal directions. The retainer can include a C spring that can deflect to facilitate the male fastener being inserted into or removed from the slot.

[0019] In some variants, a central axis of the C spring extends in the mesio-distal direction.

[0020] In some variants, an end of the C spring can be fixedly positioned within a slot of the retainer and a free end of the C spring can be free to deflect.

[0021] In some variants, the free end of the C spring can retain a tab of the male fastener thereunder.

[0022] In some variants, the retainer can include a groove that can provide access to the C spring.

[0023] In some variants, bracket can include a face and a protrusion. The protrusion can extend away from the face and can push the male fastener against the free end of the C spring and an overhang of the stop.

[0024] In some variants, the male fastener can include arms that can flex under a load.

[0025] In some variants, the male fastener can include a space separating the arms.

[0026] In some variants, the archform can include interproximal loops on opposing sides of the male fastener.

[0027] In some variants, the male fastener can include a groove that can interface with a tool for insertion and removal of the male fastener from within the slot of the bracket.

[0028] In some variants, the bracket can include a protrusion that can push the male fastener against a free end of the C spring and an overhang of the stop to reduce sliding between the archform and the bracket.

[0029] In some variants, a method of coupling an archform to a bracket is disclosed herein. The method can include angling a male fastener of the archform relative to a face of the bracket. The method can include inserting a portion of the male

fastener into a slot of the bracket and against a stop disposed on a gingival side of the bracket;. The method can include positioning a tab portion of the male fastener against a portion of a C spring disposed within a retainer on an occlusal side of the bracket. The method can include inserting a tool between a groove disposed on the tab of the male fastener and a groove disposed on the retainer such that the tool is contact the C spring. The method can include pushing the tool toward a surface of the bracket and into the C spring while rotating the tool toward the stop of the bracket such that a free end of the C spring deflects to enable the tab portion of the male fastener to be positioned thereunder.

[0030] In some variants, rotating the tool toward the stop of the bracket rotates the male fastener toward the face of the bracket.

[0031] In some variants, rotating the tool toward the stop of the bracket applies a force to the groove disposed on the tab to deflect arms of the male fastener.

[0032] In some variants, an orthodontic bracket is disclosed herein that can be disposed on a patient's tooth. The orthodontic bracket can include a slot that can receive a male fastener of an archform. The orthodontic bracket can include a retainer that can be disposed on a gingival side of the bracket. The retainer can include a C spring that can deflect to facilitate the male fastener being retained within or removed from the slot. The orthodontic bracket can include a stop disposed on an occlusal side of the bracket that can prevent movement of the male fastener in an occlusal direction.

[0033] In some variants, the C spring can be oriented perpendicular to a face of the bracket.

[0034] In some variants, the C spring can be within an opening of the retainer that can facilitate flexing of the C spring. The C spring can be retained on a guide.

[0035] In some variants, the opening can be oval shaped and can prevent over deflection of the C spring.

[0036] In some variants, the C spring can provide a force to the male fastener to secure the male fastener within the slot of the bracket.

[0037] In some variants, the stop can include undercuts that can receive portions of the male fastener. The C spring can apply a force to the male fastener to secure the portion of the male fastener within the undercuts.

[0038] In some variants, the portions of the male fastener can be wedges.

[0039] In some variants, the wedges can be formed by waterjet cutting the male fastener.

[0040] In some variants, the male fastener can include angled surfaces and/or recesses that can enable the male fastener to be positioned within the slot at an angle.

[0041] In some variants, the male fastener can include a handle that can be gripped by pliers. The handle, if damaged by the pliers, may not negatively affect performance of the archform.

[0042] In some variants, the handle can include a hole that can receive a tool for maneuvering the male fastener.

[0043] In some variants, the archform can include interproximal loops on opposing sides of the male fastener.

[0044] In some variants, portions of the archform that are proximate the male fastener can interface with mesial and distal sides of the bracket.

[0045] In some variants, the portions of the archform that are proximate the male fastener can prevent lateral sliding between the male fastener and the archform.

[0046] In some variants, a method of coupling an archform to a bracket is disclosed herein. In some variants, the method can include angling a male fastener of the archform relative to a face of the bracket. The method can include inserting a portion of the male fastener into a slot of the bracket and against a C spring disposed within a retainer. The retainer can be positioned on a gingival side of the bracket. The method can include applying a force to the male fastener such that the male fastener pushes against the C spring such that the C spring flexes. The method can include rotating the male fastener toward a face of the bracket. The method can include ceasing to apply a force to the male fastener such that the C spring pushes portions of the male fastener into cut outs in stops disposed on the occlusal side of the bracket such that the male fastener is secured within the bracket.

[0047] In some variants, the method can include grasping a handle of the male fastener to manipulate the male fastener.

[0048] In some variants, the method can include inserting a tool into a hole within a handle of the male fastener to manipulate the male fastener.

[0049] In some variants, an orthodontic archform is disclosed herein. The orthodontic archform can include a plurality of bracket connectors that can connect to respective brackets. The orthodontic archform can include a plurality of interproximal structures in between at least 50% of adjacent pairs of the plurality of bracket connectors. The plurality of interproximal structures can deflect when the bracket connectors are connected to the respective brackets, thus causing orthodontic tooth movement. The

bracket connectors can include a plurality of struts joined by a central member and circumscribing a void region. The central member can include a handle element extending away from the central member. The handle element can allow a tool to grip the handle and insert the archform into respective brackets.

[0050] In some variants, the handle element can include an aperture.

[0051] In some variants, the interproximal structures can include loop(s).

[0052] In some variants, the central segment can include a curved surface opposite a surface from which the handle element extends.

[0053] In some variants, the handle element can be arch-shaped.

[0054] In some variants, at least two of the plurality of interproximal structures can include different geometries.

[0055] In some variants, the archform can be formed from a ribbon-shaped material.

[0056] In some variants, an orthodontic bracket is disclosed herein that can be disposed on a patient's tooth. The orthodontic bracket can include a channel that can be disposed between a mesial wall and distal wall of the bracket. The orthodontic bracket can include a slot at least partially formed by a stop disposed on a gingival side of the bracket. The channel can guide a male fastener into the slot. The orthodontic bracket can include a deflectable tab disposed on a surface of the bracket. The deflectable tab can interface with one or more surfaces of a male fastener of an archform to secure the male fastener to the archform.

[0057] In some variants, the stop can include an overhang that can retain the male fastener within the slot.

[0058] In some variants, the stop has recesses and/or angled surfaces that can allow the male fastener to be rotated within the slot during insertion and/or removal.

[0059] In some variants, the bracket can have more than one engagement stage such that the male fastener can be retained within the slot at different positions.

[0060] In some variants, the deflectable tab can engage with different surfaces of the male fastener to retain the male fastener at varied depths.

[0061] In some variants, the male fastener can be retained at varied depths within the slot.

[0062] In some variants, a method of coupling an archform to a bracket is disclosed herein. The method can include positioning a male fastener of an archform on the face of a bracket between mesial and distal walls. The method can include advancing

the male fastener toward a slot at least partially defined by a stop disposed on a gingival side of the bracket such that a tab disposed on the face of the bracket engages with surfaces of a guiding channel within the male fastener of the archform to engage a holding surface such that the male fastener is securely retained within the slot.

[0063] In some variants, the method can include engaging the male fastener with a wedge disposed on an overhang of the slot to secure the male fastener therein to eliminate and/or reduce play between the male fastener and the bracket.

[0064] In some variants, the method can include positioning the male fastener at one of a plurality of engagement stages. The clinician selects between the plurality of engagement stages based on desired tooth control.

[0065] In some variants, the method can include a method of decoupling an archform from a bracket. In some variants, the method can include inserting a tool into a tool receiving recess disposed on a face of the bracket and moving the tool in a generally occlusal direction through a tool receiving channel of a male fastener of the archform. The tool can be guided to engage with and deflect a tab of the bracket away from a holding surface of the male fastener of the archform such that the male fastener can be moved in an occlusal direction. The tool can engage with a periphery of the tool receiving channel to move the male fastener in the occlusal direction and out of a slot of the bracket.

[0066] In some variants, a tool for installing and removing a male fastener of an archform into or from a bracket is disclosed herein. The tool can include a shaft and conical tip that can be disposed on a distal end of the shaft. The shaft and conical tip can apply equal and opposite forces to the male fastener and bracket during installation and removal.

[0067] In some variants, an orthodontic bracket assembly is disclosed herein that can be disposed on a patient's tooth. The orthodontic bracket assembly can include a pad that can be bonded to the patient's tooth. The pad can include a pocket that can receive a bracket. The bracket can be coupled to the pad. The bracket can include a slot that can receive a male fastener of an archform. The bracket can include a retainer disposed on a gingival side of the bracket. The retainer can include a C spring that can deflect to facilitate the male fastener being retained within or removed from the slot. The bracket can include one or more stops disposed on an occlusal side of the bracket that can prevent movement of the male fastener in an occlusal direction.

[0068] In some variants, the pad can include undercuts that can be disposed on an opposing side of the pad relative to the pocket. The undercuts can facilitate bonding the pad to a tooth of the patient.

[0069] In some variants, the pad can include filling material that can be used to laser weld the bracket to the pad.

[0070] In some variants, the one or more stops can include ramps that can contact wedges of the male fastener when the male fastener is positioned within the slot of the bracket.

[0071] In some variants, the one or more stops can include cutouts that can receive at least a portion of wedges of the male fastener.

[0072] In some variants, the pad can include a protrusion that can be inserted through an aperture of the bracket and welded to the bracket.

[0073] In some variants, the bracket can include a protrusion disposed on a face of the bracket that can push a male fastener against the retainer to retain the male fastener within the slot of the bracket.

[0074] In some variants, the pad can include bumps that are disposed on opposing sides of the pocket that can push the male fastener against the retainer.

[0075] In some variants, the pad can include inclined surfaces configured to engage portions of the male fastener to provide rotational control.

[0076] In some variants, the pad can angle the bracket such that the male fastener is angled relative to the surface of the patient's tooth with the male fastener retained in the bracket.

[0077] In some variants, the male fastener can be angled at ten degrees relative to the surface of the patient's tooth with the male fastener retained in the bracket.

[0078] In some variants, the male fastener can be angled at five degrees relative to the surface of the patient's tooth with the male fastener retained in the bracket.

[0079] In some variants, the pad can be customized to the patient's tooth and the bracket may not be customized.

[0080] In some variants, the archform can include hooks that can interface with elastics.

[0081] In some variants, the bracket can include features that can prevent the C spring from deflecting past an elastic limit of the C spring.

[0082] In some variants, the C spring can be disposed around a guide that orients the C spring and prevents deflection past the elastic limit.

[0083] In some variants, a surface of the bracket can engage with a surface of the male fastener to prevent deflection past the elastic limit of the C spring.

[0084] In some variants, a method of treating malocclusion is disclosed herein. The method can include forming pads customized to teeth of a patient. The method can include coupling the customized pads to the teeth of the patient. The method can include coupling one of a plurality of first style brackets to each of the customized pads coupled to lower anterior teeth of the patient. The method can include coupling one of a plurality of second style brackets to the customized pads coupled to other teeth of the patient. The method can include coupling a male fastener of an archform to each of the plurality of first style brackets and each of the plurality of second style brackets.

[0085] In some variants, the method can include forming hooks in the archform for use with elastics.

[0086] In some variants, coupling a male fastener of the archform to each of the plurality of first style brackets and each of the plurality of second style brackets can include grasping a handle of the male fastener with forceps; positioning a portion of the male fastener opposite the handle against an oval spring of the bracket such that the male fastener is angled relative to the bracket; gripping an occlusal surface of the male fastener and gingival surface of the bracket between forceps; squeezing the forceps to push the male fastener against the oval spring of the bracket such that the oval spring deflects; rotating the male fastener towards the bracket; and/or releasing the forceps to allow the oval spring to push the male fastener against and under stops of the bracket to securely retain the male fastener in the bracket.

[0087] In some variants, an orthodontic bracket that can be disposed on a patient's tooth is disclosed herein. The orthodontic bracket can include a slot that can receive a male fastener of an archform. The orthodontic bracket can include a retainer that can be disposed on a gingival side of the bracket. The retainer can include a C spring that can deflect to facilitate the male fastener being retained within or removed from the slot and a protrusion that can engage with an installation tool. The retainer can include one or more stops disposed on an occlusal side of the bracket that can prevent movement of the male fastener in an occlusal direction.

[0088] In some variants, the orthodontic bracket can include undercuts that can facilitate bonding the bracket to a tooth of the patient.

[0089] In some variants, the one or more stops can include ramps that can contact wedges of the male fastener when the male fastener is positioned within the slot of the bracket.

[0090] In some variants, the one or more stops can include cutouts that can receive at least a portion of the male fastener.

[0091] In some variants, the bracket can include a protrusion that can be disposed on a face of the bracket that can push a male fastener against the retainer to retain the male fastener within the slot of the bracket.

[0092] In some variants, the archform can include interproximal loops configured to interface with elastics.

[0093] In some variants, the archform can include a tongue that can be disposed between the one or more stops of the bracket.

[0094] In some variants, the archform can include two arms that can engage with mesial and distal sides of the retainer of the bracket.

[0095] In some variants, the archform can include curves that can engage with the retainer of the bracket to provide rotational control of the patient's tooth.

[0096] In some variants, an archform configured to be disposed around at least a portion of an arch of a patient's mouth is disclosed herein. The archform can include a plurality of male fasteners that can be positioned within brackets disposed on teeth of the patient. The male fastener can include a tongue configured to be disposed between stops of the bracket and two arms disposed on mesial and distal sides of the male fastener and extending in a direction opposite the tongue. The two arms can engage features of the bracket to secure the male fastener relative to the bracket. The archform can include a plurality of interproximal loops. The interproximal loops can be disposed between adjacent male fasteners of the plurality of male fasteners.

[0097] In some variants, the archform can include curves disposed on mesial and distal sides of the male fastener.

[0098] In some variants, the two arms can each include flanges that can extend inward to engage the features of the bracket.

[0099] In some variants, the archform can include one or more symbols disposed on the interproximal loops.

[0100] In some variants, the symbols can be letters configured to convey a message.

[0101] In some variants, an orthodontic appliance that can be disposed around at least a portion of an arch of a patient's mouth is disclosed herein. In some variants, the orthodontic appliance can include an archform that can include a plurality of male fasteners that can be coupled to respective teeth of the patient and interproximal loops. The interproximal loops can be disposed between adjacent male fasteners. The orthodontic appliance can include a mounting pad that can be disposed between one of the plurality of male fasteners and one of the respective teeth of the patient. The mounting pad can include a first adhesive surface and a second adhesive surface. The first adhesive surface can be adhered to the one of the plurality of male fasteners and the second adhesive surface can be adhered to the one of the respective teeth of the patient such that the male fastener can be coupled to the one of the respective teeth of the patient.

[0102] In some variants, the orthodontic appliance can include a protective layer that can be removably disposed on the second adhesive surface to protect the second adhesive surface from contamination before installation of the orthodontic appliance around at least a portion of the arch of the patient's mouth.

[0103] In some variants, an adhesive bond between the second adhesive surface of the mounting pad and the one of the respective teeth of the patient can be broken when the mounting pad is pulled.

[0104] In some variants, the adhesive bond between the second adhesive surface of the mounting pad and the one of the respective teeth of the patient can be broken when the mounting pad is pulled in a lingual direction.

[0105] In some variants, the adhesive bond between the second adhesive surface of the mounting pad and the one of the respective teeth of the patient can be broken when the mounting pad is pulled in a direction parallel to a surface of the one of the respective teeth.

[0106] In some variants, a portion of the mounting pad can extend beyond a periphery of the male fastener. The portion being configured to be pulled.

[0107] In some variants, the portion of the mounting pad can include a hole that can interface with a tool to facilitate pulling of the mounting pad.

[0108] In some variants, the archform can include symbols that can be seen by an observer after installation in the mouth of the patient.

[0109] In some variants, the orthodontic appliance can include caps that can be coupled to a labial surface of the teeth of the patient to conceal features of the orthodontic appliance.

[0110] In some variants, an adhesive on the second adhesive surface of the mounting pad can include a whitening solution to whiten the teeth of the patient.

[0111] In some variants, the caps can be adhered to the labial surface of the teeth with an adhesive. The adhesive can include a whitening solution to whiten the teeth of the patient.

[0112] In some variants, the orthodontic appliance can include a soluble tray that can hold the archform in a configuration for installation in the mouth of the patient. The soluble tray can be dissolved after the archform is installed in the mouth of the patient.

[0113] In some variants, the archform can be formed based on 3D scans of the patient's mouth. The 3D scans can be performed by a mobile device.

[0114] In some variants, a device configured to operatively connect to the mobile device of the user facilitates performing the 3D scan.

[0115] In some variants, the archform can become malleable when exposed to temperatures below or above body temperature. Estimated body temperature can be a single temperature or range of temperatures (e.g., upper and lower limits). For example, in some variants, the archform can become malleable at and/or above ninety-nine, one hundred, one hundred and one, or one hundred and two or more degrees Fahrenheit. In some variants, the archform can become malleable at and/or below ninety-seven, ninety-six, or ninety-five or less degrees Fahrenheit.

[0116] In some variants, a method of installing an orthodontic appliance configured to be disposed around at least a portion of an arch of a patient's mouth is disclosed herein. The method can include removing a protective layer to expose an adhesive surface of a mounting pad. The mounting pad can be coupled to one of a plurality of male fasteners of an archform. The method can include positioning the adhesive surface against a surface of a tooth of the patient such that the adhesive surface of the mounting pad adheres to the surface of the tooth of the patient.

[0117] In some variants, the method can include inserting the archform into the mouth of the patient with the archform in a soluble tray that can hold the archform in a configuration for installation.

[0118] In some variants, the method can include flushing the mouth of the patient with a liquid to dissolve the soluble tray.

[0119] In some variants, the method can include adhering caps to labial surfaces of teeth of the patient to conceal features of the archform.

[0120] In some variants, the method can be performed by the patient.

[0121] In some variants, a method of manufacturing an archform is disclosed herein. The method can include performing a 3D scan of a mouth of a patient with a mobile device of the patient. The method can include sending data from the 3D scan of the mouth of the patient to a data center of a designer of orthodontic appliances. The method can include forming an archform based on the data from the 3D scan of the mouth of the patient. The archform can be shaped corresponding to a maloccluded state of teeth of the patient. The archform can move the teeth of the patient from the maloccluded state to another state.

[0122] In some variants, the method can include disposing the archform in a soluble tray that can maintain the archform in the shape corresponding to the maloccluded state. The soluble tray can dissolve in a liquid.

[0123] In some variants, the method can include adhering a mounting pad to a male fastener of the archform. The mounting pad can include an adhesive surface that can adhere to a surface of the teeth of the patient.

[0124] In some variants, the method can include covering the adhesive surface with a removable protective layer.

[0125] In some variants, an orthodontic bracket that can be disposed on a patient's tooth is disclosed herein. The orthodontic bracket can have a slot that can receive a connector of an archform such that the connector does not slide in a mesial-distal direction relative to the orthodontic bracket. The orthodontic bracket can have a stop that can be disposed on an occlusal side of the slot that can prevent movement of the connector in at least an occlusal direction. The orthodontic bracket can have a retainer that can be disposed on a gingival side of the slot that can prevent movement of the connector in at least a gingival direction. The retainer can include a spring that that can deflect to facilitate the connector being inserted into or removed from the slot. The spring can apply a force to the connector to lock the connector within the slot of the bracket.

[0126] In some variants, the spring is a C spring.

[0127] In some variants, the spring can be disposed within an opening of the retainer.

[0128] In some variants, the orthodontic bracket can include two stops disposed on the occlusal side of the bracket. The two stops can be separated by a gap. In some variants, the gap can receive a tab of the connector.

[0129] In some variants, the orthodontic bracket can include a protrusion that can be disposed on a face of the bracket. The protrusion can push the connector against an overhang of the retainer.

[0130] In some variants, the orthodontic bracket can include a ramp that can be disposed on a face of the bracket. The ramp can push the connector against an overhang of the stop.

[0131] In some variants, the orthodontic bracket can include a textured surface that can bond to a surface of a tooth.

[0132] In some variants, the orthodontic bracket can include lateral wings extending in a mesial-distal directions. The lateral wings can bond to a surface of a tooth to facilitate rotational control.

[0133] In some variants, an orthodontic appliance is disclosed herein. The orthodontic appliance can include a plurality of orthodontic brackets. Each orthodontic bracket of the plurality of orthodontic brackets can be disposed on a tooth of the patient. Each orthodontic bracket can include a slot, a stop disposed on an occlusal side of the slot, and/or a retainer disposed on a gingival side of the slot. The retainer can have a spring. The orthodontic appliance can include an archform that can move the patient's teeth from a first position to a second positon. The archform can include a plurality of connectors. Each connector of the plurality of connectors can be placed within the slot between the stop and the retainer of one orthodontic bracket of the plurality of orthodontic brackets such that the spring applies a force against the connector to push the connector against the stop, securing at least a portion of the connector behind the stop and retainer in a locked configuration. The archform can include a plurality of interproximal structures. At least one interproximal structure of the plurality of interproximal structures can be positioned between at least some adjacent connectors of the plurality of connectors. The plurality of connectors do not slide in a mesial-distal direction relative to the plurality of orthodontic brackets when the plurality of connectors are in locked configurations within the slots of the plurality of orthodontic brackets. The plurality of interproximal structures can apply a force to adjacent connectors of the plurality of connectors to move one or more teeth of the patient.

[0134] In some variants, the spring is a C spring.

[0135] In some variants, the spring is disposed within an opening of the retainer.

[0136] In some variants, each orthodontic bracket of the plurality of orthodontic brackets can include two stops disposed on the occlusal side of the bracket. The two stops can be separated by a gap.

[0137] In some variants, the gap can receive a tab of one connector of the plurality of connectors.

[0138] In some variants, each orthodontic bracket of the plurality of orthodontic brackets can include a protrusion that can be disposed on a face thereof. The protrusion can push the connector received within the slot against an overhang of the retainer.

[0139] In some variants, each orthodontic bracket of the plurality of orthodontic brackets can include a ramp that can be disposed on a face thereof. The ramp can push the connector received within the slot against an overhang of the stop.

[0140] In some variants, each orthodontic bracket of the plurality of orthodontic brackets can include a textured surface that can bond to a surface of a tooth.

[0141] In some variants, at least one orthodontic bracket of the plurality of orthodontic brackets can include lateral wings that can extend in a mesial-distal directions. The lateral wings can bond to a surface of a tooth to facilitate rotational control.

[0142] In some variants, at least one connector of the plurality of connectors can include a pair of arms that can grip mesial and distal sides of the retainer.

[0143] In some variants, each orthodontic bracket of the plurality of orthodontic brackets can include two stops that can be disposed on the occlusal side of the bracket. The two stops can be separated by a gap. Each connector of the plurality of connectors can include a tab that can be placed within the gap.

[0144] In some variants, the tab can include a groove that can contact a tool to facilitate insertion and/or removal of the plurality connectors from the slots of the plurality of orthodontic brackets.

[0145] In some variants, a rigidity of the interproximal structures can be greater at distal ends of the archform compared to a central portion.

[0146] In some variants, the plurality of interproximal structures can include interproximal loops.

[0147] In some variants, the archform can be formed from a sheet of material.

[0148] In some variants, opposing sides of the archform can be parallel to each other.

[0149] In some variants, a method of coupling an archform to a bracket is disclosed herein. The method can include angling a connector of the archform relative to a face of the bracket. The method can include inserting a portion of the connector into a slot of the bracket and against a C spring disposed within a retainer. The retainer can be positioned on a gingival side of the bracket. The method can include applying a force to the connector such that the connector pushes against the C spring so that the C spring flexes. The method can include rotating the connector toward a face of the bracket. The method can include ceasing to apply a force to the connector such that the C spring pushes portions of the connector against stops of the bracket such that the connector is secured under at least a portion of the stops and the retainer.

[0150] In some variants, a method of moving a patient's teeth is disclosed herein. The method can include bonding one or more brackets to a patient's teeth. The method can include coupling a first archform to the one or more brackets. The first archform can have a first plurality of interproximal loops. A first interproximal loop of the plurality of first interproximal loops can have a first width. The method can include decoupling the first archform from the one or more brackets. The method can include coupling a second archform to the one or more brackets. The second archform can have a second plurality of interproximal loops corresponding to the first plurality of interproximal loops. A second interproximal loop of the plurality of second interproximal loops, corresponding to the first interproximal loop, can have a second width that can be greater than the first width.

[0151] In some variants, the method can include cutting the first and second archforms from a flat sheet of material.

[0152] In some variants, an orthodontic bracket configured to be disposed on a patient's tooth is disclosed herein. The orthodontic bracket can include a slot that can receive a connector of an archform such that the connector does not slide in a mesial-distal direction relative to the orthodontic bracket. The orthodontic bracket can include a stop disposed on a first side of the slot that can prevent movement of the connector in at least a first direction. The orthodontic bracket can include a retainer disposed on a second side of the slot that can prevent movement of the connector in at least a second direction. The retainer can include a spring that can deflect to facilitate the connector being inserted into or removed from the slot. The spring can apply a force to the connector to lock the connector within the slot of the bracket.

[0153] In some variants, the spring is a C spring.

[0154] In some variants, the spring can be disposed within an opening of the retainer.

[0155] In some variants, the bracket can include two stops disposed on the second side of the bracket. The two stops can be separated by a gap.

[0156] In some variants, the gap can receive a tab of the connector.

[0157] In some variants, the bracket can include a protrusion disposed on a face of the bracket. The protrusion can push the connector against an overhang of the retainer.

[0158] In some variants, the bracket can include a ramp that can be disposed on a face of the bracket. The ramp can push the connector against an overhang of the stop.

[0159] In some variants, the bracket can include a textured surface that can bond to a surface of a tooth.

[0160] In some variants, the bracket can include lateral wings extending in a mesial-distal directions. The lateral wings can bond to a surface of a tooth to facilitate rotational control.

[0161] In some variants, an orthodontic appliance is disclosed herein. The orthodontic application can include a plurality of orthodontic brackets. Each orthodontic bracket of the plurality of orthodontic brackets can be disposed on a tooth of the patient. Each orthodontic bracket can include a slot. Each orthodontic bracket can include a stop disposed on a first side of the slot. Each orthodontic bracket can include a retainer disposed on a second side of the slot. The retainer can include a spring. The orthodontic appliance can include an archform that can move the patient's teeth from a first position to a second positon. The archform can include a plurality of connectors. Each connector of the plurality of connectors can be placed within the slot between the stop and the retainer of one orthodontic bracket of the plurality of orthodontic brackets such that the spring applies a force against the connector to push the connector against the stop, securing at least a portion of the connector behind the stop and retainer in a locked configuration. The archform can include a plurality of interproximal structures. At least one interproximal structure of the plurality of interproximal structures can be positioned between at least some adjacent connectors of the plurality of connectors. The plurality of connectors may not slide in a mesial-distal direction relative to the plurality of orthodontic brackets when the plurality of connectors are in locked configurations within the slots of the plurality of orthodontic brackets. The plurality of interproximal structures

can apply a force to adjacent connectors of the plurality of connectors to move one or more teeth of the patient.

[0162] In some variants, the spring can be a C spring.

[0163] In some variants, the spring can be disposed within an opening of the retainer.

[0164] In some variants, each orthodontic bracket of the plurality of orthodontic brackets can include two stops that can be disposed on the second side of the bracket. The two stops can be separated by a gap.

[0165] In some variants, the gap can receive a tab of one connector of the plurality of connectors.

[0166] In some variants, each orthodontic bracket of the plurality of orthodontic brackets can include a protrusion disposed on a face thereof. The protrusion can push the connector received within the slot against an overhang of the retainer.

[0167] In some variants, each orthodontic bracket of the plurality of orthodontic brackets can include a ramp that can be disposed on a face thereof. The ramp can push the connector received within the slot against an overhang of the stop.

[0168] In some variants, each orthodontic bracket of the plurality of orthodontic brackets can include a textured surface that can bond to a surface of a tooth.

[0169] In some variants, at least one orthodontic bracket of the plurality of orthodontic brackets can include lateral wings that can extend in mesial-distal directions. The lateral wings can bond to a surface of a tooth to facilitate rotational control.

[0170] In some variants, at least one connector of the plurality of connectors can include a pair of arms configured to grip mesial and distal sides of the retainer.

[0171] In some variants, each orthodontic bracket of the plurality of orthodontic brackets can include two stops disposed on the second side of the bracket. The two stops can be separated by a gap. Each connector of the plurality of connectors can include a tab that can be placed within the gap.

[0172] In some variants, the tab can include a groove that can contact a tool to facilitate insertion and/or removal of the plurality connectors from the slots of the plurality of orthodontic brackets.

[0173] In some variants, a rigidity of the interproximal structures can be greater at distal ends of the archform compared to a central portion.

[0174] In some variants, the plurality of interproximal structures can include interproximal loops.

[0175] In some variants, the archform can be formed from a sheet of material.

[0176] In some variants, opposing sides of the archform are parallel to each other.

[0177] In some variants, a method of coupling an archform to a bracket is disclosed herein. The method can include angling a connector of the archform relative to a face of the bracket. The method can include inserting a portion of the connector into a slot of the bracket and against a C spring disposed within a retainer. The retainer can be positioned on a first side of the bracket. The method can include applying a force to the connector such that the connector pushes against the C spring so that the C spring flexes. The method can include rotating the connector toward a face of the bracket. The method can include ceasing to apply a force to the connector such that the C spring pushes portions of the connector against stops of the bracket such that the connector is secured under at least a portion of the stops and the retainer.

[0178] In some variants, a method of moving a patient's teeth is disclosed herein. The method can include bonding one or more brackets to a patient's teeth. The method can include coupling a first archform to the one or more brackets. The first archform can have a first plurality of interproximal loops. A first interproximal loop of the plurality of first interproximal loops can have a first width. The method can include decoupling the first archform from the one or more brackets. The method can include coupling a second archform to the one or more brackets. The second archform having a second plurality of interproximal loops corresponding to the first plurality of interproximal loops. A second interproximal loop of the plurality of second interproximal loops, corresponding to the first interproximal loop, can have a second width. The second width can be greater than the first width.

[0179] In some variants, the method can include cutting the first and second archforms from a flat sheet of material.

[0180] In some variants, a method of forming a custom nonplanar archform is disclosed herein. The method can include cutting a template archform from a sheet of material. The template archform can be suitable for use in treatment plans for a percentage of a population. The method can include receiving scan data of teeth inside of a patient's mouth. The method can include creating a digital model of the teeth in first positions. The method can include digitally moving the teeth in the digital model from first positions to second positions. The method can include digitally positioning digital brackets on surfaces of the teeth in the digital model. The method can include creating a

physical fixture, based at least partially on the digital model, with retention features positioned based on the corresponding positioning of the digital brackets in the digital model. The method can include deflecting the template archform to couple to the retention features of the physical fixture to hold the template archform in a custom nonplanar shape. The method can include setting the template archform in the custom nonplanar shape.

[0181] In some variants, the physical fixture can be a physical model of the patient's teeth.

[0182] In some variants, the physical fixture is 3D printed.

[0183] In some variants, the scan data is received from a patient's portable electronic device. The scan data can be taken using the patient's portable electronic device.

[0184] In some variants, the scan data can be received from a clinic.

[0185] In some variants, the method can include tumbling the template archform to reduce sharp edges.

[0186] In some variants, the template archform can include one or more characteristics of any of the archforms described herein.

[0187] In some variants, the method can include cutting a plurality of template archforms from the sheet of material.

[0188] In some variants, cutting the template archform can include laser or waterjet cutting.

[0189] In some variants, the sheet of material can be a shape memory material.

[0190] In some variants, the sheet of material is nickel titanium.

[0191] In some variants, the method can include cold working and heat treating the sheet of material such that the template archform, after being set in the custom nonplanar shape, is in a martensite phase at room temperature and austenite phase at body temperature.

[0192] In some variants, the method can include heat treating the template archform to set a transition temperature such that the template archform is in a martensite phase at room temperature and austenite phase at body temperature.

[0193] In some variants, a method of forming a custom nonplanar archform is disclosed herein. The method can include receiving scan data of teeth inside of a patient's mouth. The method can include selecting a template archform from a plurality

of template archforms based on the received scan data. The plurality of template archforms can be suitable for use in treatment plans for a percentage of a population. The method can include creating a digital model of the teeth in first positions. The method can include digitally moving the teeth in the digital model from first positions to second positions. The method can include digitally positioning digital brackets on surfaces of the teeth in the digital model. The method can include creating a physical fixture, based at least partially on the digital model, with retention features positioned based on the corresponding positioning of the digital brackets in the digital model. The method can include deflecting the template archform to couple to the retention features of the physical fixture to hold the template archform in a custom nonplanar shape. The method can include setting the template archform in the custom nonplanar shape.

[0194] In some variants, a method of forming a custom nonplanar archform is disclosed herein. The method can include receiving scan data of teeth inside of a patient's mouth. The method can include cutting a custom archform from a sheet of material based on the scan data. The method can include creating a digital model of the teeth in first positions. The method can include digitally moving the teeth in the digital model from first positions to second positions. The method can include digitally positioning digital brackets on surfaces of the teeth in the digital model. The method can include creating a physical fixture, based at least partially on the digital model, with retention features positioned based on the corresponding positioning of the digital brackets in the digital model. The method can include deflecting the custom archform to couple to the retention features of the physical fixture to hold the custom archform in a custom nonplanar shape. The method can include setting the custom archform in the custom nonplanar shape.

[0195] In some variants, the physical fixture can be a physical model of the patient's teeth.

[0196] In some variants, the physical fixture can be 3D printed.

[0197] In some variants, the scan data can be received from a patient's portable electronic device. The scan data can be taken using the patient's portable electronic device.

[0198] In some variants, the scan data can be received from a clinic.

[0199] In some variants, the method can include tumbling the custom archform to reduce sharp edges.

[0200] In some variants, the custom archform can include one or more characteristics of any of the archforms described herein.

[0201] In some variants, the method can include cutting a plurality of custom archforms from the sheet of material.

[0202] In some variants, cutting the custom archform can include laser or waterjet cutting.

[0203] In some variants, the sheet of material can be a shape memory material.

[0204] In some variants, the sheet of material can be nickel titanium

[0205] In some variants, the method can include cold working and heat treating the sheet of material such that the custom archform, after being set in the custom nonplanar shape, is in a martensite phase at room temperature and austenite phase at body temperature.

[0206] In some variants, the method can include heat treating the custom archform to set a transition temperature such that the custom archform is in a martensite phase at room temperature and austenite phase at body temperature.

[0207] In some variants, an archform that can follow at least a portion of a dental arch of a patient is disclosed herein. The archform can include a longitudinal axis. The archform can include can include a plurality of bracket connectors. Each of the bracket connectors can include a buccal surface and a lingual surface, the buccal surface and the lingual surface parallel to each other. Each of the bracket connectors can include a portion extending in an occlusal direction or gingival direction away from the longitudinal axis. The archform can include a plurality of interproximal segments. Each of the interproximal segments can be disposed between a pair of bracket connectors of the plurality of bracket connectors. The plurality of bracket connectors can couple with corresponding brackets bonded to teeth of the patient such that the plurality of bracket connectors do not slide rotatably about the longitudinal axis relative to the brackets to facilitate torque control of the teeth of the patient.

[0208] In some variants, the archform can include a custom memorized shape corresponding to a 3D virtual setup of teeth of the patient. The archform can be deflected from the custom memorized shape to couple to the brackets, resulting in forces being exerted on the teeth of the patient to move the teeth from an initial configuration toward a configuration corresponding to the 3D virtual setup.

[0209] In some variants, the plurality of interproximal segments can include interproximal loops.

[0210] In some variants, the portion can include a tab.

[0211] In some variants, the portion can include one or more arms.

[0212] In some variants, the archform can include a transition temperature such that the template archform is in a martensite phase at room temperature and austenite phase at body temperature.

[0213] In some variants, an archform that can move teeth of a patient is disclosed herein. The archform can include a first phase when a temperature of the archform is at room temperature and a second phase when the temperature of the archform is at body temperature.

[0214] In some variants, the first phase can be martensite.

[0215] In some variants, the second phase can be austenite.

[0216] In some variants, the archform can be pliable in the first phase.

[0217] In some variants, the archform can be rigid in the second phase.

[0218] In some variants, the archform can be springy in the second phase.

[0219] In some variants, body temperature can be between 97 and 99 degrees Fahrenheit.

[0220] In some variants, room temperature can be between 65 and 75 degrees Fahrenheit.

[0221] In some variants, the archform can include bracket connectors that can be coupled, respectively, to orthodontic brackets disposed on the patient's teeth such that the bracket connectors do not slide with respect to the orthodontic brackets.

[0222] In some variants, the archform can include interproximal loops. Each interproximal loop can be disposed between adjacent bracket connectors.

[0223] In some variants, the archform can include nickel titanium.

[0224] In some variants, the archform can include a buccal surface and a lingual surface. The buccal and lingual surfaces can be parallel to each other.

[0225] In some variants, the archform can include a circular cross-section.

[0226] In some variants, the archform can be coupled to brackets disposed on lingual surfaces of the patient's teeth.

[0227] In some variants, the archform can include a custom nonplanar shape in the second phase.

[0228] In some variants, the custom nonplanar shape can correspond to an alignment of the patient's teeth.

[0229] In some variants, an archform that can move teeth of a patient is disclosed herein. The archform can include a transition temperature such that the archform is in a first phase below the transition temperature and a second phase above the transition temperature.

[0230] In some variants, the transition temperature can be between 75 and 97 degrees Fahrenheit.

[0231] In some variants, the transition temperature can be between 80 and 90 degrees Fahrenheit.

[0232] In some variants, the first phase can be martensite.

[0233] In some variants, the second phase can be austenite.

[0234] In some variants, the archform can be pliable in the first phase.

[0235] In some variants, the archform can be rigid in the second phase.

[0236] In some variants, the archform can be springy in the second phase.

[0237] In some variants, the archform can be in the first phase when the temperature of the archform is at room temperature.

[0238] In some variants, room temperature can be between 65 and 75 degrees Fahrenheit.

[0239] In some variants, the archform can be in the second phase when the temperature of the archform is at body temperature.

[0240] In some variants, body temperature can be between 65 and 75 degrees Fahrenheit.

[0241] In some variants, the archform can include a custom nonplanar shape in the second phase.

[0242] In some variants, the custom nonplanar shape can correspond to an alignment of the patient's teeth.

[0243] In some variants, an archform that can move teeth of a patient is disclosed herein. The archform can be in a martensite phase when a temperature of the archform is between 65 and 75 degrees Fahrenheit. The archform can be in an austenite phase when the temperature of the archform is between 97 and 99 degrees Fahrenheit.

[0244] In some variants, between 65 and 75 degrees Fahrenheit can correspond with room temperature.

[0245] In some variants, between 97 and 99 degrees Fahrenheit can correspond with body temperature.

[0246] In some variants, an archform that can move teeth of a patient is disclosed herein. The archform can include a transition temperature between 75 and 97 degrees Fahrenheit such that the archform can be in a martensite phase when a temperature of the archform is below the transition temperature and an austenite phase when the temperature of the archform is above the transition temperature.

[0247] In some variants, a method of forming an archform to move teeth of a patient is disclosed herein. The method can include heat treating the archform such that the archform is in a martensite phase when a temperature of the archform is between 65 and 75 degrees Fahrenheit and an austenite phase when the temperature of the archform is between 97 and 99 degrees Fahrenheit.

[0248] In some variants, the archform can be pliable in the martensite phase and rigid in the austenite phase.

[0249] In some variants, between 65 and 75 degrees Fahrenheit corresponds with room temperature.

[0250] In some variants, between 97 and 99 degrees Fahrenheit corresponds with body temperature.

[0251] In some variants, the archform can include nickel titanium.

[0252] In some variants, the method can include forming bracket connectors and interproximal loops. The interproximal loops can be disposed between adjacent bracket connectors.

[0253] In some variants, the forming bracket connectors and interproximal loops can include cutting the archform from a sheet of material.

[0254] In some variants, the method can include shaping the archform to have a nonplanar shape corresponding to an expected alignment of a patient's teeth based on a digital model of the patient's teeth.

[0255] In some variants, heat treating the archform can include heating the archform in an oven.

[0256] In some variants, a method of forming an archform to move teeth of a patient is disclosed herein. The method can include heat treating the archform to set a transition temperature of the archform such that the archform is in a martensite phase below the transition temperature and an austenite phase above the transition temperature.

[0257] In some variants, the transition temperature can be between 75 and 97 degrees Fahrenheit.

[0258] In some variants, the transition temperature can be between 80 and 90 degrees Fahrenheit.

BRIEF DESCRIPTION OF THE DRAWINGS

[0259] These drawings are illustrative embodiments and do not present all possible embodiments of this invention. The illustrated embodiments are intended to illustrate, but not to limit, the scope of protection. Various features of the different disclosed embodiments can be combined to form further embodiments, which are part of this disclosure.

[0260] FIG. 1A illustrates an archform retained within a bracket.

[0261] FIG. 1B illustrates another view of the archform and bracket of FIG. 1A.

[0262] FIG. 2A illustrates an archform retained within a bracket.

[0263] FIG. 2B illustrates another view of the archform and bracket of FIG. 2A.

[0264] FIG. 2C illustrates a sectioned view of the archform and bracket of FIG. 2A.

[0265] FIG. 2D illustrates a side view of the archform and bracket of FIG. 2A.

[0266] FIGS. 2E–2G illustrate views of the archform and bracket of FIG. 2A being coupled together with a tool.

[0267] FIGS. 2H and 2I illustrate views of the archform and bracket of FIG. 2A being decoupled with the tool.

[0268] FIG. 3A and 3B illustrate an archform retained within a bracket.

[0269] FIG. 4 illustrates an archform retained within a bracket.

[0270] FIG. 5 illustrates an archform retained within a bracket.

[0271] FIG. 6A illustrates an archform with a bracket.

[0272] FIG. 6B illustrates the archform coupled within the bracket of 6A.

[0273] FIG. 6C and 6D illustrate sectioned views of 6B.

[0274] FIG. 6E illustrates a tool flexing a spring within the bracket of 6A.

[0275] FIG. 7A illustrates a bracket.

[0276] FIG. 7B illustrates the bracket of 7A retaining an archform.

[0277] FIG. 7C illustrates another view of FIG. 7B.

[0278] FIG. 7D illustrates the archform being inserted into the bracket of FIG. 7B.

[0279] FIG. 7E illustrates side view of 7B.

[0280] FIG. 7F illustrates a view of 7B.

[0281] FIG. 7G illustrates a view of a bracket and a male fastener of an archform for a lower anterior bracket.

[0282] FIG. 8A illustrates an archform being positioned within a bracket.

[0283] FIG. 8B illustrates the archform retained within the bracket of 8A.

[0284] FIG. 8C illustrates the bracket of FIG. 8A.

[0285] FIGS. 8D illustrates the bracket of FIG. 8A.

[0286] FIGS. 9A and 9B illustrate various views of a multi-part bracket.

[0287] FIG. 10A illustrates a multi-part bracket that can be placed on a molar of a patient.

[0288] FIGS. 10B and 10C illustrate the multi-part bracket of FIG. 10A with a male fastener of an archform placed therein.

[0289] FIG. 11A illustrates a multi-part bracket.

[0290] FIG. 11B illustrates a portion of the multi-part bracket of FIG. 11A.

[0291] FIG. 11C illustrates a section view of the multi-part bracket of FIG. 11A.

[0292] FIG. 12 illustrates a plurality of multi-part brackets coupled to an archform.

[0293] FIG. 13A illustrates a bracket.

[0294] FIG. 13B illustrates a rear view of the bracket of FIG. 13A.

[0295] FIG. 13C illustrates the bracket of FIG. 13A coupled to an archform.

[0296] FIG. 13D illustrates an archform.

[0297] FIG. 13E illustrates an archform with customized features.

[0298] FIG. 14A illustrates a tool grasping a portion of an archform disposed within a bracket.

[0299] FIG. 14B illustrates an enlarged view of a portion of the tool of FIG. 14A grasping the bracket.

[0300] FIG. 14C illustrates a tool, such as a hemostat, that can be used for archform insertion into a mouth of a patient.

[0301] FIG. 15A illustrates an archform that can be adhered or otherwise fixed to teeth of a patient.

[0302] FIG. 15B illustrates caps that can be attached or otherwise incorporated into an archform that can be applied to teeth of a patient.

[0303] FIG. 15C illustrates a soluble tray that can be used to apply an archform to teeth of a patient.

[0304] FIG. 16A illustrates a bracket, which can at least be attached to a molar.

[0305] FIG. 16B illustrates a section view of the bracket illustrated in FIG. 16A.

[0306] FIG. 16C illustrates a rear view of the bracket illustrated in FIG. 16A.

[0307] FIG. 16D illustrates a male connector of an archform.

[0308] FIG. 16E illustrates the male connector illustrated in FIG. 16D coupled to the bracket illustrated in FIG. 16A.

[0309] FIG. 17A illustrates a bracket, which can at least be attached to a lower anterior tooth, coupled to a male connector of an archform.

[0310] FIG. 17B illustrates the male connector of the archform illustrated in FIG. 17A.

[0311] FIG. 18 illustrates a bracket, which can at least be attached to a upper central tooth, coupled to a male connector of an archform.

[0312] FIG. 19 illustrates a bracket, which can at least be attached to a bicuspid, coupled to a male connector of an archform.

[0313] FIG. 20A illustrates an upper initial archform.

[0314] FIG. 20B illustrates an upper intermediate archform.

[0315] FIG. 20C illustrates an upper final archform.

[0316] FIG. 21A illustrates a lower initial archform.

[0317] FIG. 21B illustrates an upper intermediate archform.

[0318] FIG. 21C illustrates an upper final archform.

[0319] FIG. 22 illustrates an orthodontic appliance for a patient with crowded teeth.

[0320] FIG. 23A illustrates a tool for installing or removing a male connector from a bracket.

[0321] FIG. 23B illustrates a male connector inserted into a slot of a bracket at an angle.

[0322] FIG. 23C illustrates the tool illustrated in FIG. 23A applying a force against the male connector to compress a spring and rotate the male connector toward the bracket.

[0323] FIG. 23D illustrates the male connector within the slot of the bracket.

[0324] FIG. 23E illustrates the tool in FIG. 23A reoriented.

[0325] FIG. 23F illustrates the tool illustrated in FIG. 23E applying a force against the male connector to compress the spring and rotate the male connector away from the bracket.

[0326] FIG. 23G illustrates the male connector rotated out of the slot of the bracket.

[0327] FIG. 24 illustrates an archform with indicia corresponding to a patient.

[0328] FIG. 25A illustrates a method of manufacturing template archforms and custom shaping.

[0329] FIG. 25B illustrates a method of manufacturing and shaping custom archforms.

[0330] FIG. 26 illustrates an archform.

[0331] FIGS. 27A and 27B illustrates an archform.

DETAILED DESCRIPTION

[0332] Malocclusion of the teeth may be treated using orthodontic brackets and archforms. The edgewise appliance is the traditional orthodontic bracket that includes a rectangular slot that a round, square, or rectangular straight-wire segment can be inserted into. The edgewise appliance traditionally holds the straight archwire in the slot with an elastomeric or steel tie. This process of tying the archwire into each bracket can be a time-consuming procedure, especially for lingual braces.

[0333] The edgewise appliance uses sliding mechanics between the orthodontic bracket and archwire for orthodontic tooth movement. A downside of the use of sliding mechanics in some cases is that friction occurs between the bracket and archwire. The amount of friction is often unpredictable and must be overcome for tooth movement to occur. Because of the variability in the amount of friction, errors in tooth movement may occur leading to more appointments required to finish orthodontic treatment.

[0334] Friction-free mechanics, which solve the issue of friction in tooth movement, have been developed using an orthodontic bracket with a snap-fitted, non-

sliding archwire. These snap-fitted connections, however, in some cases can be difficult to connect, unreliable, vary from tooth to tooth within a patient's mouth, and even permit sliding, which can impair the performance of the archwire. Disclosed herein are improved archform and bracket solutions.

[0335] FIGS. 1A and 1B illustrates an orthodontic bracket and archform system that uses friction-free mechanics. FIG. 1A illustrates an archform 100, which can also be referred to as an archwire, retained in a bracket 200. Specifically, a male fastener 106, which can also be referred to as a male connector, connector, fastener, or male structure, of the archform 100 can be retained within a slot 202 of the bracket 200. The archform could include a wire with a circular, oval, rectangular, square, or other cross-section, or combinations of the foregoing. Optionally, the archform can include a constant or variable dimension, such as a width and/or thickness for example. Optionally, the archform can be made from a sheet of material, such as a shape memory material, and laser-cut, waterjet cut, or otherwise derived from the sheet of material.

[0336] The archform 100 can have a plurality of interproximal structures, e.g., loops 102, 104. The interproximal structures could include incomplete loops that do not form a full circle. The interproximal structures could also include V shaped or other structures with a vertex that do not necessarily include an arcuate surface. The interproximal structures can also include complex 3D structures that traverse multiple planes. The interproximal loops 102, 104 can be varying sizes and configurations. The interproximal loops 102, 104 can be bends in the archform 100. For example, the interproximal loop 102 can be wider (e.g., in the occlusal-gingival direction) than the interproximal loop 104, which can result in the interproximal loop 102 exerting larger forces on a patient's teeth than the interproximal loop 104. Optionally, the interproximal loop 102 can be the same thickness (e.g., in the lingual-buccal direction) as the interproximal loop 104 while being different widths. Optionally, a single interproximal loop 102, 104 is disposed between adjacent male fasteners 106. Optionally, one or more interproximal loops 102, 104 are disposed between adjacent male fasteners 106. Optionally, one, two, or more interproximal loops 102, 104 and/or straight segments are disposed between male fasteners 106. Optionally, the interproximal loops 102, 104 can have the same or differing curvatures, extend in the gingival and/or occlusal direction, and/or extend to differing lengths in the gingival and/or occlusal directions. Optionally, interproximal structures are present in between each and every male fastener and/or tooth. Optionally, interproximal structures are present in between a majority of adjacent male

fasteners but not all adjacent male fasteners, such as about, at least about, or no more than about 50%, 60%, 70%, 80%, 90%, 95%, or more or less of the adjacent male fasteners, or ranges including any two of the foregoing values.

[0337] The archform 100 can include a male fastener 106. The junctions between the male fastener 106 and the interproximal structures, e.g., loops 102, 104 can be curved, which can help to reduce stress concentrators that could lead to cracking, breaking, etc. The male fastener 106 can, optionally, be the same thickness (e.g., in the lingual-buccal direction) as the interproximal loops 102, 104. This can advantageously enable the interproximal loops 102, 104 and male fastener 106 to be cut from material having a uniform thickness (e.g., flat ribbon) during the fabrication process. Optionally, the male fastener 106 can have a different thicknesses (e.g., in the lingual-buccal direction) as the interproximal loops 102, 104. Optionally, the male fastener 106 can be positioned between interproximal loops 102, 104.

[0338] The male fastener 106 can include arms 108, 110. The arms 108, 110 can flex to allow the male fastener 106 to be locked within the bracket 200. For example, the arms 108, 110 can flex under a compressive load to temporarily reduce the length of the male fastener 106. This can advantageously enable the male fastener 106 to be positioned and retained within the slot 202 of the bracket 200, which is described in more detail herein. The arms 108, 110 can be curved inward (e.g., curved toward a central plane of the male fastener 106) such that the arms 108, 110 deflect inward when the male fastener 106 is under a compressive load. The arms 108, 110 can be the same size and/or configuration such that the arms 108, 110 flex (e.g., deflect) to substantially the same amount when under the same load. An opening 120 (e.g., void, space, aperture) can be disposed through the male fastener 106. The opening 120 can be disposed between the arms 108, 110. The arms 108, 110 can flex into the opening 120 when under a compressive load. Optionally, the void is entirely circumscribed along its periphery by the arms 108, 110 and other features of the archform 100. Optionally, the surface area or volume of the void is about or at least about 30%, 40%, 50%, 60%, 70%, 80%, 90%, or more or less of the entire surface area or volume of each male fastener component, or ranges including any two of the foregoing values.

[0339] The male fastener 106 can have a groove 112. The groove 112 (e.g., tool receptacle, tool receiver, opening, tool interface) can be configured to engage a tool. The tool can engage with the groove 112 to apply a force to the male fastener 106 such that the arms 108, 110 flex such that the male fastener 106 can be inserted into or

removed from the slot 202 of the bracket 200, as described in more detail herein. The groove 112 can be disposed on an end of the male fastener 106. Optionally, the groove 112 can be disposed on the occlusal side of the male fastener 106. The groove 112 can be centered on a central plane of the male fastener 106.

[0340] The archform 100 can be made from nickel titanium, stainless steel, titanium-molybdenum alloy, shape memory alloy, super elastic metals, and/or other suitable alloys, or combinations thereof. The archform 100 can be cut, e.g., laser cut, waterjet cut, etc. from a flat ribbon, sheet of material, or the like.

[0341] The bracket 200 can have a stop 204. The stop 204 can be disposed on an end of the bracket 200. Specifically, optionally, the stop 204 can be positioned on the gingival side of the bracket 200. The stop 204 can define a portion of the slot 202. The stop 204 can have an overhang 206 that retains the male fastener 106 within the slot 202 of the bracket 200. The stop 204, and/or other features disclosed herein, can have curved surfaces that help to alleviate tongue irritation.

[0342] The bracket 200 can have a retainer 208. The retainer 208 can be disposed on an end of the bracket 200. Specifically, optionally, the retainer 208 can be positioned on the occlusal side of the bracket 200. The retainer 208 can be positioned on an opposing end of the bracket 200 that is opposite the stop 204. The retainer 208 can define a portion of the slot 202. The retainer 208 can have an overhang 210 that retains the male fastener 106 within the slot of the bracket 200. The retainer 208 can have curved surfaces that help to alleviate tongue irritation.

[0343] The retainer 208 can have a groove 212. The groove 212 can assist in placing the male fastener 106 within the slot 202 of the bracket 200 and removing the male fastener 106 therefrom. Specifically, the groove 212 can engage with a tool that is used to impart a force on the male fastener 106 to flex the arms 108, 110 when placing the male fastener 106 in the slot 202 of the bracket 200 or removing the male fastener 106 therefrom. Optionally, the groove 212 can properly position and retain (e.g., help to prevent sliding) the tool for applying a force to the male fastener 106. Optionally, the groove 212 can act as the fulcrum for the tool as the tool applies a force to the male fastener 106 during insertion or removal. A face 214 of the bracket 200, the retainer 208, and/or the stop 204 can cooperate to define the slot 202 of the bracket 200 that is configured to receive the male fastener 106. The groove 212 can curve in an opposite direction relative to the groove 112. The groove 212 can allow a tool to reach the groove

112 when the male fastener 106 is retained within the slot 202 of the bracket. The groove 212 can be centered on a central plane of the bracket 200.

[0344] During insertion, an end of the male fastener 106 opposite the groove 112 can be placed against the stop 204 and/or under the overhang 206 such that the male fastener 106 is angled relative to the face 214 of the bracket 200. A tool, such as the tools disclosed elsewhere herein, can engage the groove 212 and groove 112 and be rotated in the direction of the stop 204, pushing (e.g., compressing) the male fastener 106 against the stop 204 while rotating the male fastener 106 toward the face 214 of the bracket 200 such that the groove 112 slides along the tool and toward the bracket 200. The force applied to the male fastener 106 can cause the arms 108, 110 to flex such that the male fastener 106 is maneuvered around the retainer 208. The tool can be removed such that the arms 108, 110 deflect (e.g., spring) back into an uncompressed configuration, locking the male fastener 106 under the overhangs 210, 206. The protrusion 216, described below, can push the male fastener 106 against the overhangs 206, 210. Optionally, the protrusion 216 can cause the male fastener 106 to flex against the overhangs 206, 110.

[0345] The bracket 200 can have a protrusion (e.g., bump) 216. The protrusion 216 can be positioned on and extend from the face 214 of the bracket 200. The protrusion 216 can be rounded. The protrusion 216 can push the male fastener 106 against the overhangs 206, 210 to prevent sliding between the archform 100 (e.g., male fastener 106) and the bracket 200. Optionally, the protrusion 216 can cause the male fastener 106 to flex against the overhands 206, 210 when the male fastener 106 is positioned within the slot 202 of the bracket 200. Optionally, the protrusion 216 can extend across the entire or a portion of the face 214 of the bracket 200 in the mesio-distal direction. Optionally, the protrusion 216 can be positioned between the stop 204 and the retainer 208.

[0346] During removal, the tool can be inserted through the groove 212 and into the groove 112. The tool can be rotated away from the stop 204, with the groove 212 acting as the fulcrum, such that the tool applies a force to the groove 112 that flexes the arms 108, 110 and rotates the end of the male fastener 106 with the groove 112 away from the face 214 of the bracket 200 such that the groove 112 slides along the tool away from the bracket 200. The flexing of the arms 108, 110 can allow the male fastener 106 to be moved out from under the retainer 208 such that the end of the male fastener 106 with the groove 112 is free from the slot 202 of the bracket 200. The male fastener 106 can then be entirely removed from the slot 202 of the bracket 200.

[0347] FIGS. 2A–2I illustrate an orthodontic bracket and archform system that uses friction-free mechanics. FIG. 2A illustrates an archform 100 retained in a bracket 200. Specifically, a male fastener 106 of the archform 100 is retained under a locking pin 226 and within a slot 202 of the bracket 200.

[0348] The archform 100 can have a plurality of interproximal structures, e.g., loops 102, 104. The archform 100 can have a male fastener 106. The male fastener 106 can include arms 108, 110. The arms 108, 110 can flex to allow the male fastener 106 to be locked (e.g., retained) within the bracket 200. The male fastener 106 can have an opening 120. The opening 120 can be disposed between the arms 108, 110.

[0349] The male fastener 106 can have a block 114 (e.g., stopper). The block 114 can be disposed between the arms 108, 110. The block 114 can extend into the opening 120. The block 114 can extend from one side of the periphery of the opening 120 to proximate another side 124 (e.g., surface) of the periphery of the opening 120. Optionally, the block 114 can extend from the occlusal side of the periphery of the opening 120 to proximate, but offset from, the gingival-side surface 124 of the periphery of the opening 120. As illustrated in FIG. 2A, a gap 122 can space apart the block 114 from the surface 124 that forms a portion of the periphery of the opening 120 (e.g., the gingival side of the periphery of the opening 120). As the arms 108, 110 flex under a compressive force, the block 114 can move closer to the surface 124, shrinking the gap 122. The block 114 can prevent the male fastener 106 from being compressed excessively. For example, the block 114 can move toward and ultimately contact the surface 124 to prevent further flexing of the arms 108, 110. Optionally, the arms 108, 110 can flex inward and ultimately contact the block 114 to prevent further flexing of the arms 108, 110.

[0350] The male fastener 106 can have engagement surfaces 116, 118. The engagement surfaces 116, 118 can engage with retaining surfaces 222, 224 of the bracket 200, described in more detail elsewhere herein. The engagement surfaces 116, 118 can help to prevent sliding (e.g., reduce or eliminate slop, etc.) between the archform 100 and the bracket 200. The engagement surfaces 116, 118 can help to prevent lateral movement of the male fastener 106 in the mesio-distal direction. The engagement surfaces 116, 118 can be angled relative to a central plane of the male fastener 106. The engagement surfaces 116, 118 can be the same, which can include the same size, angle, etc.

[0351] The male fastener 106 can have a groove 112. The groove 112 (e.g., tool receptacle, tool receiver, opening, tool interface) can be configured to receive a tool.

The groove 112 can be disposed in a tab 126 (e.g., flange) that can be positioned under the locking pin 226 to retain the male fastener 106 within the bracket 200. The engagement surfaces 116, 118 can form a portion of the tab 126. The tool can engage with the groove 112 to apply a force to the male fastener 106 such that the arms 108, 110 flex such that the male fastener 106 can be inserted into or removed from the slot 202 of the bracket 200, as described in more detail herein. The groove 112 can be disposed on an end of the male fastener 106. The groove 112 can be disposed on the tab 126. Optionally, the groove 112 can be disposed on the occlusal side of the male fastener 106. The groove 112 can be centered on a central plane of the male fastener 106.

[0352] The bracket 200 can have a stop 204. The stop 204 can have an overhang 206. The overhang 206, as clearly shown in FIG. 2C, can define an upper surface of the slot 202 of the bracket 200 that receives the male fastener 106. The overhang 206 can have a chamfer 238 (e.g., angled surface). The chamfer 238 can enable (e.g., facilitate) the male fastener 106 to rotate out of or into the slot 202 of the bracket 200 without being prohibited by the overhang 206. Similarly, the stop 204 can have a recess 240 (e.g., undercut), as detailed elsewhere herein. The recess 240 can enable (e.g., facilitate) the male fastener 106 to rotate out of or into the slot 202 of the bracket 200 without being prohibited by the stop 206, as detailed elsewhere herein.

[0353] Returning to FIGS. 2A and 2B, the bracket 200 can have a retainer 208. The retainer 208 can be disposed on an end of the bracket 200. Specifically, optionally, the retainer 208 can be positioned on the occlusal side of the bracket 200. The retainer 208 can be positioned on an end of the bracket 200 that is opposite the stop 204. The retainer 208 can define a portion of the slot 202. The retainer 208 can have curved surfaces to alleviate tongue irritation.

[0354] The retainer 208 can have walls 218, 220. The walls 218, 220 can be positioned on the mesial and distal sides of the bracket 200. The walls 218, 220 can be spaced apart from each other with a wall 232 extending therebetween. The wall 232 can be perpendicularly oriented relative to the walls 218, 220. The wall 232 can help to prevent adhesive from entering the slot 202 of the bracket 200. The wall 232 can be disposed on an end of the bracket 200. The wall 232, optionally, can be disposed on the occlusal end of the bracket 200. The walls 218, 220 can be parallel to each other.

[0355] The walls 218, 220 can, respectively, have retaining surfaces 222, 224, as clearly shown in FIG. 2A. As provided elsewhere herein, the retaining surfaces 222, 224 can engage with the engagement surfaces 116, 118. The retaining surfaces 222, 224

can be disposed on interior sides of the walls 218, 220. The retaining surfaces 222, 224 can be disposed on and/or proximate ends of the walls 218, 220.

[0356] The wall 218 can have an aperture 228. The aperture 228 can be sized and configured to receive an end of a locking pin 226 (e.g., rod, bar). Optionally, the aperture 228 can be sized and configured to fixedly receive the locking pin 226. Optionally, the locking pin 226 is staked (e.g., press-fit, friction fit, etc.) into the aperture 228 such that the locking pin 226 is substantially fixed therein.

[0357] The wall 220 can have an aperture 230. The aperture 230 can be sized and configured to moveably receive the locking pin 226. As clearly illustrated in FIG. 2B, the aperture 230 can have a locking portion 234 (e.g., detent, recess) and enlarged portion 236. Optionally, the enlarged portion 236 can be closer to the occlusal end of the bracket 200 than the locking portion 234. The enlarged portion 236 can allow the locking pin 226 to deflect while still being retained within the aperture 230 during insertion and removal of the male fastener 106 from the slot 202 of the bracket 200. The locking portion 234 can receive the locking pin 226 when the locking pin 226 is not being deflected during insertion and removal of the male fastener 106. The locking portion 234 can retain the locking pin 226 when the male fastener 106 is disposed in the slot 202 of the bracket 200. The locking portion 234 can prevent the inadvertent deflection of the locking pin 226 during teeth brushing, etc., which could cause the inadvertent removal of the male fastener 106 from the slot 202 of the bracket 200.

[0358] The locking pin 226 can retain the male fastener 106 within the slot 202 of the bracket 200. The locking pin 226 can extend between the walls 218, 220. An end of the locking pin 226 can be fixedly disposed within the aperture 228, while an opposing end of the locking pin 226 can be moveably disposed within the aperture 230. The locking pin 226 can deflect (e.g., flex) when a tool applies a force thereto. The end of the locking pin 226 can be fixed within the aperture 228 while the end of the locking pin 226 within the aperture 230 can move due to deflection of the locking pin 226. Specifically, the locking pin 226 can deflect from the locking portion 234 to the enlarged portion 236, allowing the male fastener 106 to be inserted into or removed from the slot 202 of the bracket 200. Optionally, the end of the locking pin 226 within the aperture 230 is deflected up by the male fastener 106 and into the locking portion 234 of the aperture 230 when the male fastener 106 is retained within the slot 202 of the bracket 200.

[0359] The bracket 200 can have a protrusion 216 (e.g., bump). The protrusion 216 can be rounded. The protrusion 216 can extend from mesial to distal sides

of the bracket 200. The protrusion 216 can extend from the face 214. The protrusion 216, as clearly shown in FIG. 2C, can be positioned between the retainer 208 and the stop 204. A portion of the protrusion 216 can be disposed under the overhang 206. The protrusion 216 can push the male fastener 106 into the overhang 206 and the locking pin 226 such that the male fastener 106 is securely retained within the slot 202 of the bracket 200, which can reduce and/or eliminate sliding between the archform 100 (e.g., male fastener 106) and the bracket 200.

[0360] During insertion, an end of the male fastener 106 opposite the groove 112 and/or tab 126 can be placed against the stop 204 and/or under the overhang 206 such that the male fastener 106 is angled relative to the face 214 of the bracket 200, as illustrated in FIGS. 2E and 2F. A tool 300 (e.g., explorer tool, explorer) can be inserted between the locking pin 226 and the groove 112. Specifically, a tip 306 (e.g., pointed tip, conical tip) on a distal end of a shaft portion 302 can be inserted between the locking pin 226 and the groove 112. The tool 300 can be rotated in a first direction 304 (e.g., toward the retainer 204, toward the male fastener 106), deflecting the locking pin 226 into the enlarged portion 236 of the aperture 230 and rotating the portion of the male fastener 106 with the groove 112 under the locking pin 226 and into the slot 202, as shown in FIG. 2G. The tool 300 can be removed from between the locking pin 226 and the groove 112, allowing the locking pin 226 to flex into the locking portion 234 of the aperture 230, as shown in FIG. 2B. The male fastener 106 can be pushed by the protrusion 216 into the overhang 206 and the locking pin 226, helping to reduce and/or eliminate sliding (e.g., slop) between the archform 100 and the bracket 200. The engagement surfaces 116, 118 of the male fastener 106 can engage the retaining surfaces 222, 224 of the retainer 208 of the bracket 200, helping to reduce and/or eliminate sliding (e.g., slop) between the archform 100 and the bracket 200. The tool 300 can apply equal and opposite forces against one or more component(s) of the bracket 200 and/or male fastener 106(or the bracket itself) during installation and removal. Equal and opposite forces can be important to reduce discomfort to the patient when inserting or removing the male fastener 106 from the bracket 200. For example, the tool 300 can apply equal forces to the locking pin 126 and groove 112 during installation or removal.

[0361] During removal, the tool 300 can be inserted between the locking pin 226 and the groove 112, as shown in FIGS. 2H and 2I. Specifically, a downward force 310 can be applied to the tool 300 with the tip 306 of the shaft portion 302 between the locking pin 226 and the groove 112. The tool 300 can be rotated in a second direction

308, deflecting the locking pin 126 into the enlarged portion 236 of the aperture 230 and rotating the portion of the male fastener 106 with the groove 112 and/or tab 126 away from the face 214 of the bracket 200 and out from under the locking pin 126. The male fastener 106 can then be removed from under the overhang 206 of the stop 204.

[0362] FIGS. 3A and 3B illustrate an orthodontic bracket and archform system that uses friction-free mechanics. As shown in FIG. 3A and 3B, the bracket 200 can have grip surfaces 242, 244 (e.g., purchase points). The grip surfaces 242, 244 can be gripped by a tool, such as pliers, debonding pliers, and/or lingual debonding pliers, for handling. The grip surfaces 242, 244 can be gripped by a tool to remove the bracket 200 from being bonded to a patient's teeth. The grip surfaces 242, 244 can be gripped by a tool to position the bracket 200 onto the lingual or labial side of a patient's teeth for bonding. The grip surfaces 242, 244 can be positioned on opposing ends of the bracket 200. Optionally, the grip surface 242 can be positioned on the occlusal side of the bracket 200 and the grip surface 244 can be positioned on the gingival side of the bracket 200. The grip surfaces 242, 244 can be angled relative to each other. The grip surfaces 242, 244 can be proximate the retainer 208 and stop 204, respectively. The grip surfaces 242, 244 can be angled relative to a central plane of the bracket 200. The grip surfaces 242, 244 can be angled relative to a back surface 246 of the bracket 200, as shown in FIG. 3B. The back surface 246 of the bracket can be bonded to a patient's tooth, such as the lingual or labial side of the patient's tooth. A distance 248 can extend between the back surface 246 and the face 214 of the bracket 200.

[0363] FIG. 4 illustrates an orthodontic bracket and archform system that uses friction-free mechanics. As shown in FIG. 4, the bracket 200 has walls 250. The walls 250 can be positioned on the mesial and distal sides of the bracket 200. The walls 250 can help prevent adhesion intrusion onto the face 214 and/or into the slot 202 of the bracket 200. The walls 250 can help prevent sliding between the archform 100 (e.g., male fastener 106) and the bracket 200. The walls 250 can be part of the retainer 208 and/or walls 218, 220. Optionally, a cover (e.g., roof, top) can extend over the locking pin 226 to prevent unintentional contact (e.g., misuse) with the tool and/or prevent the intrusion of adhesive.

[0364] The portion of the bracket 200 with the stop 204 can be raised, as shown in FIG. 4, which can help prevent adhesive intrusion into the slot 202. Optionally, the gingival end of the bracket 200 can be raised. The face 214 can be angled relative to the back surface 246 such that a distance 248 between the face 214 and the back surface

246 is greater closer to the stop 200 (e.g., closer to the gingival side) than the retainer 208 (e.g., occlusal side).

[0365] FIGS. 5 illustrates an orthodontic bracket and archform system that uses friction-free mechanics. As shown in FIG. 5, the bracket 200 has walls 250, as described above, that can prevent adhesive instruction. The walls 250 can also help to prevent the male fastener 106 and/or archform 100 from sliding in the bracket 200. The bracket 200, illustrated in FIG. 5, can be narrower in the mesio-distal direction than some other brackets shown herein, which can accommodate teeth of different dimensions.

[0366] 6A–6E illustrate an orthodontic bracket and archform system that uses friction-free mechanics. As shown in FIG. 6A, the bracket 200 has a retainer 208. Optionally, the retainer 208 can be positioned on the occlusal side of the bracket 200. The retainer 208 releasably retains the male fastener 106 of the archform 100 within a slot 202 of the bracket 200. The retainer 208 has walls 218, 220. The walls 218, 220 can be respectively positioned on the mesial and distal sides of the bracket 200. The walls 218, 220 can secure the male fastener 106 therebetween to prohibit or reduce lateral movement of the male fastener 106 and/or sliding of the archform 100 with respect to the bracket 200. The walls, 218, 220 can prevent the intrusion of adhesive.

[0367] The retainer 200 can have a C spring 256 (e.g., spring, leaf spring, spring locking pin). The C spring 256 can retain the male fastener 106. Specifically, the C spring 256 can retain the tab 126 of the male fastener 106 to releasably prevent the male fastener 106 from being removed from the slot 202 of the bracket 200. The C spring 256 can deflect (e.g., flex) under a load and, upon removal of the load, spring back to an undeflected configuration. The C spring 256 can compress onto itself, deflect/flex inward, etc., and return to an uncompressed, deflected, and/or flexed state. The C spring 256 can be oriented in a mesio-distal direction. A central axis of the C spring 256 can be oriented in the mesio-distal direction. The C spring 256 can be oriented perpendicularly relative to the longitudinal axis of the male fastener 106 when the male fastener 106 is retained within the slot 202 of the bracket 200 and/or a longitudinal axis of the bracket 200. One end of the C spring 256 can be retained, which can include fixedly retained, within a slot 258 of the retainer 200. Another end of the C spring 256 (e.g., a free end) can extend out of the slot 258 and into an opening 252 of the retainer 208. A recess 254 can extend a portion of the opening 252 to provide space for the C spring 256 to deflect when a force is applied thereto. The free end of the C spring 256 can deflect under a force, which can cause the C spring 256 to flex into the recess 254 and/or flex in a

direction that is away from the applied force. This can enable the male fastener 106 to be rotated under the C spring 256. Upon removal of the force, the C spring 256 can spring, which can include returning to an undeflected state, to retain the male fastener 106 (e.g., tab 126) in place. Optionally, the free end of the C spring 256 can engage the male fastener 106 (e.g., tab 126) and apply a force thereto. This C spring arrangement can be beneficial for narrow brackets because the effectiveness of the spring may not depend on the length thereof.

[0368] The retainer 200 can have a groove 212. The groove 212 can provide access to at least a portion of the C spring 256. The groove 212 can enable a tool to reach the C spring 256 and apply a force thereto. The groove 212 can enable the tab 126 of the male fastener 106 to be rotated to contact the C spring 256. The groove 212 can be oriented in an opposite direction relative to the groove 112 of the male fastener 106.

[0369] The bracket 200 can have a stop 204. The stop 204 can prevent movement of the male fastener in a direction, which can include the gingival direction. The stop 204 can be positioned on a side of the bracket 200 that is opposite the retainer 208. Optionally, the stop 204 can be positioned on the gingival side of the bracket 200. The stop 204 can have an overhang 206. The overhang 206 can extend over a portion of the slot 202 that can receive the male fastener 206. The overhang 206 can retain the male fastener 106 within the slot 202 of the bracket.

[0370] The stop 204 can have a recess 240, as shown in FIG. 6A. The recess 240 can enable the male fastener 106 to be rotated while a portion of the male fastener 106 is positioned under the overhang 206. The stop 204 can have an angled surface 238 that enables a portion of the male fastener 106 to be conveniently positioned under the overhang 206, as shown in FIG. 6B. The stop 204, optionally, can have a hole 264 extending therethrough. Optionally, the stop 204 does not include the hole 264.

[0371] The bracket 200 can include a face 214 that forms a portion (e.g., a side) of the slot 202 of the bracket. The bracket can include a protrusion 216 (e.g., bump) extending from the face 214. The protrusion 216 can, when the male fastener 106 is retained under the C spring 256, push the male fastener 106 against an edge of the C spring 256 and the overhang 206. The bracket 200 can include a raised face 215. The raised face 215 can be positioned farther away from a back surface 246 of the bracket 200 than the face 214. The protrusion 216 can be positioned between the raised face 215 and the face 214. A channel 260 can separate mesial and distal portions of the protrusion 216, face 214, and raised face 215. The channel 260 can extend along a longitudinal axis of

the bracket 200. The channel 260 can be positioned between mesial and distal sides of the bracket 200.

[0372] The archform 100 can have a male fastener 106. The male fastener 106 can have arms 108, 110. The arms 108, 110 can be on opposing sides of the male fastener 106. The arms 108, 110 can be on the mesial and distal sides of the male fastener 106. The arms 108, 110, as described elsewhere herein can flex (e.g., deflect) under a force (e.g., load). The arms 108, 110, as described elsewhere herein can return to an undeflected configuration absent the application of a force. The arms 108, 110 can be separated by a space 120. The arms 108, 110 can curve inward toward the space 120. The arms 108, 110 can flex into the space 120.

[0373] The archform 100 can have a tab 126. The tab 126 can be retained under the C spring 256. The tab 126 can have a groove 112 that can engage a tool. The tool can apply a force to the groove 112 that deflects the arms 108, 110, thereby decreasing the length of the male fastener 106 such that the male fastener 106 can be rotated under the C spring or rotated out from under the C spring. The groove 112 can decrease the likelihood that the tool will slip when applying a load to the male fastener 106.

[0374] During installation, the portion of the male fastener 106 opposite the tab 126 can be positioned into the slot 202 and under the overhang 206, such that the male fastener 106 is angled relative to the face 214 and/or raised face 215. The tab 126 can contact the C spring 256. The tab 126 can be at least partially within the groove 212. The tool can be positioned between and/or within the groove 212 and the groove 112. The tool can be pushed toward the C spring 256 and/or rotated toward the stop 204, causing the C spring 256 to deflect, the arms 108, 110 to deflect, and/or the male fastener 106 to be rotated under the C spring 256. During the deflection of the C spring 256, the C spring 256 can flex into the recess 254 and back into the opening 252. The tool can be removed. The C spring 256 can return to an undeflected state and/or deflect to apply a retaining force to the male fastener 106 at interface 262, shown in Figure 6C. Specifically, the free end (e.g., edge of the C spring 256) can contact the male fastener 106 at interface 262, which can include applying a retaining force to the male fastener 106. The male fastener 106 can be retained under the overhang 206 and C spring 256. The protrusion 216 can push the male fastener 106 against the C spring 256 and the overhang 206, which can prevent sliding between the archform 100 (e.g., male fastener 106) and the bracket 200.

[0375] During removal, the tool can be positioned between the groove 212 and the C spring 256. The tool can be rotated away from the stop 204, causing the C spring 256 to deflect, the arms 108, 110 to deflect, and/or the male fastener 106 (e.g., the tab 126) to be rotated out from under the C spring 256 (e.g., out from under the free end of the C spring 256). The C spring 256 can return to an undeflected state. The male fastener 106 can be removed from the slot 202 and from under the overhang 206. During insertion and removal of the male fastener 106, forces can be concentrated on the C spring 256 and the tool 300, while the remainder of the bracket 200 can experience relatively small forces.

[0376] FIGS. 7A–7E illustrate an orthodontic bracket and archform system that uses friction-free mechanics. As shown in FIG. 7A, the orthodontic bracket 200 can include a slot 202 that can receive a male fastener 106 of an archform 100. At least a portion of the slot 202 can be defined by a face 214 of the bracket 200. At least a portion of the slot 202 can be defined by a retainer 208. The retainer 208 can have an overhang 210, similar to the overhangs described elsewhere herein. The overhang 210 can extend over the slot 202 and help to retain the male fastener 106 therein. The retainer 208 can be on the gingival side of the bracket 200.

[0377] The retainer 208 can have an opening 352 that holds a C spring 256 (e.g., spring, leaf spring). The opening 352 can be an oval shape to allow the C spring 256 to flex (e.g., deflect). The periphery of the opening 352 can prevent the C spring 256 from flexing beyond a desired range. The opening 352 can be oriented perpendicularly to the face 214 of the bracket. The retainer 208 can have a guide 366 (e.g., guide rail, protrusion, longitudinal protrusion, bar) that can orient the C spring 256 within the opening 352. The guide 366 can prevent the C spring 256 from twisting and/or otherwise being inadvertently removed from the bracket 200 and/or opening 352. The guide 366 can extend through and/or within the opening 352. The guide 366 can be oriented perpendicularly relative to the face 214 of the bracket 200. The C spring 256 can be positioned through the opening 352 and over the guide 366. Opposing ends of the C spring 256 can be positioned on opposing sides of the guide 366. The C spring 256, as shown in FIGS. 7D and 7E, can be exposed to at least a portion of the slot 202. The male fastener 106, when inserted into the slot 202, can contact and flex the C spring 256. The C spring 256 can apply a force to the male fastener 106, which can retain the male fastener 106 within the slot 202 of the bracket 200. The C spring 256 can be positioned

away from a handle 380 of the male fastener 106 during installation, reducing the risk that the C spring 256 will be damaged by tools, such as pliers, explorer tools, etc.

[0378] The bracket 200 can include stops 204, 205. The stops 204, 205 can be separated by a gap 368 therebetween. The stops 204, 205 can have cutouts 374, 375 (e.g., recesses, voids, spaces) that receive wedges 382, 383 (e.g., fingers) of the male fastener 106, as shown in FIGS. 7B, 7D, and 7E. The cutouts 374, 375 and wedges 382, 383 can cooperate to prevent sliding (e.g., reduce lateral movement) between the archform 100 (e.g., male fastener 106) and the bracket 200. The stops 204, 205 can have angled surfaces 384, as shown in FIG. 7D, that enable the male fastener 106 to be inserted into the slot 202 of the bracket 200 at an angle.

[0379] The gap 368 can receive a handle 380 (e.g., tab, tongue) of the male fastener 106. The handle 380, positioned between the stops 204, 205, can prevent sliding between the archform 100 (e.g., male fastener 106) and the bracket. A raised surface 372 can extend the gap 362 and between the stops 204, 205. The raised surface 372 can support the handle 380 off the face 214 of the bracket 200.

[0380] An aperture 370 can be positioned between the stops 204, 205. The aperture 370 can be sized and shaped to receive at least a portion of a tool during installation and removal of the male fastener 106 within the bracket. The aperture 370 can extend through at least a portion of the raised surface 372 and/or the face 214.

[0381] The bracket 200 can have a protrusion 216 that is similar to the other protrusions 216 described herein. The protrusion 216 can extend from the face 214 of the bracket 200. The protrusion can extend from proximate or at the mesial and distal sides of the bracket 200. The protrusion 216 can push the male fastener 206 against the overhang 210 and the cutouts 374, 375 when positioned within the bracket 200.

[0382] The bracket 200 can have inclined surfaces 376 that facilitate inserting the male fastener 106 within the bracket 200. The inclined surface 376 can be positioned on opposing sides of the retainer 208. As shown in FIG. 7D, the inclined surfaces 376 can facilitate the male fastener 106 being positioned within the slot 202 of the bracket 200 at an angle before being securely retained within or removed from the bracket 200. Similarly, the retainer 208 and/or overhang 210 can have an angled surface 238 that can facilitate the male fastener 106 being positioned within the slot of the bracket 200 at an angle before being securely retained within or removed from the bracket 200.

[0383] The archform 100 can have a male fastener 100, as shown in FIG. 7B. The male fastener 100 can be inserted into and retained by the bracket 200 (e.g., slot 202).

The male fastener 106 can have a handle 380 (e.g., tab). The handle 380 can allow the archform 100 to be gripped, such as with pliers, to insert the male fastener 106 into the bracket 200. The handle 380 can provide a purchase point for pliers. The handle 380, optionally, is configured such that it does not add additional strength to the archform 100 such that, if damaged, the archform 100 will perform as intended. Accordingly, optionally, nicking or damaging the handle 380 does not affect the performance or fatigue life of the archform 100. This is especially advantageous with an archform 100 made of nickel titanium which can be notch sensitive. The handle 380 can include a hole 378. The hole 378 can receive at least a portion of a tool (e.g., explorer, explorer tool) to position the male fastener 106.

[0384] The male fastener 106 can include wedges 382, 383 (e.g., fingers). The wedges 382, 383 can be formed by laser cutting and/or waterjet cutting the male fastener 106 to create the edge 286, defining at least a portion of the wedges 382, 383. As shown in FIG. 7D, the male fastener 106 can be inserted at an angle 390 relative to the face 214 and/or back surface 246, which can be referred to as the insertion/removal angle of attack. The wedges 382, 383, with the edge 286, can reduce the insertion/removal angle of attack, which can improve the ease of male fastener 106 insertion within the bracket 200. The wedges 382, 383 can be positioned within the cutouts 282, 283 of the stops 204, 205.

[0385] During insertion, the male fastener 106 can be inserted at an angle 390 into the slot 202 of the bracket 200. The inclined surfaces 376, angled surfaces 384, edges 286 of the wedges 382, 383, and/or angled surface 238 can ease insertion (e.g., reduce the insertion angle 390) of the male fastener 106 into the slot 202 of the bracket 200. A force can be applied to the male fastener 106, which can be with a tool interfacing with the handle 380, such that the C spring 256 is compressed. The male fastener 106 can be rotated toward the face 214 such that the male fastener 106 is parallel with the face 214. The force applied to the male fastener 106 can be removed, allowing the C spring 256 to push the wedges 382, 383 into the cutouts 374, 375, as shown in FIG. 7E. The protrusion 216 can push the male fastener 106 into the overhang 210 and/or push the wedges 382, 383 against respective surfaces of the cutouts 374, 375. As shown in FIG. 7B, portions of the archform 100 proximate the male fastener 106 can interface with sides of the bracket 200 (e.g., mesial and distal sides) to reduce and/or prevent lateral movement between the archform 100(e.g., male fastener 106) and the bracket 200.

[0386] During removal, a tool can be inserted into the hole 378 of the handle 380. Optionally, the tool can be inserted through the hole 378 of the handle 380 and at least partially into the hole 370. The tool can be tilted (e.g., rotated) in the direction of the retainer 208, which can compress the C spring 256, remove the wedges 382, 383 from the cutouts 374, 375, and rotate the side of the male fastener 106 with the handle 380 out of the slot 202 of the bracket 200. The male fastener 106 can then be removed from the bracket 200 at an angle.

[0387] As shown in FIGS. 7F and 7G, similar retaining mechanisms can be used for molar brackets, as shown in FIG. 7F, and lower anterior brackets, as shown in FIG. 7G. Optionally, the lower anterior bracket shown in FIG. 7G can have some differences compared to the molar bracket shown in FIG. 7F due to tooth sizes. As shown in FIG. 7G, the bracket 200 can include a stop 204. The stop 204 can include cutouts and/or an overhang as described elsewhere herein. The cutouts and/or overhang can receive wedges 382, 383 of the male fastener 106.

[0388] The bracket 200 can include a retainer 208. The retainer 208 can have an overhang 210. The retainer 208 can have an opening 352 that houses a C spring 256. One end of the C spring 256 can be coupled, which can include fixed, to a flange 367 to help prevent unintentional removal of the C spring 256. The other end of the C spring 256 can be free, allowing the C spring 256 to flex under the application of a force and return to an unflexed configuration absent the application of the force. At least a portion of the C spring 256 can be accessible via the slot 202 of the bracket 200 such that a male fastener 106 inserted into the slot 202 can compress the C spring 256.

[0389] The archform 100 can have a male fastener 106. The male fastener 106 can have a handle 288. The handle 288 can be gripped by tools, such as pliers, to manipulate the archform 100 without negatively impacting the performance of the archform 100.

[0390] The male fastener 106 can include wedges 382, 383 that can be separated by a groove 112. The groove 112 can receive a tool that can apply a force thereto such that the male fastener 106 compresses the C spring 256 and enables the wedges 382, 383 to maneuver around the stop 204 during insertion and/or removal of the male fastener 106. The male fastener 106 can be inserted and removed from the bracket 200 using similar techniques to those described elsewhere herein.

[0391] FIGS. 8A–8D illustrate an orthodontic bracket and archform system that uses friction-free mechanics. As shown in FIG. 8A, the archform 100 can have a

male fastener 106. The male fastener 106 can include a guiding channel 802 (e.g., recess, channel). The guiding channel 802 can guide a tab 804 of a bracket 200. The guiding channel 802 can guide a tab 804 to flex around the surface(s) of the guiding channel 804 to engage with a holding surface 806 (e.g., surface). The tab 804 can be made of a variety of material such as sheet metal. The tab 804 can hold the male fastener 106 within the slot of the bracket 200. The bracket 200 can include a tool receiving channel 808 that can receive a tool to deflect the tab 804 from the holding surface 806 to decouple the male fastener 106 from the bracket.

[0392] The bracket 200 can have walls 218, 220. The walls 218, 220 can align the male fastener 106 within the bracket 200. The walls 218, 220 can prevent sliding (e.g., slop) between the archform 100 and the bracket 200. The walls 218, 220 can be positioned on distal and mesial sides of the bracket 200. The walls 218, 220 can define a channel 820 to guide the male fastener 106 into the slot 202 of the bracket 200 as the male fastener 106 moves in the direction 816.

[0393] The bracket 200 can have a stop 204. The stop 204 can be disposed on an end of the bracket 200, which can include the gingival end of the bracket 200. The stop 204 can have an overhang 206. The overhand 206 can be configured to retain the male fastener 106 within a slot 202. The stop 204 can include a recess 810 to enable the male fastener 106 to rotate within the slot 202. The overhang 206 can have a chamfer 238 which can help enable the male fastener 106 to rotate within the slot 202. The overhang 206 can have a wedge 812 (e.g., angled surface, tapered surface, protrusion) that is similar to the protrusions 812. The wedge 812 can extend from the overhang 206 in the direction of the face 214. The wedge 812 can push the male fastener 106 into the face 214 to prevent and/or reduce sliding (e.g., slop) between the archform 100 (e.g., male fastener 106) and the bracket 200.

[0394] The bracket 200 can have a face 214. The face 214, as shown in FIG. 8D, can have a tool receiving recess 822 (e.g., recess) that can receive a tool, which is moved through the tool receiving channel 808 to deflect the tab 804 from the holding surface 806. Once the tab 804 is removed from the holding surface 806, the male fastener 806 can be removed from the slot 202.

[0395] During installation, the male fastener 106 is positioned on the face 214 (e.g., parallel to the face 214) of the bracket 200 between the walls 218, 220. The male fastener 106 is moved in the direction 816. As the male fastener 106 moves in the direction 816, the guiding channel 802 guides the tab 804 of the bracket 202. Optionally,

the male fastener 106 is angled relative to the face 214 until the tab 804 can be positioned within the guiding channel 802. The guiding channel 802 can guide a tab 804 to flex around the surface(s) of the guiding channel 804 to engage with the holding surface 806, retaining the male fastener 106 within the slot 202. The wedge 812 can push the male fastener 106 into the surface 214.

[0396] During removal, a tool (e.g., explorer tool) is positioned within the tool receiving recess 822 and/or tool receiving channel 808. The tool is moved through the tool receiving channel 808 toward the tab 804. The tool deflects the tab 804 from the holding surface 804 such that the male fastener 106 can be removed from the slot 202. The tool can, which can include simultaneously, engage a periphery of the tool receiving channel 808 to remove the male fastener 106 from the bracket 200 and/or slot 202.

[0397] Optionally, the tab 8040 can have more than one engagement stages (e.g., more than one feature that can engage with the holding surface 806 and/or another surface of the male fastener 106, such that a clinician can choose the depth into which the male fastener 106 is inserted into the slot 202. The flexible locking mechanism 804 (e.g., tab) may have more than one engagement stages. For example, for severely maloccluded teeth, a clinician may want the archform partially engaged into the slot 202. This will allow maximum articulation and flexibility of the archform 100 which can allow the archform 100 to be more easily connected to the displaced teeth. As the teeth come into occlusion, the clinician may push and lock the archform 100 further into the slot 202 to get the full expression of the archform 100. The slot 202 can have one or more tapered sides that, when the male fastener 106 is slid into the slot 202, contacts the male fastener 106. This can eliminate play between the archform 100 (e.g., male fastener 106) and the bracket 200, which can provide improved tooth control.

[0398] Optionally, the brackets described are positioned on a lingual or labial side of a patient's teeth.

[0399] Optionally, the brackets and non-sliding archforms described herein can cooperate to cause translational movement of a patient's teeth. Optionally, the same locking mechanism can be used for molars and lower anterior teeth. Optionally, the archform profiles can have enough flexibility and stretch to level and align a patient's teeth during the initial stages of malocclusion treatment. Optionally, the bracket and archforms disclosed herein can be designed reduce the risk of inadvertent coupling between brackets and the archform, for example, when removing the archform from neighboring brackets. Optionally, the brackets and archform reduce the amount of sliding

(e.g., slop) between the archform and brackets. Optionally, the archform includes features, such as handles, tabs, etc., that can be used to maneuver the archform, reducing deformation and/or damage of the archform. Optionally, the bracket is bonded to the patient's teeth with sufficient shear strength and tensile strength to reduce the likelihood of inadvertent debonding. Optionally, the brackets can be debonded from teeth using lingual debonding pliers or debonding pliers without damaging the enamel of a patient's teeth. Optionally, archforms made of nickel titanium, stainless steel, titanium-molybdenum alloy, shape memory alloy, super elastic metals, and/or other suitable alloys can be used. Optionally, the brackets can reduce adhesive intrusion into the brackets. Optionally, the same litigating mechanism can be used for all teeth. Optionally, the surfaces (e.g., lingual surfaces), and/or other surfaces, of the bracket are rounded, which can include a radius of greater than .050-0.010, 0.010–0.015, 0.015–0.020, 0.020–0.025, and/or greater than 0.025 inches. Optionally, the brackets do not open inadvertently when a patient is brushing teeth. Optionally, tie wings can be used in addition to the locking mechanisms disclosed herein. Optionally, interproximal loops of the archform do not dig into the gum line of the patient during installation of the archform.

[0400] Optionally, an archform may be activated by deflecting it away from its default position and inserting into a snapped position within an orthodontic bracket that is bonded to a tooth. When this elastic deflection occurs, the archform may exert a reaction force in the direction that returns the archform to the designed configuration, thereby transferring forces to the tooth and causing orthodontic tooth movement.

[0401] This archform activation may completely control any tooth movement in three-dimensional space.

[0402] For mesio-distal tooth movement, if there is space between adjacent teeth, snap fitting an archwire into an orthodontic bracket may cause an interproximal structure to deform in one or more directions, which may cause the archform to be activated, leading to closing of space in the mesial-distal direction. Whereas, if there is overlap between adjacent teeth, archform snap fitting into an orthodontic bracket may cause an interproximal structure to deform in a different direction, which may cause the archwire also to be activated, this time leading to opening of space in the mesial-distal direction.

[0403] For occlusal-gingival tooth movement, if the adjacent teeth are not at the same level, an archform snap fitting into an orthodontic bracket may cause connecting archwire connectors and interproximal structures to deflect in a slanted manner which

may cause the archform to be activated, leading to tooth correction in the occlusal-gingival direction.

[0404] For facio-lingual tooth movement, archform snap fitting into an orthodontic bracket may cause the wire to be pushed away from its original position which may cause the archform to be activated, leading to tooth correction in the facio-lingual direction.

[0405] The various configurations of archforms and orthodontic brackets that have been discussed may provide one or more advantages as described herein.

[0406] There may be superior mesio-distal angulation and facio-lingual inclination orthodontic control because the vertical male connector may offer a longer arm for coupling forces to the orthodontic bracket when compared to the rectangular dimensions of an edgewise appliance. Moreover, the spread of the two parallel side bars of some male connectors may make them function like a twin orthodontic bracket in providing a force couple in dealing with any axial rotation.

[0407] The interproximal structures may allow the operator to adjust the rigidity of the archform, which may provide versatility for the same archform cross-sectional configuration to be used in a wide array of cases.

[0408] The interproximal structures can be designed to allow patients to easily floss while undergoing orthodontic treatment.

[0409] The interproximal structures may be designed to have a certain type of shape (including loops, and complex 3D shapes). These shapes can be used to hold elastic rubber bands.

[0410] The archform may be designed such that it can be activated to move the teeth. This type activation may be self-activating and self-limiting because it may not require use of external forces such as power chain and coil springs to move the teeth. This type of activation may also be self-limiting because the archform may only exert forces that return the archform to its original shape, negating the need for frequent appointments.

[0411] This approach may also not permit sliding of the archform with respect to the orthodontic bracket, thus making movement of the teeth much more predictable.

[0412] FIGS. 9A and 9B illustrate a bracket assembly 201 (e.g., two piece bracket assembly). As shown in FIG. 9A, the bracket assembly 201 can include a pad (receiving pad, receiving base, base) 500 that can receive an orthodontic bracket 200, which can be coupled to the male fastener of an archform to facilitate tooth movement. The pad 500 can be bonded to a patient's tooth (e.g., on the lingual side or labial side of a

patient's tooth) and receive the bracket 200. The pad 500 can be modified for attachment to various teeth depending on tooth size and/or desired control. For example, a wider pad 500 can be used to improve tooth rotational control without increasing the width of the bracket 200. This can enable the bracket 200 to be more widely used amongst different teeth without modifying the bracket 200. Optionally, the pad 500 can be modified or different pads 500 used to enable the same style bracket 200 (e.g., a common bracket) to be more widely used amongst different teeth. This can reduce the number of varieties of brackets needed for a treatment plan, which can reduce cost and/or complexity. The shape and/or contour of the pad 500 can be economically changed because the pad 500 is separate from the bracket 200. Optionally, the bracket 200 and pad 500 can be formed together.

[0413] The pad 500 can be manufactured via a variety of techniques such as injection molding, casting, machining, additive manufacturing, etc. In some instances, metal injection molding may be preferred. The pad 500 can include a pocket (opening, void, depression, hole, receiving space) 502 to receive the bracket 200. A portion of the periphery of the pocket 502 can include filler material 504 that can be used to weld (e.g., laser weld) the bracket 200 to the pad 500. The filler material 504 can be disposed on the sides (e.g., mesial and distal sides) of the periphery of the pocket 502, such that the sides (e.g., mesial and distal sides) of the periphery of the pocket 502 can be welded (e.g., laser welded) to the sides (e.g., mesial and distal sides) of the bracket 200. Optionally, the pad 500 and bracket 200 can be tack welded together prior to laser welding.

[0414] The pad 500 can include undercut(s) (cut(s), gap(s), textured surface, void(s), slot(s)) 506 to facilitate improved bonding between the pad 500 and the patient's teeth. The undercut(s) 506 can be molded into the pad 500. Optionally, the undercuts 506 can be machined into the pad 500. The undercut(s) 506 can be disposed on a side of the pad 500 that is opposite the pocket 502. The undercut(s) 506 can extend the width of the pad 500. The undercut(s) 506 can extend between the mesial and distal sides of the pad 500. The pad 500, being separate from the bracket 200, can have undercut(s) 506 conveniently molded therein.

[0415] The pad 500 can have inclined surfaces 508, 509, similar to inclined surfaces 376 described elsewhere herein, that can facilitate inserting the male fastener 106 within the bracket 200. The inclined surface 508, 509 can be positioned on opposing sides of the retainer 208. The inclined surfaces 376 can facilitate the male fastener 106 being positioned within the slot 202 of the bracket 200 at an angle before being securely

retained within, which can include being parallel to the face 214 of the bracket 200, or removed from the bracket 200.

[0416] As described above, the bracket 200 can be disposed within the pocket 502 of the pad 500 during use. Optionally, the bracket 200 can be used independently of the pad 500 and bonded to a patient's tooth. The bracket 200 can be manufactured via a variety of techniques such as injection molding, casting, machining, additive manufacturing, etc. In some instances, metal injection molding may be preferred.

[0417] The bracket 200 can be used with an archform 100 to move a patient's teeth utilizing non-sliding mechanics. The orthodontic bracket 200 can include a slot 202 that can receive a male fastener of an archform. At least a portion of the slot 202 can be defined by a face 214 of the bracket 200. At least a portion of the slot 202 can be defined by a retainer 208. The retainer 208 can have an overhang 210, similar to the overhangs described elsewhere herein. The overhang 210 can include a curved portion 211 that extends over the face 214 of the bracket 200. The curved portion 211 can help to retain a male fastener 106 within the bracket 200.

[0418] The overhang 210 can extend over the slot 202 and help to retain a male fastener therein. The retainer 208 can be on the gingival side of the bracket 200. Optionally, the retainer 208 can be disposed on the occlusal side of the bracket 200. The retainer 208 and/or overhang 210 can include an angled surface 238 that can facilitate a male fastener being positioned within the slot 202 of the bracket 200 at an angle before being securely retained within or removed from the bracket 200. Similarly, the retainer 208 can have a recess 240 (e.g., undercut), as detailed elsewhere herein. The recess 240 can enable (e.g., facilitate) a male fastener to rotate out of or into the slot 202 of the bracket 200 without being prohibited by the retainer 208, as detailed elsewhere herein.

[0419] The retainer 208 can include a C spring 256 (e.g., spring, leaf spring). As described elsewhere herein, the C spring 256 can help to securely retain a male fastener within the bracket 200. The retainer 208 can have an opening 352 that holds the C spring 256. The opening 352 can be an oval shape to allow the C spring 256 to flex (e.g., deflect). The periphery of the opening 352 can prevent the C spring 256 from flexing beyond a desired range. The opening 352 can be oriented perpendicularly to the face 214 of the bracket 200. The C spring 256 can be perpendicularly oriented relative to the face 214 of the bracket 200. The C spring 256 can extend between and/or partially through the retainer 208 and the face 214 of the bracket 200

[0420] The C spring 256 can be exposed to at least a portion of the slot 202. The male fastener 106, when inserted into the slot 202, can contact and flex the C spring 256. The C spring 256 can apply a force to the male fastener 106 to push the male fastener 106 into stops 204, 205, which can retain the male fastener 106 within the slot 202 of the bracket 200. The C spring 256 can be positioned away from a handle 380 of the male fastener 106 during installation, reducing the risk that the C spring 256 will be damaged by tools, such as pliers, explorer tools, etc. The C spring 256 can extend through the protrusion 216. Optionally, the protrusion 216 can be offset from the C spring 256.

[0421] The bracket 200 can include stops 204, 205. The stops 204, 205 can be separated by a gap 368 therebetween. The stops 204, 205 can have cutouts 374, 375 (e.g., recesses, voids, spaces) that receive wedges 382, 383 (e.g., fingers) of the male fastener 106. The cutouts 374, 375 and wedges 382, 383 can cooperate to prevent sliding (e.g., reduce lateral movement) between the archform 100 (e.g., male fastener 106) and the bracket 200. The stops 204, 205 can include ramps (inclined surface, angled surface, ramp) 392, 393. The ramps 392, 393 can extend from the face 214 to the cutouts 374, 375. The ramps 392, 393 can be angled to interface with the wedges 382, 383. The stops 204, 205 can be positioned proximate the sides (e.g., longitudinal sides, mesial and distal sides) of the bracket 200. The stops 204, 205 can be disposed on an opposing side of the bracket 200 relative to the retainer 208.

[0422] The gap 368 can receive a handle 380 (e.g., tab) of the male fastener 106. The handle 380, positioned between the stops 204, 205, can help to prevent sliding between the archform 100 (e.g., male fastener 106) and the bracket.

[0423] The bracket 200 can have a protrusion 216 that is similar to the other protrusions 216 described herein. The protrusion 216 can extend from the face 214 of the bracket 200. The protrusion 216 can extend between longitudinal sides (e.g., mesial and distal sides) of the bracket 200. The protrusion 216 can push the male fastener 206 against the overhang 210 and/or the cutouts 374, 375 when positioned within the slot 202 of the bracket 200 for secure retention.

[0424] FIG. 10A illustrates a bracket assembly 201 with a pad 500 and bracket 200. The bracket assembly 201, pad 500, and/or bracket 200 illustrated in FIG. 10A can include the same or similar features as the bracket assembly 201, pad 500, and/or bracket 200 illustrated in FIGS. 9A and 9B. Optionally, the bracket 200 illustrated in FIGS. 9A and 9B can be used for the lower anterior teeth of a patient while the bracket

200 illustrated in FIG. 10A can be used for all other teeth of the patient (e.g., molars, etc.). The bracket 200 illustrated in FIG. 10A can be referred to as the common bracket because the bracket 200 can be used with most of the teeth of the patient.

[0425] The bracket 200 illustrated in FIG. 10A can include an aperture (hole, void, opening) 394. The aperture 394 can receive a protrusion (cylinder, projection, pillar, pin) 510 of the pad 500. The protrusion 510 can be inserted through the aperture 394. As described elsewhere herein, the bracket 200 can be tack welded to the pad 500 before laser welding during coupling. As illustrated in FIG. 10A, however, the protrusion 510 can be inserted into the aperture 394 and laser welded to bracket 200 to remove the process of tack welding before laser welding. Laser welding the protrusion 510 to the bracket 200 when positioned within the aperture 394 can prevent the bracket 200 from lifting out of the pocket 502 when one of the longitudinal sides (e.g., mesial or distal sides) of the bracket 200 is laser welded.

[0426] The bracket 200 illustrated in FIG. 10A may be narrow enough to be used on most teeth of a patient but not wide enough (e.g., insufficient distance between longitudinal sides, insufficient distance between mesial and distal sides) for effective rotation control for molar teeth. Accordingly, the pad 500 can have a width that provides effective rotation control for molar teeth without requiring the bracket 200 to be widened. The pad 500 illustrated in FIG. 10A can be wider, for improved rotational control, compared to the pad 500 illustrated in FIGS. 9A and 9B.

[0427] The pad 500 illustrated in FIG. 10A can include features similar to the bracket 200 (e.g., carry over bracket features) to improve rotational control while still using a narrow bracket 200. For example, the pad 500 can include protrusions (bumps) 514, 515, which can be similar to the protrusion 216 of the bracket 200. The protrusions 514, 515 can be distributed on opposing sides of the bracket 200. The protrusions 514, 515 can be distributed on opposing sides of the protrusion 216 of the bracket 200. The protrusions 514, 515 can be aligned with the protrusion 216 of the bracket 200. The protrusions 514, 515 can help to retain the male fastener 106 of the archform 100 within the bracket 200 to facilitate non-sliding mechanics. The protrusions 514, 515 can, similar to the protrusion 216 of the bracket 200, push the male fastener 106 of the archform 100 against the overhang 210 and/or stops 204, 205. Optionally, the protrusions 514, 515 can effectively be an extension of the protrusion 216.

[0428] The pad 500 illustrated in FIG. 10A can include inclined surfaces (angled surface, ramp) 512, 513, which can be similar to ramps 392, 393. The inclined

surfaces 512, 513 can be distributed on opposing sides of the bracket 200. The inclined surface 512 can be positioned proximate the ramp 392. The inclined surface 513 can be positioned proximate the ramp 393. The inclined surfaces 512, 513 can interface with the wedges 382, 383 of the male fastener 106. The inclined surfaces 512, 513 can interface with the wedges 382, 383 to prevent sliding (e.g., reduce lateral movement) between the archform 100 (e.g., male fastener 106) and the bracket 200 and/or control rotational movement of the tooth. Optionally, the inclined surfaces 512, 513 can be offset from the wedges 382, 383 in a neutral position but contact the wedges 382, 383 with rotational movement. Optionally, the inclined surfaces 512, 513 can effectively be an extension of the ramps 392, 393.

[0429] FIGS. 10B and 10C illustrate the male fastener 106 of an archform 100 positioned within the slot 202 of the bracket 200. The male fastener 106 can include a handle 380, which can be grasped to manipulate the male fastener 106. The handle 308 can be positioned in the gap 368 between the stops 204, 205. The handle 308 can include flange(s) (tab(s)) 396. The flange(s) 396 can be positioned on an end of the male fastener 106 and/or handle 308. The flange(s) 396 can be positioned on opposing sides of the handle 380. The flange(s) 396 can include two flanges, as illustrated.

[0430] As described elsewhere herein, the male fastener 106 can be inserted into the slot 202 of the bracket 200 at an angle, which can be facilitated by the angled surface 238 of the overhang 210 and/or the inclined surface(s) 508, 509. The male fastener 106 can be pushed against the C spring 256, which can deflect the C spring 256, and rotated toward the face 214 of the bracket 200. Optionally, the male fastener 106 can include a recess 402 (e.g., curved recess, groove) which can interface with the C spring 256, as shown in FIG. 10B. The recess 402 can be positioned opposite the handle 380.

[0431] With the male fastener 106 substantially parallel with the face 214 of the bracket 200, the male fastener 106 can be pushed by the C spring 256 against the stops 204, 205. The wedges 282, 283 can be positioned within the cutouts 374, 375 and/or contact the ramps 392, 393. The protrusion 216, as described elsewhere herein, can push the male fastener 106 against the overhang 210 and/or stops 204, 205. The protrusions 514, 515 can push the male fastener 106 against the overhang 210 and/or stops 204, 205. The ramps 392, 393 can contact the wedge(s) 282, 283, which can include pushing the wedge(s) 282, 283 against the stops 204, 205. As the male fastener 106 is pushed by the C spring 256 toward the stops 204, 205, the ramps 392, 393 can push the wedges 282, 283 into the cutouts 374, 375. Optionally, the inclined surfaces

512, 513 of the pad 500 can interface with the wedges 382, 383. Optionally, the inclined surfaces 512, 513 can be offset from the wedges 382, 383 in a neutral position but interface upon rotational movement.

[0432] As illustrated in FIG. 10C, the features of the pad 500 can enlarge the effective bracket width of the bracket 200 compared to the actual width of the bracket 200. The inclined surface(s) 512, 513 and/or protrusion(s) 514, 515 can increase the effective bracket width of the bracket 200, which can include providing increased rotational control.

[0433] The bracket assembly 201 with the separate pad 500 and bracket 200 can, as described elsewhere herein, reduce the variety of brackets 200 needed to treat a patient. Optionally, one bracket design can be used for lower anterior teeth while another bracket design can be used for molars and all other teeth. When manufacturing with metal injection molding (MIM) techniques, this can reduce mold costs by eliminating the quantity of bracket molds needed. This can result in higher volume manufacturing runs due to wider applicability of use of a bracket 200, which can reduce costs. The bracket assembly 201 can improve tooth rotational control (on any given tooth) without increasing the width of the bracket 200.

[0434] FIG. 11A illustrates a bracket assembly 201 (e.g., two piece bracket assembly). The bracket assembly 201 can include the pad 500 with the orthodontic bracket 200 coupled thereto. The orthodontic bracket 200 can receive the male fastener 106 of the archform to facilitate tooth movement. As illustrated, the male fastener 106 is securely retained by the bracket 200 via the stops 204, 205 and retainer 208 (e.g., overhang 210).

[0435] As described elsewhere herein, the handle 380 can include flange(s) 396, which can be described as forming a hammerhead type shape. The handle 380 can be disposed between the stops 204, 205 to help prevent relative movement between the bracket 200 and the male fastener 106. The handle 380 can be used to remove the male fastener 106 from the bracket 200 and/or place the male fastener 106 in the bracket 200. In some variants, the handle 380 can extend from the bracket 200 in the occlusal direction. In some variants, the handle 380 can extend from the bracket 200 in the gingival direction. In some variants, an opening/closing tool that uses equal and opposite forces can be used to place and/or remove the male fastener 106 of the archform 100. In some variants, a hemostat or forceps type tool can be used to place and/or remove the male fastener 106 of the archform 100.

[0436] For example, to remove the male fastener 106, one side of the forceps can grip the handle 380 at surface 532 (e.g., occlusal side, surface) while the other side of the forceps can grip the retainer 208 at surface 354 (e.g., gingival side or gingival surface). The operator can squeeze the forceps together to push the male fastener 106 against the C-spring 256 (e.g., oval spring), shown in FIG. 11B, which can move the male fastener 106 (e.g., occlusal edges disposed on opposing sides of the handle 380) out from under the stops 204, 205 of the bracket 200 as the C-spring 256 is compressed. The forceps can be rotated away from the stops 204, 205 to rotate the male fastener 106 such that the male fastener 106 is decoupled from the bracket 200.

[0437] The bracket 200 and/or male fastener 106 can include features to prevent over travel (e.g., excessive deflection) of the C-spring 256 (e.g., oval spring). As described elsewhere herein, the bracket 200 can include the guide 366 (e.g., guide rail, protrusion, longitudinal protrusion, bar). The guide 366 can maintain the position of the C-spring 256 within the opening 352 and/or prevent the C-spring 256 from being excessively deflected (e.g., prevent from being deflected past an elastic limit). For example, the C-spring 256, in some variants, can be deflected until contacting the guide 366. In some variants, the periphery of the opening 352 can restrict deflection of the C-spring 256 to protect against over travel. As described elsewhere herein, the opening 352 can be disposed in the retainer 208 and/or the portion of the bracket 200 opposite the retainer 200. In some variants, surface(s) 130 of the male fastener 106 can engage with the surface(s) 520 of the bracket 200 (e.g., retainer 208) to help prevent over travel of the C-spring 256 during compression. For example, the surface(s) 130 of the male fastener 106 can be displaced toward the surface(s) 520 of the bracket 200 until contract, which can prevent further deflection of the C-spring 256 (e.g., prevent over travel of the oval spring 256). The one or more of the features detailed above can prevent the oval spring 256 from over travel or being compressed beyond the elastic limit of the oval spring 256 even when the operator may squeeze the forceps excessively.

[0438] For installation, the portion of the male fastener 106 opposite the handle 380 can be disposed under the overhang 210 of the retainer 208 of the bracket 200 to contact and/or be positioned proximate the C-spring 256 such that the male fastener 106 is angled relative to the bracket 200. In some variants, the recess 402 of the male fastener 106 can contact the C-spring 256. In some variants, the operator can grab the handle 380 of the male fastener 106 to position the male fastener 106 as described above.

The inclined surfaces 508, 509 and/or chamfer 238 can assist the operator in positioning the male fastener 106 as described above.

[0439] To securely couple the male fastener 106 to the bracket 200, one side of the forceps can grip the handle 380 at surface 532 while the other side of the forceps can grip the retainer 208 at surface 354. The operator can squeeze the forceps together to push the male fastener 106 against the C-spring 256 which can enable the operator to pivot the male fastener 106 toward the bracket 200 and around the stops 204, 205 as the C-spring 256 is compressed. The operator can stop squeezing (e.g., applying a compressive force) with the forceps, or similar tool, which can release the C-spring 256 to apply a force against the male fastener 106 such that the male fastener 106 is pushed against and/or under the stops 204, 205. The C-spring 256 can be protected against over travel or deflection past an elastic limit via at least the features described elsewhere herein.

[0440] As described elsewhere herein, the bracket assembly 201 with the pad 500 and bracket 200 can enable a single bracket design to be used across several teeth. Instead of altering the bracket 200 from tooth to tooth, the pad 500 can be altered as needed from tooth to tooth. For example, the pad 500 can be different sizes and/or have different features depending on the tooth to which the pad 500 will be bonded while still being able to receive and/or bond to the bracket 200. This can reduce cost. For example, the number of styles (e.g., SKUs) of brackets 200 can be reduced, which can result in higher volume manufacturing runs of brackets 200 to reduce cost. The pad 500 can also be cheaper to manufacture than brackets 200 because pad molds can be less expensive than bracket molds, which can result in cheaper manufacturing cost due to more pad variations than bracket variations.

[0441] In some variants, a lower anterior bracket, such as the bracket 200 illustrated in FIGS. 11A–11C, can be used with pads 500 on the lower 3-3 while another style bracket 200 (e.g., illustrated in FIG. 12, can be used with a pad 500 (which may vary from tooth to tooth) on all other teeth of the patient. This can enable two bracket designs to be used during orthodontic treatment with various style pads 500.

[0442] As described above, despite using the same bracket 200, pads 500 may vary from tooth to tooth. For example, different "torque" may be added to some pads 500 to help keep the interproximal loops 103 of the archform 100 away from the gingiva of the patient. The "torque" can be implemented in the pads 500 instead of the brackets 200 because, as explained above, the pads 500 can be varied from tooth to tooth while

receiving the same style bracket 200. In some variants, the "torque" can be implemented in the pads 500 instead of the brackets 200 because the amount of "torque" can be individually tailored for each particular tooth of a patient. In some variants, the "torque" can be the angle A, as illustrated in FIG. 11C, between the surface 534 of the patient's tooth and the bottom surface of the male fastener 106. In some variants, for example, the pads 500 for lower 3-3 teeth can have ten degrees of torque (as shown in FIG. 11C) but other torque angles are contemplated, such as 5, 6, 7, 8, 9, 10, 11, 12, 13, 14, 15, 16, 17, 18, 19, 20, or more than 20 degrees. In some variants, the pads 500 for molars can have zero degrees of torque but other torque angles are contemplated, such as 1, 2, 3, 4, 5, or more degrees.. In some variants, the pads 500 for other teeth besides molars and the lower 3-3 can have five degrees of torque but other torque angles are contemplated, such as 5, 6, 7, 8, 9, and 10 degrees or more.

[0443] FIG. 12 illustrates a plurality of bracket assemblies 201 coupled to an archform 100. As illustrated, the pads 500 have widths to increase rotational control of the tooth onto which a given pad 500 is coupled. The archform 100 (e.g., archwire) can include hooks 107 (e.g., loops) that can allow for the use of elastics, such as bands, etc. This can facilitate treatment of class II and class III malocclusions.

[0444] FIGS. 13A and 13B illustrate a bracket 600. The bracket 600 can include some or all of the features described in reference to other brackets or assemblies described herein. The bracket 600 can include undercut(s) (cut(s), gap(s), textured surface, void(s), slot(s)) 506, similar to those described in reference to the foregoing pads. The undercuts 506 can facilitate improved bonding between the bracket 600 and the teeth of a patient (e.g., adhesive can flow into the undercuts 506). In contrast to some of the foregoing assemblies, the bracket 600 may, in some variations, not have a separate pad but, instead, include the undercuts 506 on a side of the bracket 600. The bracket 600 can be referred to as a one-piece bracket or one-piece bracket/pad assembly.

[0445] The bracket 600 can include a C spring 256 (e.g., spring, leaf spring, spring locking pin, locking spring, round locking spring). The C spring 256 can be positioned within an opening 352 of the bracket 600 and under the overhang 210 of the bracket 600. The opening 352 can extend through a bottom of the bracket 600 (e.g., side of the bracket 600 of the undercuts 506). The C spring 256 can be installed through the opening 352 extending through the bottom of the bracket 600. The C spring 256 can include one or more tabs 608 (i.e., flanges) that can engage with a periphery of the opening 352 to facilitate positioning the C spring 256 therein. The opening 352, on the

bottom side of the bracket 600, can be covered to help secure the C spring 256 in place and/or to impede adhesive from flowing into the opening 352. The opening 352 can be covered via a variety of techniques, such as with sheet metal, a mesh pad, and/or others. In some variants, the sheet metal covering the opening 352 can be welded at one or more locations 604. In some variants, the mesh pad can facilitate improved bonding with the surface of the tooth upon which the bracket 600 is located. In some variants, the bracket 600 can include a groove 606 (i.e., channel) that can facilitate positioning or removing the cover over the opening 352. For example, the groove 606 can enable a tool to have access to the cover over the opening 352 and/or enable the tool to place the cover over the opening 352.

[0446] The bracket 600 can include a protuberance 602, also referred to as a bump, engagement region, protrusion, etc. The protuberance 602 can be disposed on the retainer 208, which can include being formed as part of the retainer 208. The protuberance 602 can be engaged by a tool (e.g., opening/closing tool) to install or remove the male fastener 106 from the bracket 600.

[0447] FIG. 13C. illustrates a segment of an archform 100 coupled with brackets 600. The segment of the archform 100 illustrated can correspond to specific teeth or a specific portion of the arch of the patient, such as the anterior teeth. The archform 100 includes a male fastener 106 that can be coupled to the bracket 600. The male fastener 106 can include a tongue 380 (i.e., tab, handle) that can be disposed between the stops 204, 205. Stated differently, the tongue 380 can be disposed in the gap 368 between the stops 204, 205. The handle 308 can include flange(s) 396 (tab(s)) that can help secure the male fastener 106 to the bracket 600.

[0448] The male fastener 106 can include arms 612 that can help secure the male fastener 106 and bracket 600 together. For example, the male fastener 106 can include arms 612. In some variants, the male fastener 106 can include two arms. In some variants, the male fastener 106 can include one, three, four, or more arms 216. The arms 612 can grip, hold, grasp, hug, snap around, and/or otherwise interface with the bracket 600 (e.g., mesial and distal sides of the retainer 208) to provide improved grip control. In some variants, the arms 612 can snap around the lateral sides (e.g., me of the retainer 208. The arms 612 can extend in a direction that is opposite the tongue 380. In some variants, the arms 612 can curve outward away from a central longitudinal axis of the male fastener 106. The arms 612 can hold the archform 100 (e.g., male fastener 106) in place on the bracket 600 as an operator positions a tool (e.g., open/closing tool) to secure the

archform 100 to the bracket 600, as described herein. Specifically, the arms 612 can hold, which can include lightly hold, the male fastener 106 to the bracket 600 during the installation process and further secure the male fastener 106 to the bracket 600 after installation. For example, the arms 612 can hold the archform 100 in position (e.g., couple the male fastener 106 to the bracket 600) while a clinician positions a tool (e.g., opening/closing tool) to secure the archform 100 to the bracket 600 (e.g., position the male fastener 106 within the bracket 600). This can free the clinician to not hold the archform 100 with an opposite hand while repositioning the tool (e.g., opening/closing tool) with the other hand. The arms 612 can couple to the retainer 208 of the bracket 600. For example, the arms 612 can extend to engage, which can include couple to, contact, grip, etc., the mesial and distal sides of the retainer 208. In some variants, the arms 612 can apply a force to the retainer 208 when secured there around. In some variants, the arms 612 can be offset from the interproximal loops 103 extending from the male fastener 106. In some variants, the arms 612 can have a curvature that corresponds to a portion of the interproximal loops.

[0449] FIG. 13D illustrates a segment of an archform 100, which can include at least some or all of the features of the archforms described elsewhere herein. The segment of the archform 100, illustrated in FIG. 13D, can be used with molars. The male fastener 106 can include a recess 402 (e.g., curved recess, groove) which can couple to the retainer 208 of the bracket 600. The male fastener 106 can be disposed in the bracket 600 such that the recess 402 receives the C spring 256. The male fastener 106 can include curves 614, also referred to as hips. The curves 614 can be disposed on opposing lateral sides of the male fastener 106 (e.g., mesial and distal sides). The curves 614 can engage with features of the bracket 600, which can facilitate rotational control. For example, in some variants, the curves 614 can engage with the retainer 208 and/or other portions of the bracket 600.

[0450] The archform 100 can include arms 612. The arms 612 can extend in a direction opposite of the tongue 380. The arms 612 can be varying lengths. The arms 612 can be straight, curved, and/or in other configurations. The arms 612 can include engagement features 613 (also referred to as tabs, flanges, etc.) which can engage with features of the bracket 600, such as the retainer 208, to hold the male fastener 106 to the bracket 600. The engagement features 613 can be disposed proximate an end of the arms 612. The engagement features 613 can extend inward, which can include toward a central longitudinal axis of the male fastener 106. During installation, a clinician can engage the

archform 100 with molar brackets first. The arms 612 can secure the archform 100 to one or more brackets 600, which can prevent the archform 100 from disengaging with the brackets 600 as the clinician repositions an opening/closing tool to place a male fastener 106 in the bracket 600.

[0451] The archform 100 can be conveniently cut to a desired length, as illustrated in FIG. 13D. The bracket 600 can shield the patient from discomfort burrs from the cutting operation. The interproximal loops 103 can be engaged by elastics as part of a treatment plan. In some variants, the interproximal loops 103 can act as hooks to engage elastics.

[0452] FIG. 13E illustrates an archform 100 with customized features 616. As described elsewhere herein, the archform and brackets can be positioned on the labial or lingual side of a patient's teeth. The customized features 616 can be aesthetically pleasing (e.g., stylized) or convey a message. Accordingly, the archform 100 with the customized features 616 can be disposed on the labial side of the teeth. In some variants, the customized features 616 can include letter(s), logo(s), symbol(s), and/or other features. For example, as illustrated, the customized features 616 include letters conveying a message, which can enable the patient to display the message upon smiling. The customized features 616 can be part of and/or disposed at the interproximal loops 103. In some variants, the customized features 616 can be positioned on other portions of the archform 100. In some variants, the customized features can be a different color than other portions of the archform 100 to enable easier identification.

[0453] FIGS. 14A–14B illustrate a tool 700, also referred to as an opening/closing tool, which can be used to position a male fastener 106 of an archform 100 in a bracket 600. The tool 700 can be used to grab portions of the archform 100, including the male fastener 106, during installation and removal. The tool 700 can include two members 702 that pivot relative to each other at pivot 704. Each member 702 can include loops 703, also referred to as grasping portions, which can be gripped by the clinician to rotate the members 702 relative to each other to grab or release a portion of the archform 100. For example, FIG. 14A illustrates the tool 700 gripping a male fastener 106 within a bracket 600. As shown in FIG. 14B, each of the members 702 can include a groove 706 that can facilitate a secure grip of the male fastener 106 and/or bracket 600, which can include the protuberance 602. The groove 706 of one member 702 can engage with the tongue 708 of the male fastener 106 and the groove 706 of the other member 702 can engage with the protuberance 602 of the bracket 600. The tool

700 can engage/disengage the archform 100 in the occlusal/gingival direction. The tool 700 can use equal and opposite force to insert/remove the archform 100 from the bracket 600, which can reduce discomfort to the patient. The tool 700, in some variants, can be molded as one. FIG. 14C illustrates a tool 701, such as a hemostat. The tool 701 can be used to grasp, such as grasp portions of the archform 100, including the male fastener 106, during installation and removal. The tool 701 can include two members 702 that can pivot relative to each other to grasp. The tool 701 can include tips 703. The tips 703 can be formed via a variety of techniques, which can include by way of metal injection molding (MIM) manufacturing. The tips 703 can be attached to the two members 702—e.g., one tip 703 to each member 702. The tips 703 can be attached (e.g., laser or brazed) onto the two members, respectively. In some variants, the tips 703 can be attached (e.g., laser or brazed) onto ends of the two members, respectively. In some variants, the tool 701 can be bought off the shelf and the tips 703 manufactured and attached thereto.

[0454] During installation, the clinician can grip, which can be via the tool 700, a segment of the archform 100 that is to be coupled with the molars or other portion of the arch of the patient. The clinician can engage the arms 216 of the male fastener 106 with the bracket 600 disposed on the molar or other tooth of the patient, which can include positioning the arms 216 on opposing sides (e.g., mesial and distal) of the retainer 208 of the bracket 600. The male fastener 106 can be positioned at an angle relative to the face 214 of the bracket 600, as described elsewhere herein. For example, the inclined surfaces 508, 509 and/or angled surface 238 can enable the male fastener 106 to be positioned at an angle relative to the face 214 of the bracket 600. With the arms 216 holding the male fastener 106 onto the retainer 208 of the bracket 600, the clinician can release the grip of the tool 700 on the male fastener 106 to reposition the tool 700. The tool 700 can be repositioned such that one member 702 engages the tongue 380 of the male fastener 106 and the other member 702 engages the protuberance 602 of the bracket 600, which can include engaging the groove(s) 706 as illustrated in FIG. 14B. The clinician can squeeze the loops 703 together to apply opposite and equal forces onto the male fastener 106 and the protuberance 602 of the retainer 208 with the members 702, which can compress the C spring 256. With the C spring 256 compressed, the clinician can rotate the male fastener 106 towards the face 214 of the bracket 600, which can include positioning the male fastener 106 parallel to the face 214 of the bracket 600. The clinician can release the members 702 to allow the C spring 256 to push the male fastener 106 into the cutouts 374, 375 (also referred to as spaces or pockets) of the stops 204, 205,

securing the male fastener 106 within the slot 202 of the bracket 600. As described elsewhere herein, the protrusion 216 (bump) can push the male fastener 106 against the overhang 210 to secure the male fastener 106 within the slot 202 of the bracket 600.

[0455] During removal, the clinician can grip, which can be via the tool 700, the male fastener 106 and the bracket 600 such that one member 702 engages the tongue 380 of the male fastener 106 and the other member 702 engages the protuberance 602 of the bracket 600, which can include engaging the groove(s) 706 as illustrated in FIG. 14B. The clinician can squeeze the loops 703 together to apply opposite and equal forces onto the male fastener 106 and the protuberance 602 of the retainer 208 with the members 702, which can compress the C spring 256. With the C spring 256 compressed, the male fastener 106 can be moved out from the cutouts 374, 375 of the stops 204, 205. The clinician can rotate the male fastener 106 away from the face 214 of the bracket 600, which can include positioning the male fastener 106 at an angle relative to the face 214 of the bracket 600. The inclined surfaces 508, 509 and/or angled surface 238 can enable the male fastener 106 to be positioned at an angle relative to the face 214 of the bracket 600. The clinician can release the grip of the tool 700 on the male fastener 106 and protuberance 602 and reposition to grip the male fastener 106 for removal from the bracket 600. In some variants, the bracket 600 does not have a protuberance 602 and the member 702 can engage another feature of the bracket 600.

[0456] FIG. 15A illustrates a segment of an archform 800. The archform 800 can have a configuration that is set for an individual patient. The archform 800 can be installed on the labial or lingual side of a patient's teeth. The archform 800 can be installed in the mouth of a patient by the patient or a clinician. Installation by the patient can advantageously reduce or eliminate the need to visit an orthodontic office in person. In some variants, the archform 800 can be installed on the teeth of the patient without brackets. The archform 800 can include a reduced profile, which can improve a patient's comfort. The small profile (i.e., low profile) of the archform 800 can reduce or eliminate occlusions with the opposite arch. The archform 800 can be adhered to the teeth of the patient as described below, which can reduce chair time at a clinician's office to prepare teeth for bonding. The archform 800 can include a small profile, which may reduce speech impediments. In some variants, the small profile of the archform 800 can prevent or lessen bulging out of the lips of the patient after installation. The archform 800 may not need to be removed from the mouth of the patient for eating or drinking, reducing

compliance issues that may occur with trays. The archform 800 can be configured to ease flossing.

[0457] The archform 800 can include a plurality of male fasteners 106. The male fasteners 106 can be flat. The male fasteners 106 can be a variety of shapes, which can include having four rounded corners with one side being larger than the other. Adjacent male fasteners 106 can be separated by an interproximal loop 103, which can apply a force on the teeth of the patient and/or be coupled with elastics according to a treatment plan. In some variants, a straight segment or other configuration can separate adjacent male fasteners 106. The interproximal loops 103 can extend in the gingival or occlusal directions.

[0458] The male fasteners 106 can be coupled, which can include attached, adhered, and/or otherwise fixed, to an mounting pad 803, also referred to as an adhesive foam layer, foam release tab, tab, foam mounting pad, mounting element, etc. In some variants, the mounting pad 803 includes an adhesive on opposing sides, one side adhered to the male fastener 106 and the other adhered to a protective layer 802, also referred to as a protective peel layer. In some variants, the mounting pad 803 can be referred to as double-sided tape. The mounting pad 803 can be various shapes, which may vary depending on tooth size. For example, a larger mounting pad 803 may be desired for a larger tooth while a smaller mounting pad 803 may be desired for a smaller tooth. In some variants, a larger mounting pad 803, e.g., one with a larger adhesive surface, may provide increased rotational control. The mounting pad 803 can include a shape with three curved corners, with one side of the mounting pad 803 being larger than the other. The mounting pad 803 can have a periphery that is the same as a portion of the male fastener 106. For example, the larger end of the mounting pad 803 can have a periphery that is the same or similar to the male fastener 106. The mounting pad 803 can include a hole 378, which can be engaged by a tool to manipulate the mounting pad 803 and/or archform 800. The hole 378 can receive at least a portion of a tool (e.g., explorer, explorer tool) to manipulate the mounting pad 803.

[0459] The protective layer 802 can be removed to expose an adhesive surface of the mounting pad 803. The protective layer 802 can have a portion 805 (also referred to as a tab) that extends beyond the periphery of the mounting pad 803 when positioned thereon. The portion 805 can extend in an occlusal, gingival, or other direction. In some variants, the portion 805 extends away from the male fastener 106, which can be in the same direction as the interproximal loops 103.

[0460] The archform 800 can be formed per a patient treatment plan. For example, the archform 800 can be configured to be placed on the maloccluded teeth of the patient, such that the archform 800 can exert forces on the teeth to move the teeth from a first position to a second position. The archform 800 can be formed via scans and digital models of the patient's teeth. In some variants, the archform 800 can become soft and/or more pliable when immersed in fluid, such as water, that is either above or below body temperature, depending on the material properties of the archform 800. This can make manipulation of the archform 800 easier during installation.

[0461] During installation, the protective layer 802 can be removed to expose the adhesive surface of the mounting pad 803 that is attached to a male fastener 106. The mounting pad(s) 803 with the adhesive surface exposed can be pressed against respective teeth of the patient according to a treatment plan to adhere the mounting pad 803 to the respective surface of the teeth of the patient. To remove the archform 800, the clinician or patient can pull the mounting pad 803, which can stretch the mounting pad 803, by the portion that extends beyond the periphery of the male fastener 106 such that the adhesive bond between the adhesive surface of the mounting pad 803 and the tooth is broken. In some variants, the clinician or patient can pull the mounting pad 803, which can stretch the mounting pad 803, in a direction that is parallel to the surface of the tooth upon which the mounting pad 803 is adhered to break the adhesive bond between the mounting pad 803 and the tooth of the patient. In some variants, the clinician or patient can pull the mounting pad 803 in the lingual and/or occlusal direction to break the adhesive bond, which can include stretching and breaking the adhesive bond and/or mounting pad 803. In some variants, the clinician or user can interface with the hole 378, which can be via a tool, to pull the mounting pad 803 to break the adhesive bond. In some variants, the clinician or user can pull the mounting pad 803 in the lingual direction to stretch and break the foam adhesive layer between the archform 800 and the tooth. The archform 800 can be supplied to a patient or clinician with extra mounting pads 803, such that a mounting pad 803 can be replaced if compromised (e.g., archform 800 is dropped to a contaminated surface with an adhesive surface of the mounting pad 803 exposed) to facilitate multiple installation attempts.

[0462] FIG. 15B illustrates caps 804. The caps 804 can, in some variants, be referred to as veneers or porcelain veneers. The caps 804 can be thin. The caps 804 can be incorporated into the archform 800 to conceal features of the archform 800 and/or facilitate an aesthetic look. For example, the back surface of the caps 804 (or other

surface) can be coupled, which can include at least adhered, fixed, attached, etc., to the male fasteners 106, other features of the archform 800, and/or tooth of the patient, which can be via a mounting pad similar to the mounting pad 803, to conceal features of the archform 800 and/or facilitate an aesthetic look. In some variants, a protective layer can be removed, by the patient or clinician, from a mounting pad adhered to the cap 804 to expose an adhesive surface which can be pushed against the surface of the patient's respective tooth and/or male fastener 106 to couple the cap 804 to the patient's tooth. In some variants, a portion of the mounting pad adhered to the cap 804, which can be a transparent tab or portion, can protrude beyond the periphery of the cap 804 when the cap 804 is adhered to the surface of the patient's tooth and/or male fastener 106. The portion of the mounting pad protruding beyond the periphery of the cap 804, which can be a transparent tab or portion, can be pulled and/or stretched by the patient or clinician to break the adhesive bond between the surface of the patient's tooth and the adhesive surface of the mounting pad. In some variants, the adhesive can include a whitening solution to whiten the patient's teeth while the patient wears the appliance. In some variants, the back surface of the caps 804 can include disinfectant or other solution to prevent decalcification. In some variants, the mounting pad on the back surface of the cap(s) 804 can prevent or reduce the existence of gaps (e.g., nooks and crannies) between the caps 804 and the tooth surface, which may eliminate or reduce the need to include a disinfectant or other solution to prevent decalcification. The archform 800 can be part of a treatment plan using multiple archforms 800, as described elsewhere herein. An initial archform 800 can be removed as described herein and a second archform 800 can be installed as needed to further move maloccluded teeth. In some variants, a third, fourth, or more archforms 800 can be installed and removed in series as part of a treatment plan.

[0463] The caps 804 can be tooth-shaped in three dimensions, which can provide a superior fit on a respective tooth. The caps 804 can be shaped to correspond to a respective tooth of the patient, which can be based on digital scans and/or models of the patient's teeth. In some variants, the caps 804 can be generically shaped to correspond to a variety of teeth. In some variants, the caps 804 can be colored and/or shaped to provide aesthetic qualities to a patient's smile once installed In some variants, the caps 804 can include various color(s), design(s), logo(s), letter(s), symbol(s), etc. to customize the caps 804. In some variants, the color of the caps 804 can match the color of the patient's teeth.

[0464] In some variants, the archform 800 can be installed using a soluble structure 808, such as a soluble tray or IDB tray, as shown in FIG. 15C. In some variants,

the soluble structure 808 can be water-soluble, which can include being made of melted/dried (caramelized) sugar or cellulose. The soluble structure can be structurally stiff when dry to hold the archform 800 incorporated therewith in the shape of the current patient malocclusion, which can enable the patient or clinician to easily install the archform 800. The patient or clinician can rinse the patient's mouth with water after installation—dissolving the soluble structure 808. In some variants, the soluble structure 808 can dissolve without leaving solid waste. The soluble structure 808 can be easier to use than the typical IDB trap, which can facilitate patient installation. The soluble structure 808 can provide an appearance that is more consumer oriented.

[0465] During installation, the protective layers 805 covering adhesive surfaces of mounting pads 803 that are attached to respective male fasteners 106 of an archform 800 can be removed. With the archform 800 held in the shape of a patient's current malocclusion by the soluble structure 808, the archform 800 can be placed on the patient's teeth with the soluble structure 808. After placement, the patient's mouth can be rinsed with a liquid, such as water—causing the soluble structure 808 to dissolve. In some variants, the caps 804 can be adhered to the male fasteners 106 and/or patient's teeth.

[0466] FIG. 16A illustrates a bracket 900. The bracket 900 can include some or all of the features described in reference to other brackets or assemblies described herein. Some features of the bracket 900 may be replaced with features described in reference to other brackets or assemblies described herein. The bracket 900 can be disposed on the lingual or buccal side of a patient's teeth. The bracket 900 illustrated in FIGS. 16A–16C and 16E can be attached to any tooth of the patient but may be particularly suited for a molar.

[0467] The bracket 900 can couple with an archform to facilitate moving a patient's teeth using non-sliding mechanics. In some variants, sliding and/or non-sliding mechanics can be used. In some variants, the bracket 900, and the other brackets described herein, can have utility when used with archforms of different configurations than those described herein. The bracket 900 can include a slot 202, also referred to as a receiving region or receiving space, that can receive a connector (e.g., male connector) of an archform therein such that the connector is prevented from sliding relative to the bracket 900 when installed in a patient's mouth. The slot 202 can be positioned between a retainer 208 and stops 204, 205. The slot 202 can be at least partially defined between the retainer 208, stops 204, 205, and a face 214 of the bracket 900.

[0468] As described herein, the retainer 208 can help to retain a male connector within the slot 202. The retainer 208 can at least be positioned proximate or at a gingival or occlusal side of the bracket 900. The retainer 208 can extend from the face 214 of the bracket 900. The retainer 208 can include one or more features to improve handling the bracket 900. For example, the retainer 208 can have a protuberance 602, also referred to as a bump, protrusion, or engagement region, that can be gripped by a tool during handling of the bracket 900. The protuberance 602 can extend in a gingival or occlusal direction.

[0469] The retainer 208 can include one or more features to improve retention of the male connector received in the slot 202 of the bracket. For example, the retainer 208 can include an extension 210, e.g., overhang. The overhang 210 help hold the male connector within the slot 202. The overhang 210 can be offset from the face 214. The overhang 210 can extend over the slot 202 and/or face 214. The overhang 210 can include a curved portion 211 that extends over the face 214 of the bracket 900. The retainer 208 and/or overhang 210 can include an angled surface 238 that can facilitate a male connector being positioned within the slot 202 of the bracket 900 at an angle before being rotated toward the face 214 of the bracket and being locked within the bracket 900, such as in the slot 202. The retainer 208 can include a recess 240, also referred to as a gap, undercut, cutout, space, etc., that can facilitate the male connector being rotated in and out of the slot 202 of the bracket 900 as detailed herein.

[0470] The bracket 900 can include a spring 256 (e.g., lock spring) that can facilitate locking the male fastener of the archform within the bracket 900. The spring 256 can be a compressible material with resilient properties that can be biased to a certain position. The spring 256 can be a C spring, rounded spring, leaf spring, etc. The spring 256 can be housed within an opening 352 . The opening 352 can be disposed through at least a portion of the retainer 208. As illustrated in FIGS. 16B and 16C, the C spring 256 can be inserted into the opening 352 by way of the face of the bracket 900 that is opposite the face 214. The C spring 256 can be exposed to the slot 202 such that the male connector can contact the C spring 256 when positioned within the slot 202. The C spring 256 can be oriented with a longitudinal axis thereof oriented perpendicularly relative to the plane of the face 214. The opening 352 can be contoured and/or shaped to prevent titling and/or rattling of the C spring 256 within the opening 352. The opening 352 can be bounded by a periphery that can help to prevent the C spring 256 from deflecting beyond a desired range (e.g., beyond elastic deformation).

[0471] The C spring 256 can be positioned around a guide 366 (e.g., guide rail, protrusion, longitudinal protrusion, bar), as shown in FIGS. 16B and 16C. For example, the longitudinal free ends of the C spring 256 can be positioned on opposing sides of the guide 366 such that the longitudinal free ends apply a compressive force thereon to secure the C spring 256 in position. The gap of the C spring 256 between the longitudinal free ends can be positioned over the guide 366. The guide 366 can be disposed on a periphery of the opening 352. The guide 366 can help to maintain the position of the C spring 256 within the opening 356. The guide 366 can include a periphery and/or cross-sectional size that increases in size as the guide extends farther into the opening 356. This increasing profile can help secure the C spring 256 to the guide 366. For example, the longitudinal free ends of the C spring 366 can more securely grip the larger periphery of the guide 366 as the C spring 366 is inserted into the opening 352.

[0472] The spring 366, in some variants, can be made of a superelastic material (e.g., NiTi). The spring 366 can be heat treated to raise or lower the transformation temperature of the material forming the spring 366. Accordingly, the spring rate of the spring 366 can be modified (e.g., optimized) via heat treating, which can alter the amount of force that a clinician needs to provide to insert or remove the male connector 106 from within the slot 202 of the bracket 900. For example, heat treating the spring 366 to raise the transformation temperature can reduce the spring rate, making insertion and removal of the male connector 106 easier (e.g., require less force from the clinician). In some variants, exposing the spring 366 to cold temperatures (e.g., spray with cold water) can reduce the spring rate of the spring 366. Cold temperatures, in some variants, can be at least those temperatures lower than body temperature. The exposure to cold temperatures, in some variants, can change the spring 366 from an austenite phase into the martensite phase. Body temperature can warm the spring 366, returning the spring rate to a pre-cold-exposure level.

[0473] With the C spring 366 positioned within the opening 352, a sheet can be secured over the opening 352 to help prevent adhesive, such as a bonding agent, from entering into the opening 352. In some variants, a mesh can be applied over the sheet to increase bonding strength between the bracket 900 and a tooth surface. The sheet can be coupled to the bracket 900 via a variety of techniques which can include laser welding, adhesive, etc. As described herein, with the male connector of an archform in the bracket 900, the C spring 366 can apply a force to the male connector that pushes the male

connector against and/or at least partially under the stops 204, 205 such that the male connector is locked within the slot 202 of the bracket 900.

[0474] The stops 204, 205 can be proximate an opposite end of the bracket 900 relative to the retainer 602. In some variants, the stops 204, 205 can be in a mirrored configuration about a central plane of the bracket 900. The stops 204, 205 can include receiving spaces 374, 375, respectively. The receiving spaces 374, 375 can be at least partially bounded by extensions (e.g., overhangs) of the stops 204, 205. The receiving spaces 374, 375, which can also be referred to as pockets or cutouts, can receive, respectively, a portion of the male connector therein to secure the male connector within the slot 202. In some variants, the bracket 900 can include two stops 204, 205. In some variants, the bracket 900 may include one, three, or four or more stops that can help retain the male connector of the archform within the bracket. The stops 204, 205 can be spaced apart from each other, which can be in the mesial-distal direction. A gap 368 can separate the stops 204, 205. The gap 368 can receive a portion of the male connector, as described herein. The portion of the face 214 spanning the gap 368 can be at least flat, angled, or curved. The portion of the face 214 spanning the gap 368 can be angled relative to other portions of the face 214 and curved at an end of the bracket 900.

[0475] The bracket 900 can include ramps 392, 393. The ramps 392, 393 can also be referred to as inclined surfaces, protrusions, angled surfaces, wedges, bumps, etc. The ramps 392, 393 can extend away from the face 214 of the bracket 900. The ramps 392, 393 can push the male connector against the stops 204, 205 to help secure the male connector within the slot 202. The ramps 392, 393 can push the male connector against the overhangs of the stops 204, 205. The ramps 392, 393 can include a flat surface that can engage the male connector when the male connector is secured within the slot 202. In some variants, the ramps 392, 393 can extend beyond a width of the stops 204, 205, respectively, which can help improve rotational control of a tooth.

[0476] The bracket 900 can include a protrusion 216 (e.g., bump). The protrusion 216 can extend from the face 214. The protrusion 216 apply a force against the male connector, when positioned within the slot 202, to push the male connector against the stops 204, 205 and/or overhang 210 of the retainer 208 to help secure the male connector. The protrusion 216 can extend laterally beyond a width of the retainer 208. The protrusion 216 can extend laterally beyond the stops 204, 205. In some variants, the opening 352 can disrupt a portion of the protrusion 216, which can help improve rotational control of a tooth.

[0477] The bracket 900 can include inclined surfaces 508, 509 that can facilitate inserting a male connector within the slot 202 of the bracket 200 before rotating the male connector toward the face 214 of the bracket 900 to lock the male connector into place. The inclined surfaces 508, 509 can be positioned on opposing sides of the retainer 208.

[0478] The bracket 900 can include lateral extensions 902, 903, which can also be referred to as lateral wings. The lateral extensions 902, 903 can help the bracket 900 to better control movement of a molar. For example, the lateral extensions 902, 903 can facilitate better rotational control. The lateral extensions 902, 903 can also provide more surface area for a textured surface 506 for improved bonding.

[0479] The bracket 900 can include a textured surface 506, also referred to as a surface with undercuts, cuts, gaps, voids, and/or slots, which is illustrated in FIG. 16C. The textured surface 506 can be disposed on a side of the bracket 900 that is opposite the face 214. The textured surface 506 can facilitate bonding the bracket 900 to a surface of the patient's teeth. Specifically, an adhesive applied to the textured surface 506 can bond the textured surface 506 to the surface of the patient's tooth. The textured surface 506 can provide an increased surface area to facilitate improved bonding compared to an un-textured surface.

[0480] FIG. 16D illustrates a male connector 106 of an archform 100. The male connector 106 can also be referred to as a connector, fastener, male fastener, etc. The male connector 106 and/or archform 100 can include some all of the features described in reference to other brackets or assemblies described herein. Some features of the male connector 106 and/or archform 100 may be replaced with features described in reference to other male connectors 106 and/or archforms 100.

[0481] The male connector 106 can be retained within the slot 202 of a bracket 900 as described herein. The male connector 106 can be oriented in different orientations to move a tooth of a patient. The male connector 106 can be disposed between interproximal structures 103, which can also be referred to as interproximal loops, bends, angles, features, etc. The interproximal structures 103, as described herein, can apply forces to adjacent male connector(s) 106 to move teeth of a patient. The interproximal structures 103 can have varying widths, lengths, curvatures, bends, etc. to apply varying forces as desired.

[0482] The male connector 106 can have arms 612. The arms 612 can extend in a direction that is opposite that of a tab 380 (e.g., tongue). The arms 612 can extend in

at least an occlusal or gingival direction. The arms 612 can grip one or more features of the bracket 900 to help secure the male fastener 106 and/or provide improved control of a tooth of the patient. The arms 612 can grip the retainer 208. For example, the arms 612 can grip, hold, grasp, hug, snap around, and/or otherwise interface with the mesial and distal sides of the retainer 208. In some variants, the arms 612 can hold the archform 100 (e.g., male fastener 106) in place on the bracket 900 as an operator positions a tool to secure the archform 100 to the bracket 900, as described herein. The arms 612 can include outer sides that are curved, which can help the arms 612 better grip the retainer 208. A recess 402, also referred to as a gap, can be disposed between the arms 612. The recess 402 can receive the C spring 256 when the male connector 106 is locked into the slot 202 of the bracket 900. The periphery defining at least a portion of the recess 402 can contact the C spring 256. The C spring 256 can apply a force against the periphery of the recess 402 to push the male connector 106 against the stops 204, 205, which can position a portion of the male connector 106 under overhangs of the stops 204, 205. The male connector 106 can include contact surfaces 910, 911 which can contact the stops 204, 205. The contact surfaces 910, 911 can be flat to provide a secure point of contact with the stops 204, 205. The stops 204, 205 can have corresponding flat surfaces. The contact surfaces 910, 911 can be disposed on a side of the male fastener 106 that is opposite the arms 612 and/or recess 402. The contact surfaces 910, 911 can be disposed on opposing sides of a tab 380.

[0483] The tab 380 can be disposed on a side of the male connector 106 that is opposite the arms 612 and/or recess 402. The tab 380 can be disposed in the gap 368 between the stops 204, 205 when the male connector 106 is disposed in the slot 202 of the bracket 900. The tab 380 can contact inner sides of the stops 204, 205, which can help to prevent sliding of the male connector 106 in a mesial-distal direction relative to the bracket 900. The tab 380 can extend in a gingival or occlusal direction, depending on the desired orientation. The tab 380 can include a groove 112. The groove 112 can be disposed on an end of the tab 380. The groove 112 can receive a tool to facilitate positioning the male connector 106 into the slot 202 of the bracket 900 or removing the male connector 106 therefrom. The groove 112 can help to prevent inadvertent sliding of a tool being used to place the male connector 106 into the slot 202. The male connector 106 can include curves to reduce stress concentrators.

[0484] As described herein, the archform 100 can be formed with a variety of techniques. In some variants, the archform 100 is cut from a sheet of material, which can

include shape memory materials and/or others. The sheet of material can be flat having two opposing parallel sides. The archform 100 can be cut via a variety of techniques (e.g., laser cut, waterjet cut, plasma cut, punching, etc.) from the sheet of material. The sheet of material can have a uniform thickness but features of the archform 100 can be cut to have varying widths to apply different forces to teeth according to a treatment plan. For example, the archform 100 can have more rigid features as a patient progresses through a treatment plan. The archform 100 can have interproximal loops 103 with narrower widths at the beginning of a treatment plan to improve user comfort. The archform 100 can have interproximal loops 103 with wider widths at the middle or end of a treatment plan. The archform 100 can have male connectors 106 and interproximal structures 103 in an alternating pattern. In some variants, more than one interproximal structure 103 is disposed between adjacent male connectors 106. In some variants, no interproximal structure(s) 103 are disposed between adjacent male connectors 106. In some variants, the archform 100 can include separate segments corresponding to different portions of a patient's dental arch. In some variants, the archform 100 is not coupled to all teeth of the patient. In some variants, the archform 100 is coupled to every tooth of the patient. In some variants, the archform 100 can include straight sections.

[0485] FIG. 16E illustrates the male connector 106 coupled to the bracket 900. As illustrated, the C spring 256 pushes the male connector 106 against the stops 204, 205 and/or under at least a portion of the stops 204, 205. The contact surfaces 910, 911 can contact the stops 204, 205. The force applied by the C spring 256 can lock the male connector 106 under the overhangs of the stops 204, 205 and the overhang 210 of the retainer 208.

[0486] The bracket 900 and/or male fastener 106 of the archform 100 can include modifications to accommodate the various teeth of the patient, such as the molars, bicuspids, lower anterior, and upper central teeth.

[0487] FIG. 17A illustrates the bracket 900 that can be attached to any tooth of the patient but may be particularly suited for a lower anterior tooth. As illustrated, the bracket 900 may omit the lateral extensions to accommodate for the narrow width of the lower anterior teeth. The bracket 900 configured for the lower anterior teeth may have a narrower overall width compared to the bracket 900 configured for molars or other larger teeth. The width of the retainer 208 can be narrowed compared to a configuration for molars. The stops 204, 205 can be spaced inward from an edge of the bracket 900, which can be from a gingival or occlusal edge of the bracket 900.

[0488] As illustrated in FIG. 17B, the male connector 106 can include one or more features to indicate that the male connector 106 is configured to be positioned on the lower teeth of a patient. For example, the male connector 106 can include an aperture 912. The male connector 106 can include other modifications to facilitate coupling with a bracket 900 configured for use on a specific tooth of the patient, such as the size of the tab 380, distance between the arms 612, size of the recess 402, and/or others.

[0489] FIG. 18 illustrates the bracket 900 that can be attached to any tooth of the patient but may be particularly suited for an upper central tooth of the patient. As illustrated, the bracket 900 may omit the lateral extensions to accommodate for the narrower width of the upper central teeth compared to molars. The stops 204, 205 can be spaced inward from an edge of the bracket 900, which can be from a gingival or occlusal edge of the bracket 900. The stops 204, 205 may be spaced inward to a greater extent than on the lower anterior teeth.

[0490] FIG. 19 illustrates the bracket 900 that can be attached to any tooth of the patient but may be particularly suited for bicuspids of the patient. The bracket 900 may include later extensions 902, 903, but the later extensions 902, 903 may extend laterally to a lesser extent than for a molar, which can be due to the smaller width of a bicuspid. The stops 204, 205 may be positioned at or proximate the edge of the bracket 900, which can be on the gingival or occlusal edge of the bracket 900. The interproximal loops 103 can extend more horizontally (e.g., in a more mesial-distal direction) proximate the male connector 106.

[0491] As described herein, a treatment plan for a patient can include staged archforms 100. For example, multiple archforms 100 can be used in a staged sequence to move the patient's teeth from maloccluded positions to a planned position. FIGS. 20A–20C illustrate three upper archforms 100 that can be used during a treatment plan. FIG. 20A illustrates an upper initial archform 100a, FIG. 20B illustrates an upper intermediate archform 100b, and FIG. 20C illustrates an upper final archform 100c. In some variants, fewer archforms 100 may be used, which can include one or two. In some variants, more archforms 100 can be used, which can include four, five, six, or more. The treatment plan can begin with installation of the upper initial archform 100a to move teeth. The initial archform 100a can be removed after a duration of time and replaced with the upper intermediate archform 100b. The intermediate archform 100b can be removed after a duration of time and replaced with the upper final archform 100c to move the patient's teeth into a final configuration. The interproximal structures 103 of the archforms 100

can increase in rigidity as a patient progresses through a treatment plan (e.g., the upper final archform 100c can be more rigid than the initial archform 100a). In some variants, this can occur via increasing the width (e.g., dimension 920) of the interproximal structures 103 as a patient progresses through a treatment plan. In some variants, a treatment plan may begin with an intermediate or final archform. In some variants, a treatment plan may end with an initial or intermediate archform.

[0492] In some variants, the male connectors 106 remain the same size and/or shape. In some variants, the orientation of the male connectors 106 may change during treatment. In some variants, the interproximal structures 103 may change between staged archforms 100 of a treatment plan, which can include changing in curvature, width, length, etc. For example, the interproximal structures 103 may become increasingly wider (e.g., wider in the dimension 920) from one stage to the next. For example, the widths (e.g., dimension 920) of the interproximal loops 103 in the upper initial archform 100a can be the smallest of a treatment plan, the upper intermediate archform 100b can include intermediate widths, and the upper final archform 100c can include the largest widths. A staged approach can improve a patient's comfort during treatment—gradually moving the patient's teeth. The interproximal loops 103 in an archform 103 can vary in width (e.g., dimension 920) to change forces applied to adjacent teeth. For example, a greater width can correspond with greater forces. The interproximal loops 103 may be wider in the portion of the archform 100 corresponding to the molar portion of the dental arch due to the greater forces that may be desired for moving molars compared to an anterior tooth.

[0493] FIGS. 21A–21C illustrate lower archforms 100 that can be used in staged succession according to a treatment plan of a patient. The lower archforms 100 can include indicia, such as apertures 912, in male connectors 106, as described herein, to differentiate an upper archform 100 from a lower archform 100. FIG. 21A illustrates a lower initial archform 100a'. FIG. 21B illustrates a lower intermediate archform 100b'. FIG. 21C illustrates a lower final archform 100c'. As described in reference to the upper archforms 100, the lower archforms 100 can include alterations between different stages to apply different forces on a patient's teeth, which can improve a user's comfort during a treatment plan. The interproximal structures 103 can be altered as described herein to impart different forces (e.g., increase in rigidity by increasing the width across dimension 920) on a patient's teeth.

[0494] FIG. 22 illustrates an archform 100 configured for a patient with crowded teeth. As illustrated, the male connectors 106 may not include the arms, described herein, to grip the mesial and distal sides of the retainer 208. Instead, the portions of the interproximal bends 103 proximate the male connectors 106 can extend away from the male connectors 106 in a gingival or occlusal direction such that the portions of the interproximal bends 103 proximate the male connectors 106 can grip the mesial and distal sides of the retainer 208. This can help to prevent sliding between the male connectors 106 and the brackets 900 in the mesial-distal direction and/or assist in installation (e.g., the interproximal bends 103 can hold the male connector 106 onto a bracket 900 as a clinician manipulates a tool to secure the male connector 106 within the bracket 900).

[0495] FIGS. 23A–23G illustrate an end of a tool 1000, which can be referred to as a director or director, that can be used to assist in installing and/or removing a male connector 106. The tool 100 can include an angled surface 1002, which can also be referred to as an inclined surface. The angled surface 1002 can be straight and/or curved. The angled surface 1002 can extend from a free end to a curved portion 1004. The angled surface 1002 and curved portion 1004 can contact (e.g., engage with) the groove 112 disposed on the tab 380 of a male fastener 106 and/or other features to help install the male connector 106 into a bracket 900 and/or remove the male connector 106 from a bracket 900. In some variants, the tool 1000 can include a solid handle. In some variants, the tool 1000 can include a hollow handle. The hollow handle of the tool 1000 can amplify an audible sound (e.g., clicking sound) that can be emitted when the male connector 106 is inserted or removed from within the slot of the bracket (e.g., coupled to the bracket). The emitted sound can indicate to a clinician that the male connector 109 is locked within the bracket 900.

[0496] To install a male connector 106, the male connector 106 can be inserted into the slot 202 of a bracket 900 at an angle (e.g., angled relative to the face 214), as described herein and as illustrated in FIG. 23B. The recess 402 of the male connector 106 can be positioned under the overhang 210 of the retainer 208 such that the periphery of the recess 402 contacts the C spring 256.

[0497] The angled surface 1002 of the tool 100 can face toward the bracket 900 when installing a male connector 106, as shown in FIG. 23B. The curved portion 1004 can be brought into contact with the groove 112. The angled surface 1002 can help guide the groove 112 into the curved portion 1004. The clinician manipulating the tool

100 can apply, by way of the tool 100, a force against groove 112 toward the C spring 256 and the face 214 of the bracket 900. As a result, the C spring 256 can be compressed such that the male connector 106 can be rotated past the stops 204, 205 and toward the face 214 of the bracket 900 until the male connector 106 is positioned within the slot 202 (e.g., parallel with the face 214), as illustrated in FIG. 23D. The clinician can cease applying the force to the male connector 106 by way of the tool 100 such that the C spring 256 applies a force to the male connector 106 in the direction of the stops 204, 205 so that the male connector 106 is pushed against and/or under a portion of the stops 204, 205—locking the male connector 106 within the slot 202 of the bracket 900. The force of the C spring 256 against the male connector 106 can securely retain the male connector 106 within the slot of the bracket 900. In the locked position, one or more portions of the male connector 106 can be positioned within the receiving spaces 374, 375 of the stops 204, 205, which can be behind the overhangs of the stops 204, 205. In the locked position, contact surfaces 910, 911 of the male connector 106 can contact the stops 204, 205, which can include corresponding contact surfaces of the stops 204, 205. In the locked position, the male connector 106 can be placed behind the overhang 210 of the retainer 208. The placement of the male connector 900 within the slot 202 of the bracket 900 in the locked configuration can emit an audible sound (e.g., a clicking sound). As described herein, the tool 1000 can have a hollow handle which can amplify the audible sound. The emitted sound can indicate to a clinician that the male connector 900 is locked within the bracket 900.

[0498] To decouple the male connector 106 from the bracket 900 with the tool 1000, the tool 1000 can be reoriented such that the angled surface 1002 is facing away from the bracket 900, as illustrated in FIGS. 23E and 23F. The tool 1000 can be positioned such that the curved portion 1004 contacts the groove 112 and the angled surface is positioned behind the tab 380 of the male connector 106, as illustrated in FIG. 23F. The clinician manipulating the tool 1000 can apply a force, by way of the tool 1000, to the male connector 106 such that the male connector 106 moves in the direction of the C spring 256. The C spring 256 can be compressed and the male connector 106 moved from behind the extensions (e.g., overhangs) of the stops 204, 205 (e.g., disengage from the stops 204, 205). The clinician can apply a force to the male connector 106 with the tool 1000 away from the bracket 900, which can include applying a force via the angled surface 1002 against the male connector 106. This can rotate the male connector 106 away from the face 214 and out of the slot 202 of the bracket 900, as illustrated in FIG.

23G. In some variants, movement of the tool 1000 toward the C spring 256 can cause the male connector 106 to slide up the angled surface 1002 and rotate out of the slot 202. The removal of the male connector 106 from the locked configuration within the slot 202 of the bracket 900 can emit an audible sound (e.g., a clicking sound) that can indicate to a clinician that the male connector 106 has been removed. The hollow handle of the tool 1000 can amplify the audible sound. The male connector 106 can then be grasped by a tool, such as a hemostat, to remove the male connector 106 from within the slot 202.

[0499] A kit and/or system can include one or more components (e.g., bracket(s), archform(s), tray(s), tool(s), etc.) described herein. For example, in some variants, a kit and/or system can include a plurality of brackets (e.g., molar brackets, lower anterior brackets, bicuspid brackets, and/or upper central brackets), one or more archforms (e.g., an upper initial, lower initial, upper intermediate, lower intermediate, upper final, and/or lower final archform), a tool for handling and/or installing the brackets and/or archforms, a tray (e.g., indirect bonding tray) for positioning the plurality of brackets on teeth of the patient for bonding, and/or an adhesive (e.g., bonding agent) for attaching the plurality of brackets to the teeth of the patient. In some variants, the kit and/or system can include the components to install an orthodontic appliance (e.g., brackets and archform) in the mouth of the patient. The kit, in some variants, can include all the components for a treatment plan, which can at least include those components not readily found at an orthodontic clinic and/or components custom designed for the patient. The kit, in some variants, can include a plurality of archforms to be used in sequence according to a treatment plan to move the patient's teeth from maloccluded positions to planned positions.

[0500] The archforms, brackets, caps, and/or trays described herein can be made via 3D oral scans of a patient's mouth. For example, a 3D scan of the patient's mouth can be taken, enabling an archform, bracket, cap, and/or tray to be designed and manufactured. The archform can be designed to fit the patient's teeth in the shape of the patient's current malocclusion and move the patient's teeth to a second state. In some variants, one archform can change the configuration of the patient's teeth from a maloccluded state to a finished state. In some variants, multiple archforms are used in sequence to move the patient's teeth from a maloccluded stat to a finished state. The 3D scans described herein can be performed using a mobile device of a patient or clinician, such as a smartphone, or computer. In some variants, an application can be used to perform the 3D scans—providing the patient with instructions on how to perform the scan

and when a scan is successful. The scan can be performed using the mobile device's built-in camera or via an attachment that operatively connects to the mobile device or computer. The data from the 3D scan can be used to design and manufacture an archform, bracket, cap, and/or tray. The data from the 3D scan can be uploaded into a data center (i.e., cloud) of the designer and/or manufacturer of archforms, brackets, caps, and/or trays to create a case for the patient.

[0501] The archforms described herein can be cut (e.g., laser, waterjet, etc.) from a sheet of material, such as a shape memory material (e.g., nitinol). The sheet of material can be flat. A 3D scan of a patient's mouth (e.g., teeth, archform) can be taken using one or more of the methods described herein. A virtual setup (e.g., 3D model) of the patient's teeth can be created. The teeth can be digitally reconfigured to a planned configuration. Digital brackets can be disposed on the teeth in the planned configuration. A fixture can be manufactured (e.g., 3D printed, machined, cast, etc.) based on the virtual setup of the teeth in the planned configuration. The fixture can include retention features (e.g., hooks, slots, etc.) disposed at positions corresponding to the positions of the digital brackets in the virtual setup. An archform can be deflected to be disposed on the fixture. For example, connectors (e.g., male connectors, male fasteners, etc.) of the archform can be disposed in the retention features of the fixture, deflecting the archform. The archform can be custom shaped via heat setting (e.g., exposure to heat) such that the deflected configuration of the archform is the default configuration of the archform, which can be activated by the temperature of the archform reaching a transition temperature. Orthodontic brackets, which can include at least those described herein, can be bonded to the teeth of the patient (e.g., at positions corresponding to the positions of the digital brackets in the virtual setup). The custom shaped archform can be deflected to be disposed in the orthodontic brackets. For example, the connectors of the custom shaped archform can be coupled to the orthodontic brackets as described herein. The deflected custom shaped archform can apply one or more forces to the teeth of the patient to move the one or more teeth toward the planned configuration as the custom shaped archform moves back toward the default configuration. As described herein, a treatment plan can incorporate multiple archforms with varying characteristics. For example, a treatment plan can involve sequentially installing multiple archforms in the mouth of the patient. The multiple archforms can increase in rigidity as a patient progresses through a treatment plan. In some variants, the archforms can be custom cut based on the scans of the patient's mouth, which can account for abnormalities such as missing teeth.

[0502] FIG. 24 illustrates an archform 100 with indicia 1300 corresponding to a patient. The indicia 1300 can include letters, numbers, signs, illustrations, marks, and/or other features that correspond to a patient. For example, the indicia 1300 can include a patient ID associated with a patient. The indicia 1300 can be used by systems and/or clinicians to ensure that the correct archform 100 is installed in a patient's mouth. The indicia 1300 can include other information, such as whether the archform is for installation on the upper or lower arch. The indicia 1300 can include computer readable features. The indicia 1300 can be disposed on one or more of the male connectors 106 (e.g., locking connectors). The indicia 1300 can be laser etched, laser engraved, formed into the archform 100, painted on the archform 100, and/or otherwise disposed on the archform 100.

[0503] FIG. 25A illustrates an example method 1100 of manufacturing template archforms and custom shaping said template archforms. Template archforms can be archforms that can be used by a certain percentage (e.g., 20%, 30%, 40%, 50%, 60%, 70%, 80%, or 90%) of a population. By cutting template archforms in mass, the cost of producing the template archforms can dramatically decrease and/or the lead times for providing archforms for a patient's treatment can be reduced. The template archforms can be the same as or similar to the archforms described herein (e.g., 100, 100a, 100b, 100c, 100a', 100b', 100c'). This flow diagram is provided for the purpose of facilitating description of aspects of some embodiments. The diagram does not attempt to illustrate all aspects of the disclosure and should not be considered limiting.

[0504] At block 1102, a template archform can be cut from a sheet of material (e.g., shape memory material). In some variants, numerous template archforms can be cut from the same sheet of material, which can include being cut at the same time. The template archform can be cut by laser-cutting, waterjet cutting, or utilizing other techniques. As described, the template archform can be usable by a percentage of the population to allow for cutting in mass. Several varieties of template archforms (e.g., varying stiffness, interproximal loop lengths, omitting male connector(s) interproximal loop(s), overall lengths, etc.) can be cut to accommodate different groups within a population. Several varieties of template archforms (e.g., varying stiffness, interproximal loop lengths, etc.) can be cut to be used at different stages of a treatment plan (e.g., initial, intermediate, final treatment). For example, a stiffer template archform may be used toward the end of treatment to make the final adjustments to a patient's teeth. As described herein, the sheet of shape memory material from which the archform is cut can

be cold worked (e.g., rolling, drawing, etc.) to facilitate setting a transformation temperature between martensite and austenite for the archform. In some variants, the sheet of shape memory material from which the archform is cut can be heat treated (e.g., heated in an oven) to facilitate setting a transformation temperature between martensite and austenite for the archform. In some variants, the sheet of shape memory material from which the archform is cut can include an additive to facilitate setting a transformation temperature between martensite and austenite for the archform. The shape memory material can be a shape memory polymer and/or a shape memory alloy (e.g., nickel titanium). In some variants, the sheet of shape memory material from which the archform is cut can include a nickel titanium ratio to facilitate setting a transformation temperature between martensite and austenite for the archform. **[0451]** At block 1104, the template archform can be tumbled. The tumbling process can remove burrs and/or sharp edges to improve patient comfort. Template archforms can be tumbled in mass. The template archforms can be stored and ready to be custom configured (e.g., shaped) to treat a patient.

[0505] At block 1106, a scan (e.g., 3D scans) can be taken of the inside of the patient's mouth (e.g., dental arches). The scans can be taken by the patient, caretaker of the patient, and/or clinician. The scan can be performed using a camera and/or sensor of a mobile device, such as a smartphone, or computer. In some variants, an application can be used to perform the scans—providing the patient with instructions on how to perform the scan and when a scan is successful. The scan can be performed using the mobile device's built-in camera or via an attachment that operatively connects to the mobile device or computer. In some variants, the scan(s) can be captured using a digital intra-oral scanner and/or a cone-beam computed tomography (CBCT) X-ray scanner.

[0506] At block 1108, a digital model of the patient's teeth in first positions, based on 3D scans of the inside of the patient's mouth, can be created. The first positions can correspond to the current positions of the patient's teeth which can be maloccluded positions. The digital model can be displayed to an operator for viewing and manipulation. In some variants, the digital model can be automatically generated by software implemented on a computing device based on the 3D scans of the inside of the patient's mouth. The data captured by the scan can be sent to a clinic and/or manufacturer of archforms for use.

[0507] At block 1110, the teeth, e.g., one or more teeth, of the digital model can be moved from the first positions to second positions. The teeth can be moved to the

second positions by the operator. In some variants, the teeth can be automatically moved to the second positions by software implemented on a computing device. The second positions can correspond to a final alignment, intermediate alignment, or other alignment of the teeth.

[0508] At block 1112, digital brackets can be digitally placed on surfaces of the teeth of the digital model. The operator can place the digital brackets on respective surfaces of the teeth of the digital model. In some variants, the operator can select from a variety of types of digital brackets and place a digital bracket from the variety of types on a surface of a tooth of the digital model. In some variants, the digital brackets can be automatically placed on teeth of the digital model by software implemented on a computing device. In some variants, the software implemented on a computing device can automatically select a digital bracket from a variety of types based on the type of tooth (e.g., lower anterior, molars, premolars, etc.) of the digital model upon which the digital bracket will be placed.

[0509] At block 1114, a physical fixture can be manufactured based at least partially on the digital model. The physical fixture can be 3D printed. In some variants, the physical fixture can be machined, cast, and/or otherwise manufactured. The physical fixture can include retention features (e.g., hooks, catches, slots, holders, brackets, grooves, receptacle, retainers, etc.) that can receive at least a portion of the archform. For example, in some variants, the retention features can receive connecters (e.g., male connectors) of the template archform. The retention features can be positioned based on the corresponding positioning of the digital brackets in the digital model with the teeth in the second positions, such that the relative positioning of the retention features to each other is the same as the relative positioning of the digital brackets to each other in the digital model. In some variants, the physical fixture can be a physical model of the patient's teeth corresponding to the digital model of the patient's teeth with the teeth in the second positions and the retention features positioned on the teeth of the physical model based on the corresponding positioning of the digital brackets in the digital model.

[0510] At block 1116, the template archform can be deflected (e.g., deflected from a planar 2D shape) and coupled to the retention features of the physical fixture to hold the template archform in a custom nonplanar shape. In some variants, an operator deflects and couples the archform to the retention features by hand and/or with a tool. In some variants, a machine deflects and couples the archform to the retention features. In some variants, the connectors (e.g., male connectors, bracket connectors) of the template

archform can be received by the retention features of the physical fixture to hold the template archform in the custom nonplanar shape. In some variants, the connectors can be snapped, tied, and/or otherwise locked into the retention features. In some variants, the retention features can include one or more springs that can lock a connector within a retention feature.

[0511] In some variants, the template archform can be selected from a variety of types of template archforms based on the 3D scan and/or clinical assessment of the patient's teeth. For example, a template archform that omits one or more male connectors and/or interproximal loops to accommodate a missing tooth of the patient may be selected. In some variants, a template archform with certain characteristics (e.g., stiffness, interproximal loop lengths, etc.) may be selected from a plurality of different template archforms for a treatment plan for a patient based on the 3D scan data and/or clinical assessment. For example, if the patient's teeth are close to the second positions, a more stiff archform may be selected. Alternatively, if the patient's teeth are not close to the second positions, a less stiff archform may be selected to promote user comfort.

[0512] At block 1118, the template archform, while being held in the custom nonplanar shape by the physical fixture, can be set up in the custom nonplanar shape such that the custom nonplanar shape is the default position or memorized shape of the template archform. In some variants, the template archform can be set up in the custom nonplanar shape by exposing the template archform to heat (e.g., heat treating the archform in an oven). The archform can take on or move to the custom nonplanar shape when in the austenite phase, as described herein. In some variants, the archform can relax from the custom nonplanar shape when in the martensite phase. As described herein, the custom nonplanar shape can correspond with an expected alignment of the patient's teeth, which can be based on a virtual model of the patient's teeth.

[0513] At block 1120, the transition temperature for the archform between martensite and austenite for the archform can be set. The archform can be in a martensite phase when the temperature of the archform is below the transition temperature and in an austenite phase when the temperature of the archform is above the transition temperature. The archform can be heat treated such that the transition temperature for the archform is between 75 and 97 degrees Fahrenheit. In some variants, the archform can be heat treated such that the transition temperature for the archform is between 80 and 90 degrees Fahrenheit. In some variants, the archform can be heat treated such that the transition temperature for the archform is 70, 71, 72, 73, 74, 75, 76, 77, 78, 79, 80, 81, 82, 83, 84,

85, 86, 87, 88, 89, 90, 91, 92, 93, 94, 95, 96, 97, or 98 degrees Fahrenheit or a temperature between any of the foregoing values. The archform can be heat treated such that the archform is in a martensite phase when the temperature of the archform is between 65 and 75 degrees Fahrenheit, which can typically correspond with room temperature. In some variants, the archform can be heat treated such that the archform is in a martensite phase when the temperature of the archform is between 60 and 80 degrees Fahrenheit or any subrange or value therebetween. The archform can be heat treated such that the archform is in an austenite phase when the temperature of the archform is between 97 and 99 degrees Fahrenheit, which can typically correspond with body temperature. In some variants, the archform can be heat treated such that the archform is in an austenite phase when the temperature of the archform is between 90 and 100 degrees Fahrenheit or any subrange or value therebetween. In the martensite phase, the archform can be flexible and/or pliable to facilitate easy installation. In the austenite phase, the archform can be rigid and/or springy (e.g., activated) to exert forces on the patient's teeth after installation. Accordingly, as a clinician handles and installs the archform in a patient's mouth, the archform can be pliable to facilitate easy handling and installation. After installation, the archform can be heated by the patient's mouth to or above the transition temperature such that the archform is in the austenite phase and activated toward the custom nonplanar shape. In the austenite phase, the archform can be rigid and/or springy to exert forces on the patient's teeth to move the patient's teeth. In the austenite phase, the archform can assume the custom nonplanar shape (e.g., the memorized shape), exerting forces on the patient's teeth when coupled (e.g., coupled via brackets) to the patient's teeth. The heat treating of the archform can include heating the archform in an oven. In some variants, the archform can be custom shaped, as described in relation to block 1118, and the transition temperature set, as described in relation to block 1120, at the same time. In some variants, the archform can be custom shaped and the transition temperature set in sequence.

[0514] The template archform(s) set up in the custom nonplanar shape(s) can be installed in the mouth of the patient, as described herein. The template archform can be deflected from the custom nonplanar shape to couple the male connectors thereof with orthodontic brackets disposed on the teeth of the patient, which can correspond to the teeth in the first positions (e.g., maloccluded positions). During installation, the template archform can be in the martensite phase such that the archform is pliable and easy to manipulate to couple to the orthodontic brackets on the patient's teeth. Once installed,

the template archform can be heated to or above the transition temperature by the patient's mouth such that the archform is in the austenite phase and becomes rigid and moves toward the custom nonplanar shape, which can move the teeth of the patient over time toward the second positions. The movement of the teeth can at least include manipulating the facial/lingual inclination of a tooth, moving a tooth in an occlusal or gingival direction, moving a tooth in a buccal-lingual direction, moving a tooth in a mesial-distal direction, rotating a tooth, etc.

[0515] As described herein, a treatment plan can incorporate one or more template archforms (e.g., a series of archforms such as an initial, intermediate, and final archform) that are custom shaped as described herein. In some variants, the stiffness of the template archforms, in the austenite phase, employed can increase as a treatment plan progresses. The stiffness of the template archforms can be changed as described herein, which can include changing the interproximal loops (e.g., adjusting the radius, length, widths, etc.) and/or increasing the width and/or thickness of the archform. In some variants, all of the archforms for a treatment plan can be set up in custom configurations and sent to a clinician or patient for the treatment of a patient.

[0516] FIG. 25B illustrates an example method 1200 of manufacturing and shaping custom archforms. For a certain percentage of the population (e.g., 5%, 10%, 15%, 20%, 25%, 30%, etc.), template archforms may not be a viable treatment option, which can be due to a variety of reasons. For example, a template archform may be designed for a patient with a full set of teeth. Accordingly, a patient that is missing one or more teeth may utilize a custom cut and shaped archform to accommodate for the missing one or more teeth. The custom cut archforms can be the same as or similar to the archforms described herein (e.g., 100, 100a, 100b, 100c, 100a', 100b', 100c'). For a patient missing one or more teeth, the custom archform may omit one or more male connectors and/or interproximal loops, which may be replaced by a straight segment following the dental arch (e.g., extending along a longitudinal axis of the archform). This flow diagram is provided for the purpose of facilitating description of aspects of some embodiments. The diagram does not attempt to illustrate all aspects of the disclosure and should not be considered limiting.

[0517] At block 1202, a scan (e.g., 3D scans) can be taken of the inside of the patient's mouth (e.g., dental arches) as described in reference to method 1100. The data from the scans can be sent to a clinic and/or manufacturer of archforms.

[0518] At block 1204, a digital model of the patient's teeth in first positions, based on 3D scans of the inside of the patient's mouth, can be created as described in reference to method 1100.

[0519] At block 1206, a custom archform can be designed (e.g., a planar archform) based on the digital model of the patient's teeth and/or the data from the 3D scan(s). The custom archform can be designed to accommodate the particularities of a patient's dental arches (e.g., if a patient is missing one or more teeth). For example, a male connector and/or interproximal loop may be omitted, an interproximal loop may be altered, the thickness and/or width of the archform may be changed, and/or other alterations. The custom archform may include areas of increased or reduced width. The custom archform may include interproximal loops with different curvatures, lengths, etc.

[0520] At block 1208, the custom archform(s) can be cut as described in reference to method 1100. However, in contrast to method 1100, the custom archform(s) can be custom cut for the patient based on the custom design referenced at block 1206. For example, if a patient is missing a tooth, one or more male connectors and/or interproximal loops may be omitted or altered.

[0521] At block 1210, the custom archform(s) can be tumbled as described in reference to method 1100. At block 1212, the teeth, e.g., one or more teeth, of the digital model can be moved from the first positions to second positions as described in reference to method 1100. At block 1214, digital brackets can be digitally placed on surfaces of the teeth of the digital model as described in reference to method 1100. At block 1216, a physical fixture can be manufactured based at least partially on the digital model and/or scans as described in reference to method 1100. At block 1218, the template archform can be deflected (e.g., deflected from a planar 2D shape) and coupled to the retention features of the physical fixture to hold the template archform in a custom nonplanar shape as described in reference to method 1100. At block 1220, the template archform, while being held in the custom nonplanar shape by the physical fixture, can be set up in the custom nonplanar shape such that the custom nonplanar shape is the default position of the template archform as described in reference to method 1100.

[0522] At block 1222, the transition temperature between martensite and austenite for the archform can be set as described in reference to method 1100.

[0523] The custom archform(s) set up in the custom configuration(s) can be installed in the mouth of the patient accordingly to a treatment plan, as described herein.

The treatment plan may include installing a series of custom archforms and/or template archforms placed in a custom configuration in sequence.

[0524] FIG. 26 illustrates the archform 100. The buccal and lingual surfaces of the archform 100 can be parallel, which can include substantially parallel, relative to each other. The parallel buccal and lingual surfaces of the archform 100 can facilitate torque control of the teeth of the patient by the archform 100. With the archform 100 coupled to brackets bonded to the patient's teeth, the parallel buccal and lingual surfaces can contact surfaces of the brackets to prevent rotational sliding of the archform 100 within the brackets about the longitudinal axis LA of the archform 100, facilitating torque control of the teeth by the archform 100. Without such torque control, the anterior teeth of the patient may flare during the unraveling process of the teeth, which can occur with an archwire with a circular cross-section. The bracket connectors 106 can include parallel buccal and lingual surfaces that facilitate torque control. In some variants, the bracket connectors 106 can include parallel buccal and lingual surfaces to facilitate torque control while the interproximal segments 103 (e.g., interproximal loops) can include a circular or round cross-section. In some variants, the archform 100 can be cut from a flat sheet of material. In some variants, the archform 100 can have a rectangular and/or square cross-section.

[0525] The bracket connectors 106 can include portions that extend in the occlusal-gingival direction away from the longitudinal axis LA of the archform 100. The portions that extend in the occlusal-gingival direction can facilitate increased torque control of the teeth of the patient. The bracket connector 106 can include a portion that extends in the occlusal direction away from the longitudinal axis LA and/or another portion that extends in the gingival direction away from the longitudinal axis LA. The portions of the bracket connectors 106 that extend away from the longitudinal axis LA can provide increased lever arms relative to the longitudinal axis LA for increased torque control. The portions of the bracket connectors 106 that extend away from the longitudinal axis LA can contact surfaces of the brackets to provide torque control of the teeth. At least the handle 380 (e.g., tab, tongue) of the bracket connector 106 can extend in the occlusal direction away from the longitudinal axis LA and at least the arm(s) 612 can extend in the gingival direction away from the longitudinal axis LA. The archform 100 can be custom shaped as described herein. The archform 100 can be heat treated as described in reference to method 1100 to set a transition temperature of the archform 100 between martensite and austenite.

[0526] FIG. 27A illustrates an archform 2000 (e.g., orthodontic archwire). The archform 2000 can have varying cross-sections, which can at least include circular, oval, polygonal (square, rectangular, etc.), irregular, and/or others. The archform 2000 can include bracket connectors 2004 that can be coupled to orthodontic brackets such that the bracket connectors 2004 do not slide with respect to the orthodontic brackets. The bracket connectors 2004 can be loops that extend occlusally relative to a longitudinal axis of the archform 2000. The archform 2000 can include interproximal loops 2002. The interproximal loops 2002 can be disposed between adjacent bracket connectors 2004. The interproximal loops 2002 can extend gingivally relative to a longitudinal axis of the archform 2000, which can facilitate flossing and/or hide the interproximal loops 2002 from view. When the archform 2000 is installed in a patient's mouth, the interproximal loops 2002 can exert forces on the teeth of the patient to move the patient's teeth using nonsliding mechanics. FIG. 27B illustrates an archform 2001 similar to the archform 2000 but with the bracket connectors 2004 extending in the same direction as the interproximal loops 2002 (e.g., gingivally relative to the longitudinal axis of the archform 2001). The archforms 2000, 2001 can be heat treated as described in reference to method 1100 to set a transition temperature of the archforms 2000, 2001.

[0527] As described herein, the disclosed archforms can be formed with a variety of materials, which can include shape memory materials or alloys that can be superelastic materials. Shape memory allows can undergo a phase transformation when temperature and/or strain are applied to the material. With nickel titanium (e.g., Nitinol, superelastic nickel titanium), the phase transformation is between martensite and austenite. In the martensite phase, nickel titanium is pliable and easily bent, and in the austenite phase, nickel titanium is superelastic and more stiff and springy. There is a transformation temperature associated with the phase transformation between martensite and austenite, and the transformation temperature can be controlled through cold working (e.g., rolling and drawing) and/or heat treating. Above the transformation temperature, nickel titanium is in the austenite phase, but below the transformation temperature, nickel titanium is in the martensite phase.

[0528] The sheets of material (e.g., nickel titanium) from which the archforms disclosed herein are cut can be cold worked and/or heat treated such that the archforms cut therefrom, after being set up through a heat treatment to the custom nonplanar shape, have a transformation temperature. In some variants, the sheets of material (e.g., nickel titanium) from which the archforms disclosed herein are cut can be cold worked to

facilitate setting a specific transformation temperature. The archform, once cut, can be set in a custom nonplanar shape and heat treated to set the transformation temperature. In some variants, multiple archforms can be heat treated together (e.g., heated in an oven) to set the transformation temperature in mass. For example, the archforms in the custom nonplanar shape can have a transformation temperature set such that the material is in the martensite phase when the temperature of the archform is between 65 and 75 degrees Fahrenheit, which can correspond with room temperature, and austenite phase when the temperature of the archform is between 97 and 99 degrees Fahrenheit, which can correspond with body temperature. This can enable an archform to be in the martensite phase and pliable as the archform is installed in a patient's mouth (e.g., coupled to brackets disposed on the patient's teeth), but once the patient's mouth warms the archform above the transformation temperature, the archform can be in the austenite phase and activate, e.g., spring, toward the memorized custom nonplanar shape, which can move the patient's teeth toward an alignment (e.g., the second positions, which can be a final alignment).

[0529] The sheets of material (e.g., nickel titanium) from which the archforms disclosed herein are cut can be cold worked and heat treated such that the archforms cut therefrom, after being set up through a heat treatment to the custom nonplanar shape, have a desirable transformation temperature. For example, the archforms in the custom nonplanar shape can have a transformation temperature such that the material is in the martensite phase at room temperature (e.g., 65–75 degrees Fahrenheit) and austenite phase at body temperature (e.g., 97–99 degrees Fahrenheit). This can enable an archform to be in the martensite phase and malleable as it is installed in a patient's mouth (e.g., coupled to brackets disposed on the patient's teeth), but once the patient's mouth warms the archform above the transformation temperature, the archform can be in the austentite phase and activate, e.g., spring, toward the memorized custom nonplanar shape, which can move the patient's teeth toward an alignment (e.g., the second positions, which can be a final alignment).

[0530] In some variants, the archforms herein can be subject to different heat treatments, which can result in different stiffness and/or elasticity. Accordingly, archforms of the same geometry can be subject to different heat treatments, resulting in one or more different properties such as stiffness. For example, in some variants, a first archform can be heat treated, resulting in a stiffness. A second archform, with the same geometry as the first archform, can be heat treated differently than the first, resulting in a

different stiffness than the first archform. In some variants, a plurality of archforms having the same geometry can be heat treated differently, resulting in varying stiffnesses. Accordingly, as described herein, the plurality of archforms can be used sequentially, according to a treatment plan, to move the patient's teeth.

[0531] It is intended that the scope of this present invention herein disclosed should not be limited by the particular disclosed embodiments described above. This invention is susceptible to various modifications and alternative forms, and specific examples have been shown in the drawings and are herein described in detail. This invention is not limited to the detailed forms or methods disclosed, but rather covers all equivalents, modifications, and alternatives falling within the scope and spirit of the various embodiments described and the appended claims. Various features of the orthodontic brackets and archforms described herein can be combined to form further embodiments, which are part of this disclosure. The orthodontic brackets described herein can be bonded to a patient's teeth and the archforms described herein can be deflected and coupled thereto as part of a treatment plan. The archforms can move toward a default position and move the patient's teeth from a first position to a second position. The archforms described herein can be installed in sequence to move the patient's teeth. The orthodontic brackets described herein can be bonded to the teeth of the patient in various orientations, which can include orienting the orthodontic bracket in a first gingival-occlusal orientation and reorienting the orthodontic bracket one hundred and eighty degrees to a second gingival-occlusal orientation (e.g., rotating the orthodontic bracket one hundred and eighty degrees).

[0532] Methods of using the orthodontic brackets and/or archforms (including device(s), apparatus(es), assembly(ies), structure(s) or the like) are included herein; the methods of use can include using or assembling any one or more of the features disclosed herein to achieve functions and/or features of the system(s) as discussed in this disclosure. Methods of manufacturing the foregoing system(s) are included; the methods of manufacture can include providing, making, connecting, assembling, and/or installing any one or more of the features of the system(s) disclosed herein to achieve functions and/or features of the system(s) as discussed in this disclosure.

[0533] Various other modifications, adaptations, and alternative designs are of course possible in light of the above teachings. Therefore, it should be understood at this time that within the scope of the appended claims the invention may be practiced otherwise than as specifically described herein. It is contemplated that various

combinations or subcombinations of the specific features and aspects of the embodiments disclosed above may be made and still fall within one or more of the inventions. Further, the disclosure herein of any particular feature, aspect, method, property, characteristic, quality, attribute, element, or the like in connection with an embodiment can be used in all other embodiments set forth herein. Accordingly, it should be understood that various features and aspects of the disclosed embodiments can be combined with or substituted for one another in order to form varying modes of the disclosed inventions. Thus, it is intended that the scope of the present inventions herein disclosed should not be limited by the particular disclosed embodiments described above. Moreover, while the invention is susceptible to various modifications, and alternative forms, specific examples thereof have been shown in the drawings and are herein described in detail. It should be understood, however, that the invention is not to be limited to the particular forms or methods disclosed, but to the contrary, the invention is to cover all modifications, equivalents, and alternatives falling within the spirit and scope of the various embodiments described and the appended claims. Any methods disclosed herein need not be performed in the order recited. The methods disclosed herein include certain actions taken by a practitioner; however, they can also include any third-party instruction of those actions, either expressly or by implication. For example, actions such as "tying a tie onto an orthodontic bracket" includes "instructing the tying of a tie onto an orthodontic bracket." The ranges disclosed herein also encompass any and all overlap, sub-ranges, and combinations thereof. Language such as "up to," "at least," "greater than," "less than," "between," and the like includes the number recited. Numbers preceded by a term such as "approximately", "about", and "substantially" as used herein include the recited numbers (e.g., about 10% = 10%), and also represent an amount close to the stated amount that still performs a desired function or achieves a desired result. For example, the terms "approximately", "about", and "substantially" may refer to an amount that is within less than 10% of, within less than 5% of, within less than 1% of, within less than 0.1% of, and within less than 0.01% of the stated amount.

WHAT IS CLAIMED IS:

1. A method of forming a custom nonplanar archform, the method comprising:

cutting a template archform from a sheet of material, the template archform configured to be suitable for use in treatment plans for a percentage of a population;

receiving scan data of teeth inside of a patient's mouth;

creating a digital model of the teeth in first positions;

digitally moving the teeth in the digital model from first positions to second positions;

digitally positioning digital brackets on surfaces of the teeth in the digital model;

creating a physical fixture, based at least partially on the digital model, with retention features positioned based on the corresponding positioning of the digital brackets in the digital model;

deflecting the template archform to couple to the retention features of the physical fixture to hold the template archform in a custom nonplanar shape; and

setting the template archform in the custom nonplanar shape.

2. The method of 1, wherein the physical fixture is a physical model of the patient's teeth.

3. The method of Claim 1 or 2, wherein the physical fixture is 3D printed.

4. The method of any of Claims 1–3, wherein the scan data is received from a patient's portable electronic device, the scan data being taken using the patient's portable electronic device.

5. The method of any of Claims 1–3, wherein the scan data is received from a clinic.

6. The method of any of Claims 1–5, further comprising tumbling the template archform to reduce sharp edges.

7. The method of any of Claims 1–6, wherein the template archform comprises one or more characteristics of any of the archforms described herein.

8. The method of any of Claims 1–7, further comprising cutting a plurality of template archforms from the sheet of material.

9. The method of any of Claims 7–8, wherein cutting the template archform comprises laser or waterjet cutting.

10. The method of any of Claims 1-9, wherein the sheet of material is a shape memory material.

11. The method of any of Claims 1-10, wherein the sheet of material is nickel titanium

12. The method of any of Claims 1-11, further comprising cold working and heat treating the sheet of material such that the template archform, after being set in the custom nonplanar shape, is in a martensite phase at room temperature and austenite phase at body temperature.

13. The method of any of Claims 1-11, further comprising heat treating the template archform to set a transition temperature such that the template archform is in a martensite phase at room temperature and austenite phase at body temperature.

14. A method of forming a custom nonplanar archform, the method comprising:

receiving scan data of teeth inside of a patient's mouth;

selecting a template archform from a plurality of template archforms based on the received scan data, the plurality of template archforms configured to be suitable for use in treatment plans for a percentage of a population;

creating a digital model of the teeth in first positions;

digitally moving the teeth in the digital model from first positions to second positions;

digitally positioning digital brackets on surfaces of the teeth in the digital model;

creating a physical fixture, based at least partially on the digital model, with retention features positioned based on the corresponding positioning of the digital brackets in the digital model;

deflecting the template archform to couple to the retention features of the physical fixture to hold the template archform in a custom nonplanar shape; and

setting the template archform in the custom nonplanar shape.

15. The method of Claim 14, further comprising any of the limitations of Claims 1–13.

16. A method of forming a custom nonplanar archform, the method comprising:

receiving scan data of teeth inside of a patient's mouth;

cutting a custom archform from a sheet of material based on the scan data;

creating a digital model of the teeth in first positions;

digitally moving the teeth in the digital model from first positions to second positions;

digitally positioning digital brackets on surfaces of the teeth in the digital model;

creating a physical fixture, based at least partially on the digital model, with retention features positioned based on the corresponding positioning of the digital brackets in the digital model;

deflecting the custom archform to couple to the retention features of the physical fixture to hold the custom archform in a custom nonplanar shape; and

setting the custom archform in the custom nonplanar shape.

17. The method of Claim 16, wherein the physical fixture is a physical model of the patient's teeth.

18. The method of Claims 16 or 17, wherein the physical fixture is 3D printed.

19. The method of any of Claims 16–18, wherein the scan data is received from a patient's portable electronic device, the scan data being taken using the patient's portable electronic device.

20. The method of any of Claims 16–19, wherein the scan data is received from a clinic.

21. The method of any of Claims 16–20, further comprising tumbling the custom archform to reduce sharp edges.

22. The method of any of Claims 16–21, further comprising cutting a plurality of custom archforms from the sheet of material.

23. The method of any of Claims 16–22, wherein cutting the custom archform comprises laser or waterjet cutting.

24. The method of any of Claims 16–23, wherein the sheet of material is a shape memory material.

25. The method of any of Claims 16–24, wherein the sheet of material is nickel titanium

26. The method of any of Claims 16–25, further comprising cold working and heat treating the sheet of material such that the custom archform, after being set in the custom nonplanar shape, is in a martensite phase at room temperature and austenite phase at body temperature.

27. The method of any of Claims 16-25, further comprising heat treating the custom archform to set a transition temperature such that the custom archform is in a martensite phase at room temperature and austenite phase at body temperature.

28. An archform configured to follow at least a portion of a dental arch of a patient, the archform comprising:

a longitudinal axis;

a plurality of bracket connectors, each of the bracket connectors comprising:

a buccal surface and a lingual surface, the buccal surface and the lingual surface parallel to each other; and

a portion extending in an occlusal direction or gingival direction away from the longitudinal axis;

a plurality of interproximal segments, each of the interproximal segments disposed between a pair of bracket connectors of the plurality of bracket connectors;

wherein the plurality of bracket connectors are configured to couple with corresponding brackets bonded to teeth of the patient such that the plurality of bracket connectors do not slide rotatably about the longitudinal axis relative to the brackets to facilitate torque control of the teeth of the patient.

29. The archform of Claim 28, wherein the archform comprises a custom memorized shape corresponding to a 3D virtual setup of teeth of the patient and the archform being configured to be deflected from the custom memorized shape to couple to the brackets, resulting in forces being exerted on the teeth of the patient to move the teeth from an initial configuration toward a configuration corresponding to the 3D virtual setup.

30. The archform of Claims 28 or 29, wherein the plurality of interproximal segments comprise interproximal loops.

31. The archform of any of Claims 28–30, wherein the portion is a tab.

32. The archform of any of Claims 28–31, wherein the portion is one or more arms.

33. The archform of any of Claims 28–32, wherein the archform comprises a transition temperature such that the template archform is in a martensite phase at room temperature and austenite phase at body temperature.

34. An archform configured to move teeth of a patient, the archform comprising a first phase when a temperature of the archform is at room temperature and a second phase when the temperature of the archform is at body temperature.

35. The archform of Claim 34, wherein the first phase is martensite.

36. The archform of any of Claims 34 or 35, wherein the second phase is austenite.

37. The archform of any of Claims 34–36, wherein the archform is pliable in the first phase.

38. The archform of any of Claims 34–37, wherein the archform is rigid in the second phase.

39. The archform of any of Claims 34–38 wherein the archform is springy in the second phase.

40. The archform of any of Claims 34–39, wherein body temperature is between 97 and 99 degrees Fahrenheit.

41. The archform of any of Claims 34–40, wherein room temperature is between 65 and 75 degrees Fahrenheit.

42. The archform of any of Claims 34–41, wherein the archform comprises bracket connectors configured to be coupled, respectively, to orthodontic brackets disposed on the patient's teeth such that the bracket connectors do not slide with respect to the orthodontic brackets.

43. The archform of Claim 42, wherein the archform comprises interproximal loops, each interproximal loop disposed between adjacent bracket connectors.

44. The archform of any of Claims 34–43, further comprising nickel titanium.

45. The archform of any of Claims 34–44, further comprising a buccal surface and a lingual surface, the buccal and lingual surfaces being parallel to each other.

46. The archform of any of Claims 34–44, further comprising a circular cross-section.

47. The archform of any of Claims 34–46, wherein the archform is configured to be coupled to brackets disposed on lingual surfaces of the patient's teeth.

48. The archform of any of Claims 34–47, wherein the archform comprises a custom nonplanar shape in the second phase.

49. The archform of Claim 48, wherein the custom nonplanar shape corresponds to an alignment of the patient's teeth.

50. An archform configured to move teeth of a patient, the archform comprising a transition temperature such that the archform is in a first phase below the transition temperature and a second phase above the transition temperature.

51. The archform of Claim 50, wherein the transition temperature is between 75 and 97 degrees Fahrenheit.

52. The archform of Claim 50, wherein the transition temperature is between 80 and 90 degrees Fahrenheit.

53. The archform of any of Claims 50–52, wherein the first phase is martensite.

54. The archform of any of Claims 50–53, wherein the second phase is austenite.

55. The archform of any of Claims 50–54, wherein the archform is pliable in the first phase.

56. The archform of any of Claims 50–55, wherein the archform is rigid in the second phase.

57. The archform of any of Claims 50–56, wherein the archform is springy in the second phase.

58. The archform of any of Claims 50–57, wherein the archform is in the first phase when the temperature of the archform is at room temperature.

59. The archform of Claim 58, wherein room temperature is between 65 and 75 degrees Fahrenheit.

60. The archform of any of Claims 50–59, wherein the archform is in the second phase when the temperature of the archform is at body temperature.

61. The archform of Claim 60, wherein body temperature is between 65 and 75 degrees Fahrenheit.

62. The archform of any of Claims 50–61, wherein the archform comprises a custom nonplanar shape in the second phase.

63. The archform of Claim 62, wherein the custom nonplanar shape corresponds to an alignment of the patient's teeth.

64. The archform of any of Claims 50–63, further comprising any of the limitations of Claims 34–49.

65. An archform configured to move teeth of a patient, the archform being in a martensite phase when a temperature of the archform is between 65 and 75 degrees

Fahrenheit and an austenite phase when the temperature of the archform is between 97 and 99 degrees Fahrenheit.

66. The archform of Claim 65, wherein between 65 and 75 degrees Fahrenheit corresponds with room temperature.

67. The archform of any of Claims 65 or 66, wherein between 97 and 99 degrees Fahrenheit corresponds with body temperature.

68. The archform of Claim 65, further comprising any of the limitations of Claims 34–64.

69. An archform configured to move teeth of a patient, the archform comprising a transition temperature between 75 and 97 degrees Fahrenheit such that the archform is in a martensite phase when a temperature of the archform is below the transition temperature and an austenite phase when the temperature of the archform is above the transition temperature.

70. The archform of Claim 69, further comprising any of the limitations of Claims 34–68.

71. A method of forming an archform to move teeth of a patient, the method comprising heat treating the archform such that the archform is in a martensite phase when a temperature of the archform is between 65 and 75 degrees Fahrenheit and an austenite phase when the temperature of the archform is between 97 and 99 degrees Fahrenheit.

72. The method of Claim 71, wherein the archform is pliable in the martensite phase and rigid in the austenite phase.

73. The method of any of Claims 71 or 72, wherein between 65 and 75 degrees Fahrenheit corresponds with room temperature.

74. The method of any of Claims 71–73, wherein between 97 and 99 degrees Fahrenheit corresponds with body temperature.

75. The method of any of Claims 71–74, wherein the archform comprises nickel titanium.

76. The method of any of Claims 71–75, further comprising forming bracket connectors and interproximal loops, wherein the interproximal loops are disposed between adjacent bracket connectors.

77. The method of any of Claim 76, wherein the forming bracket connectors and interproximal loops comprising cutting the archform from a sheet of material.

78. The method of any of Claims 71–77, further comprising custom shaping the archform to have a nonplanar shape corresponding to an expected alignment of a patient's teeth based on a digital model of the patient's teeth.

79. The method of any of Claims 71–78, wherein heat treating the archform comprises heating the archform in an oven.

80. A method of forming an archform to move teeth of a patient, the method comprising heat treating the archform to set a transition temperature of the archform such that the archform is in a martensite phase below the transition temperature and an austenite phase above the transition temperature.

81. The method of Claim 80, wherein the transition temperature is between 75 and 97 degrees Fahrenheit.

82. The method of Claim 80, wherein the transition temperature is between 80 and 90 degrees Fahrenheit.

83. The method of any of Claims 80–82, further comprising any of the limitations of any of Claims 71–79.

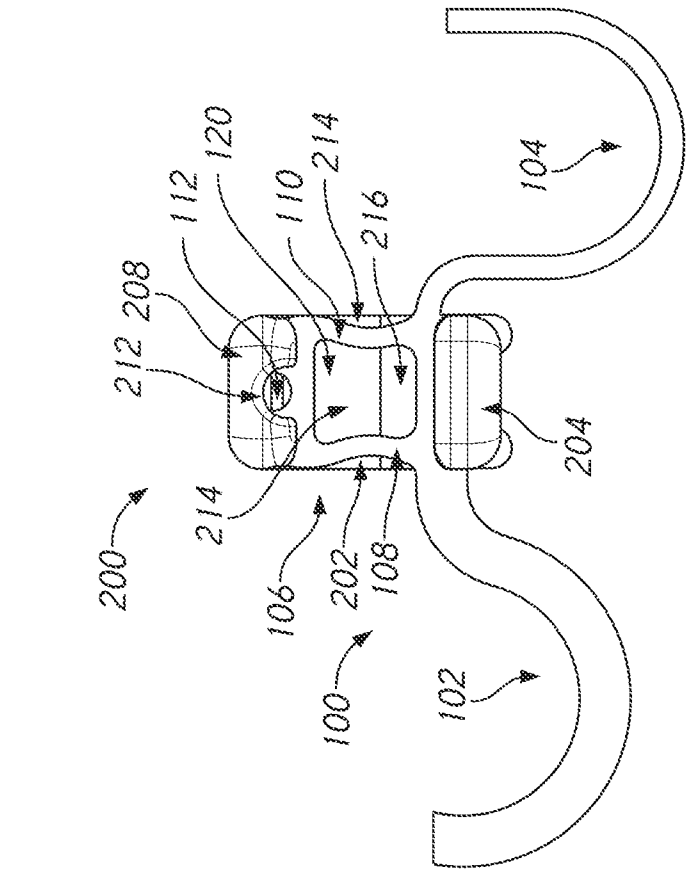
120
112
110
214
216
104
208
212
204
200
214
106
202
108
100
102

FIG. 1B

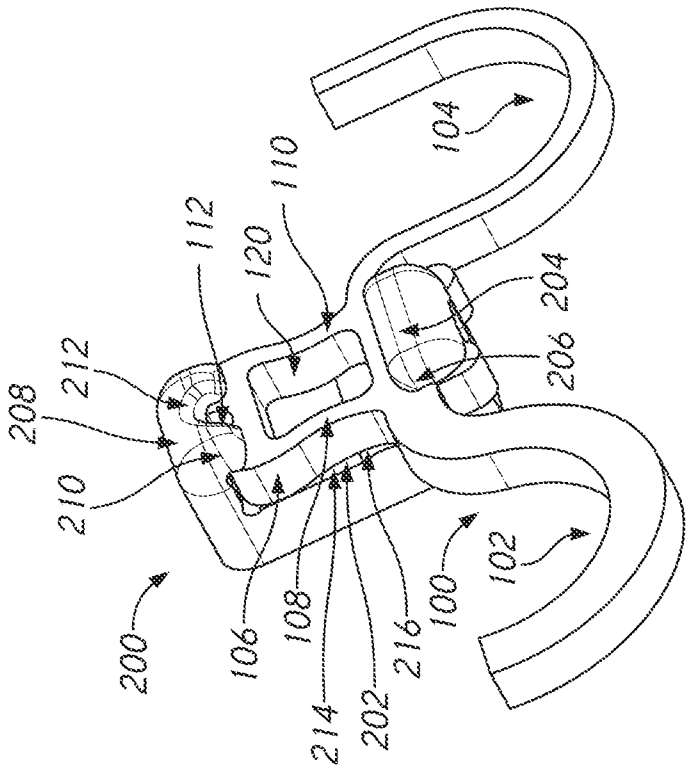
104
110
112
120
204
208
212
206
210
200
106
108
214
202
216
100
102

FIG. 1A

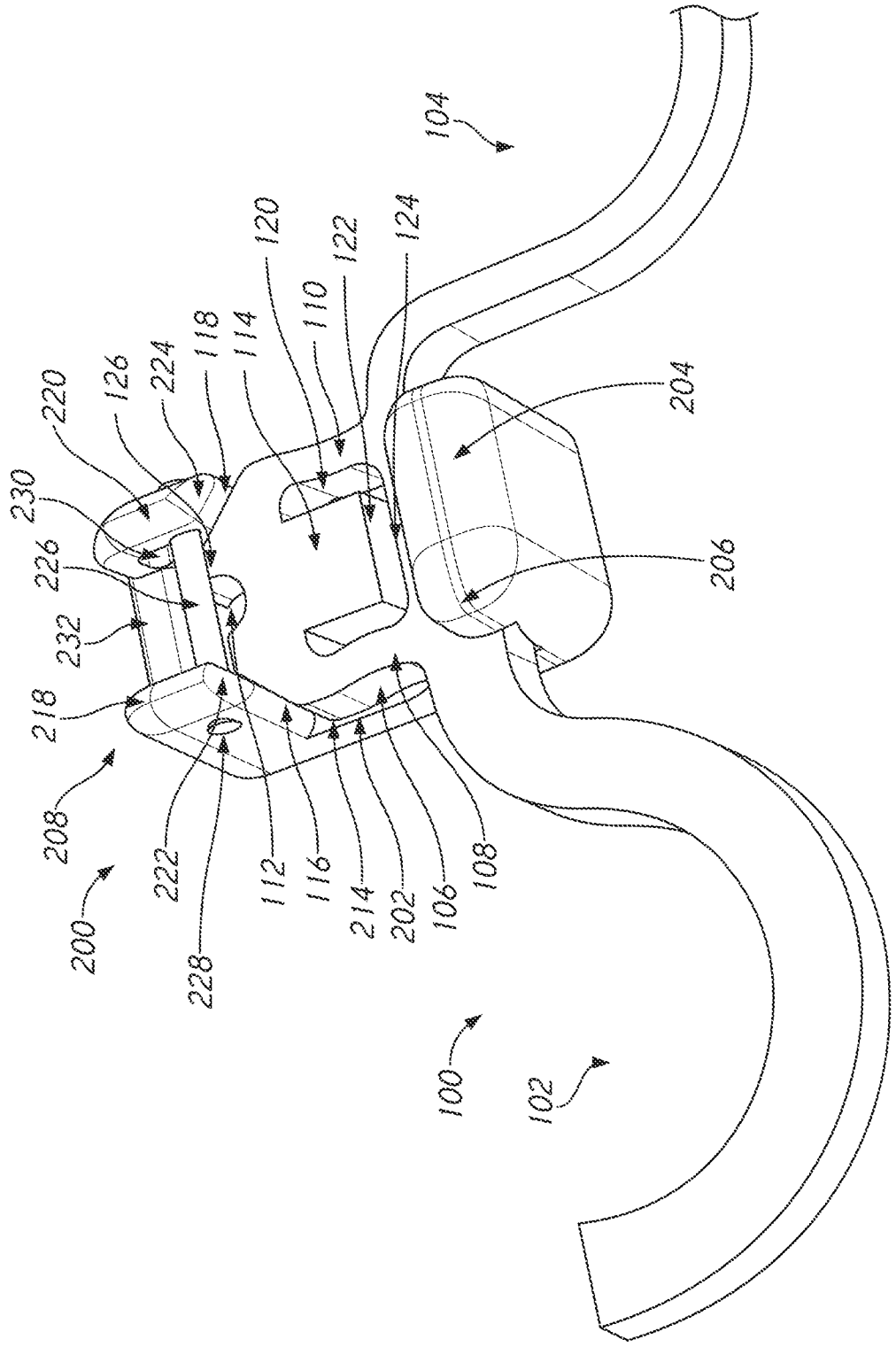
104
120
122
124
110
118
114
224
126
220
230
226
232
218
208
200
228
222
112
116
214
202
106
108
204
206
100
102

FIG. 2A

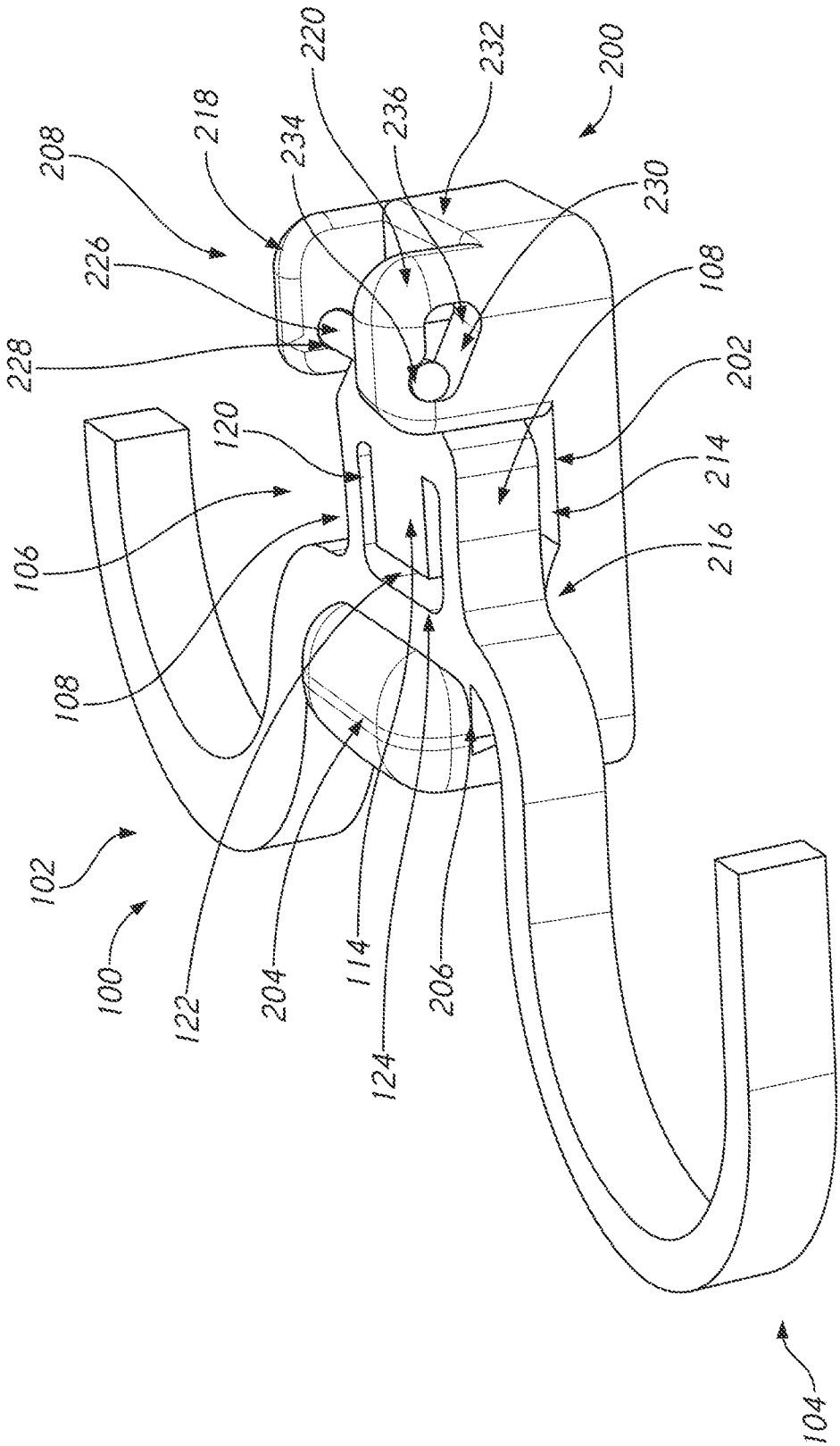
200
208
218
220
232
234
236
230
226
228
108
202
120
214
106
216
108
102
100
122
204
114
206
124
104

FIG. 2B

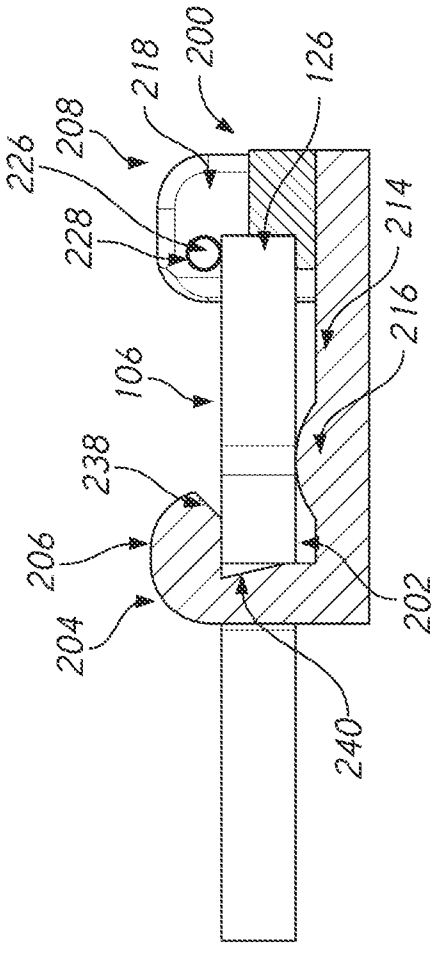
200
218
126
226
208
228
214
216
106
238
206
204
202
240

FIG. 2C

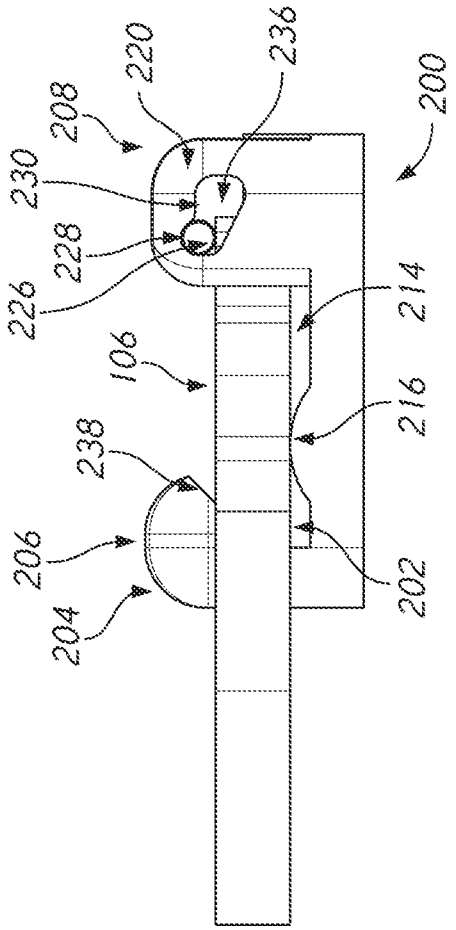
200
220
236
208
230
228
226
214
106
216
238
206
204
202

FIG. 2D

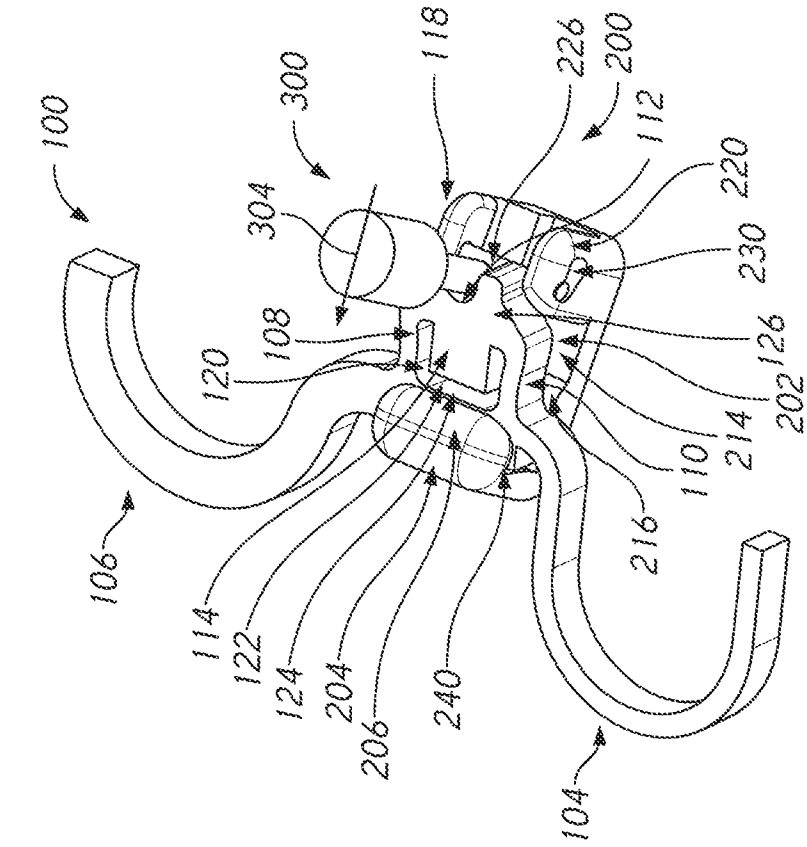
100
106
114
122
124
204
206
240
104
120
108
304
300
118
226
200
112
220
230
126
202
214
110
216

FIG. 2F

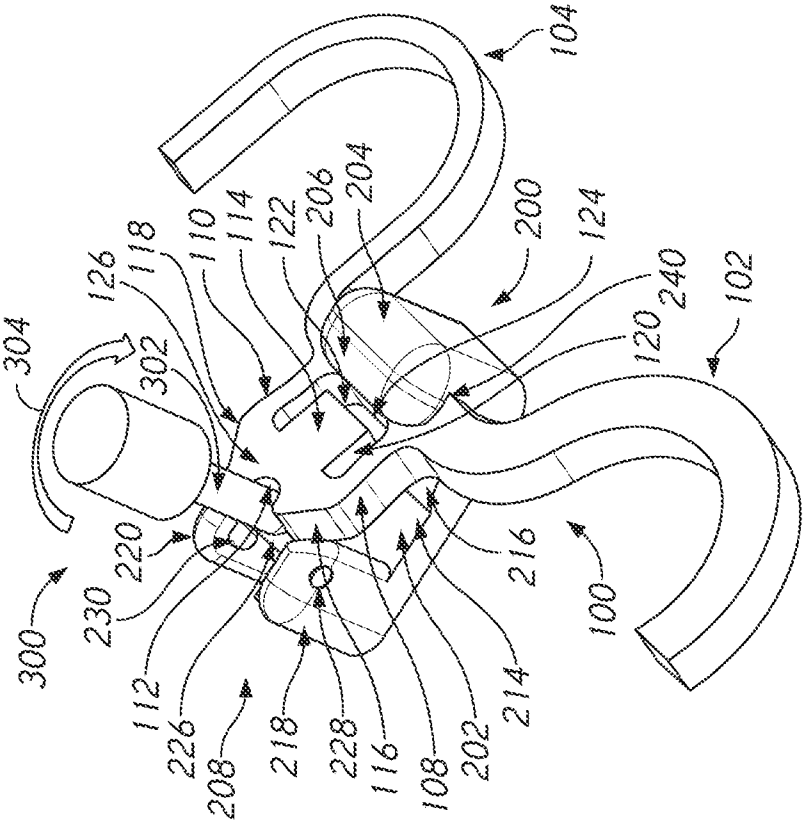
304
302
126
118
110
114
122
206
204
200
124
240
102
120
104
300
230
220
112
226
208
218
228
116
108
202
214
216
100

FIG. 2E

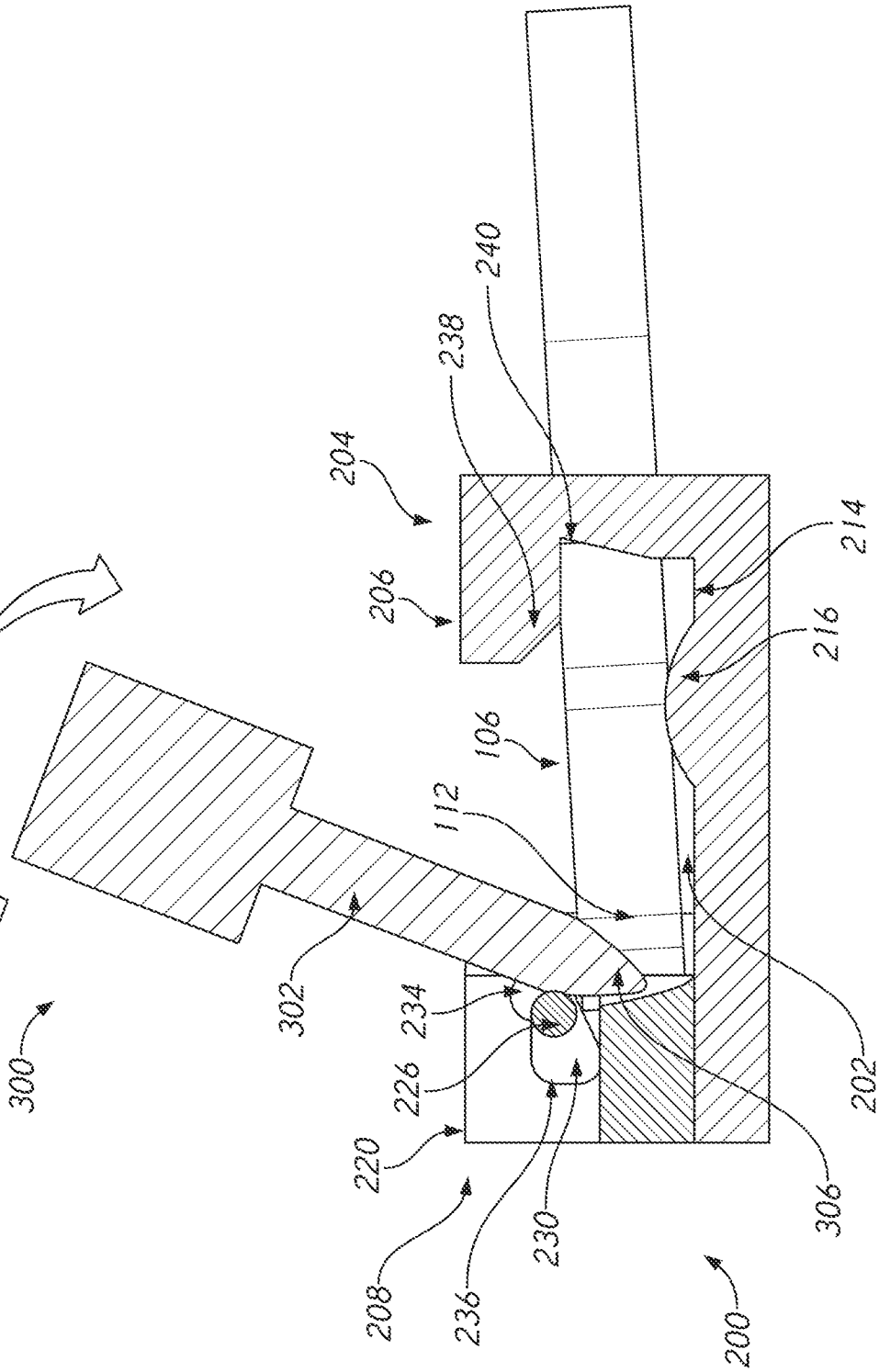
240
238
204
214
206
216
304
106
112
302
234
202
300
226
220
306
208
230
236
200

FIG. 2G

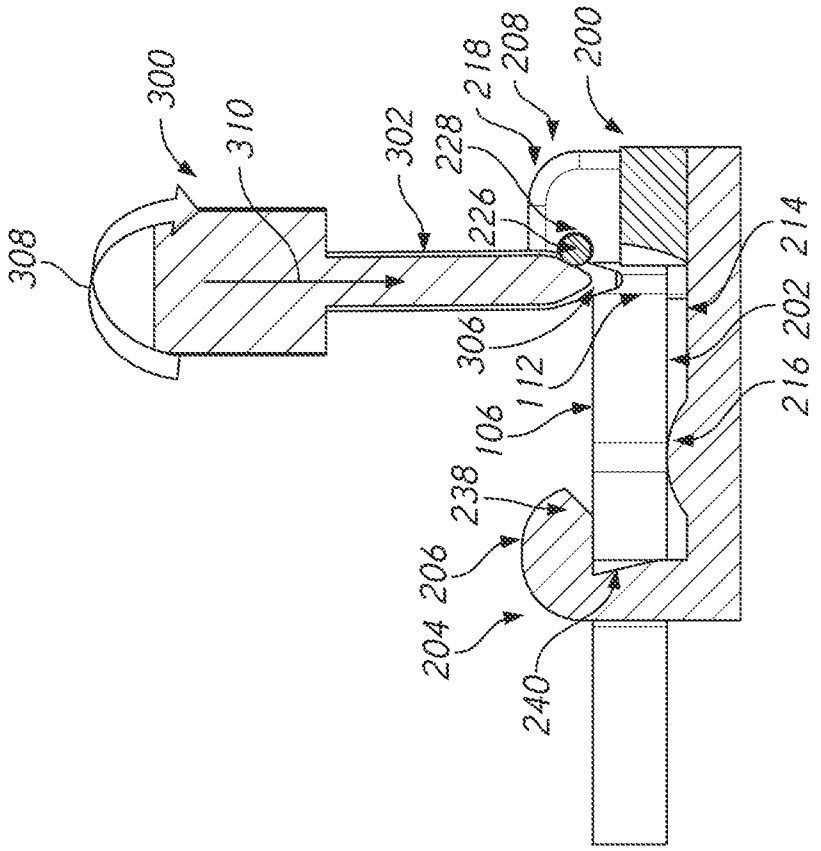
300
310
308
302
228
218
208
200
226
214
306
112
202
216
106
238
206
204
240

FIG. 2I

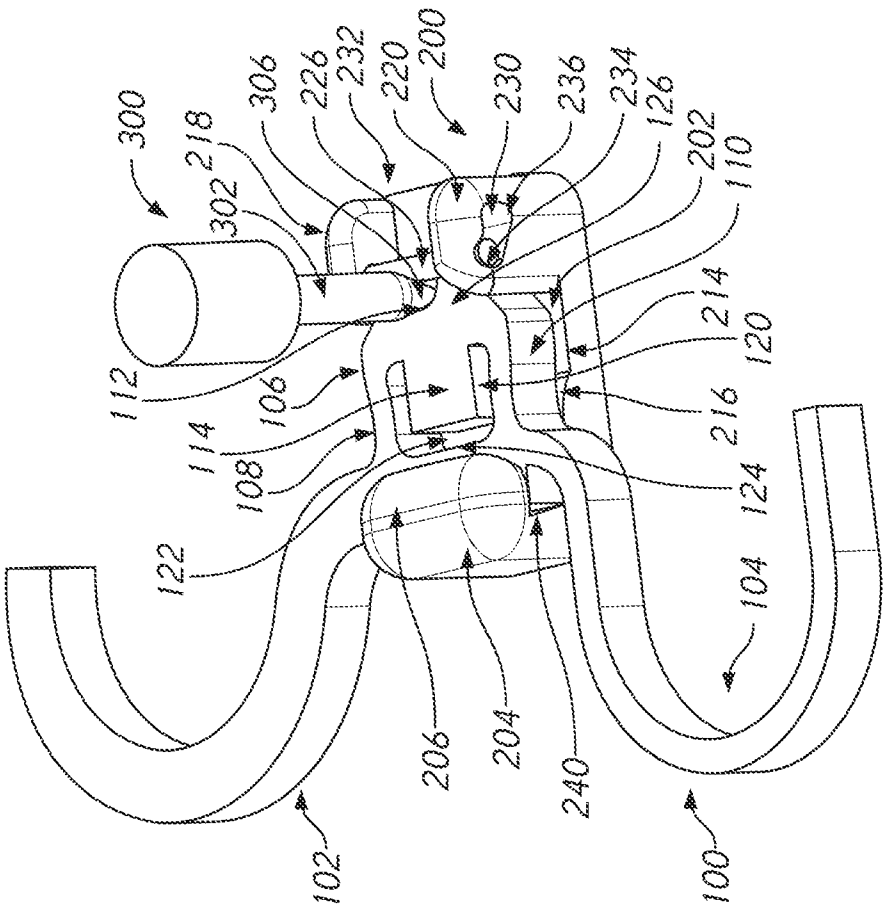
300
218
302
306
226
232
220
200
230
236
234
126
202
110
214
120
112
106
114
108
216
124
122
104
206
204
240
102
100

FIG. 2H

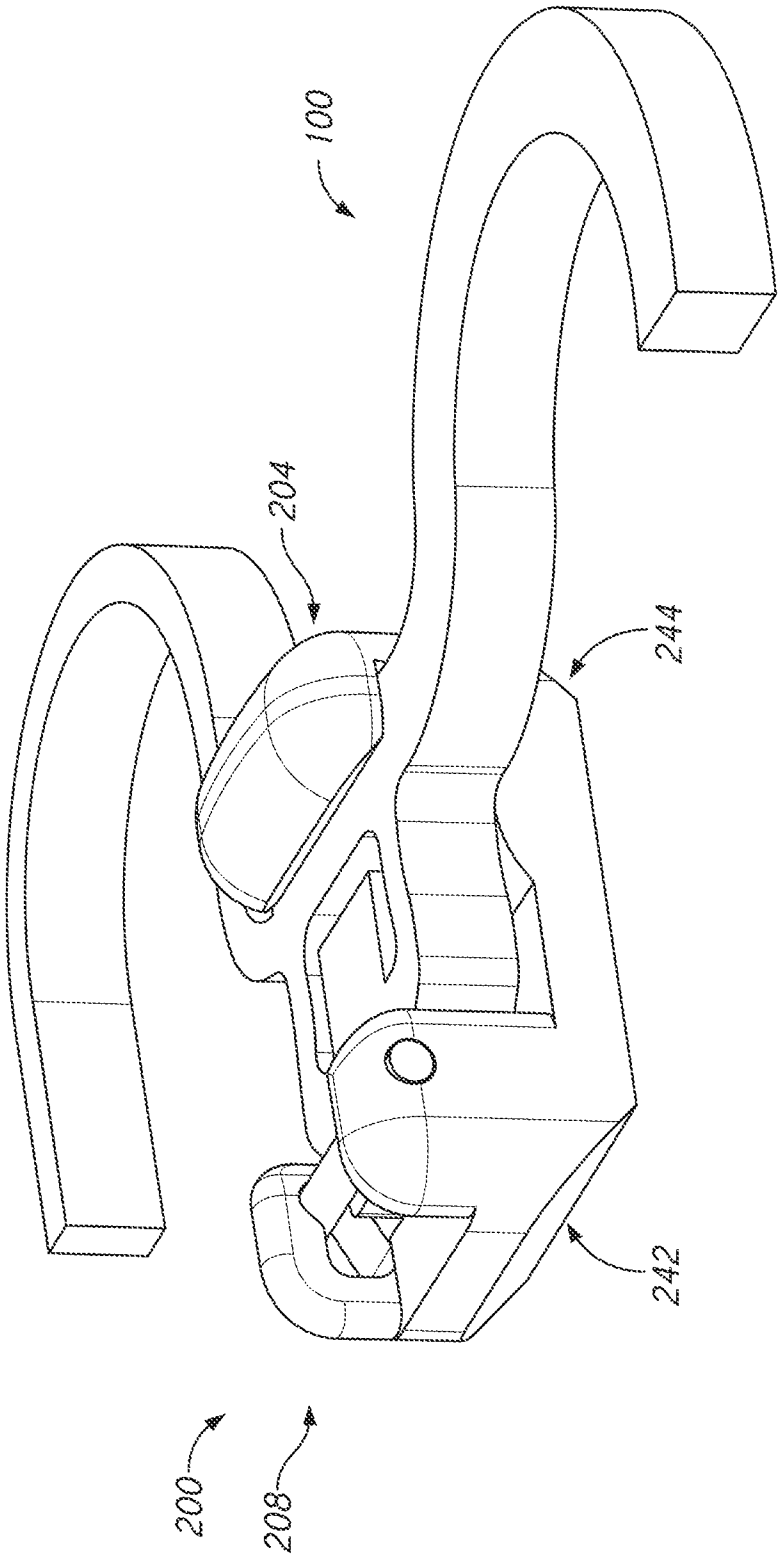

FIG. 3A

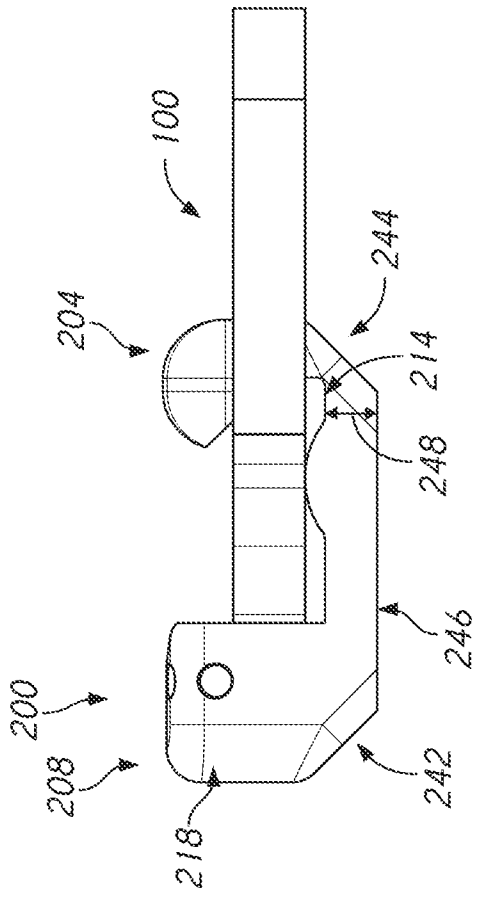
100
204
244
214
248
246
200
208
242
218

FIG. 3B

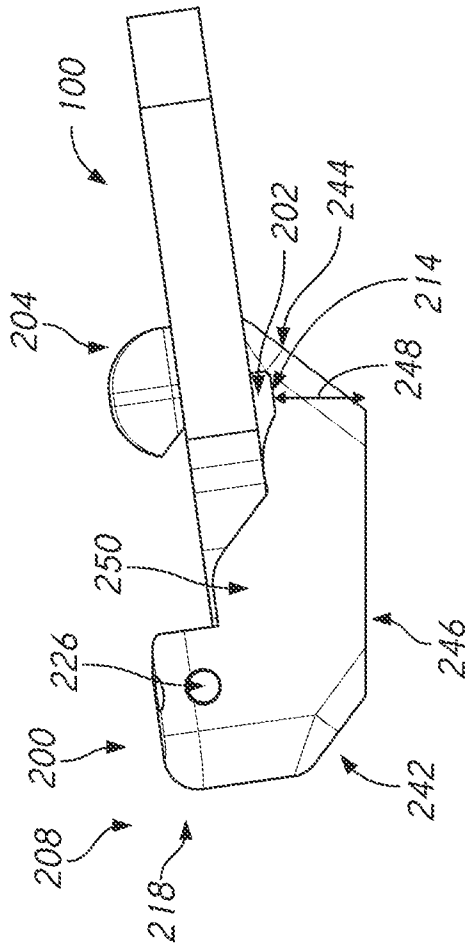
100
202
244
214
204
248
250
226
246
200
242
208
218

FIG. 4

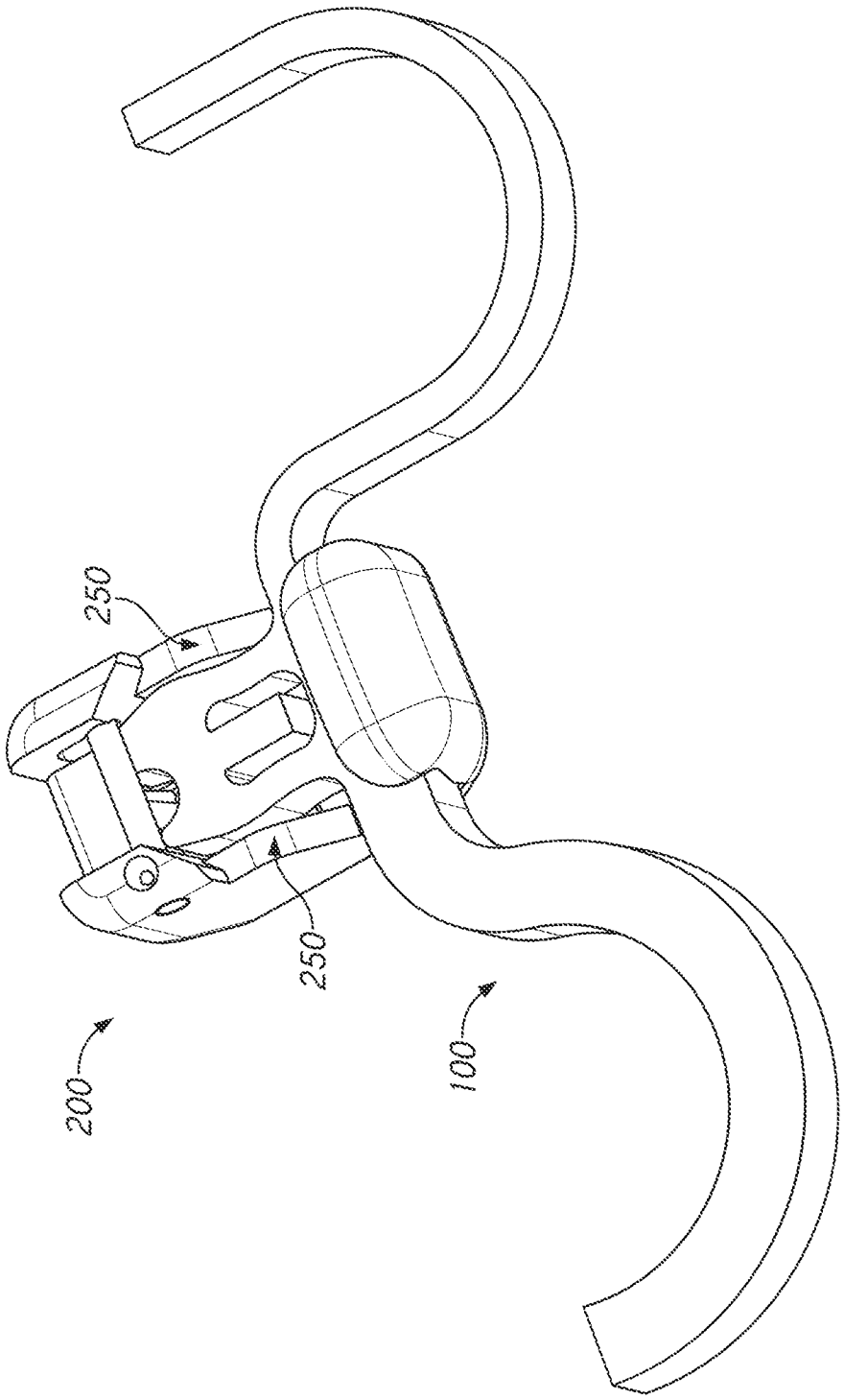

FIG. 5

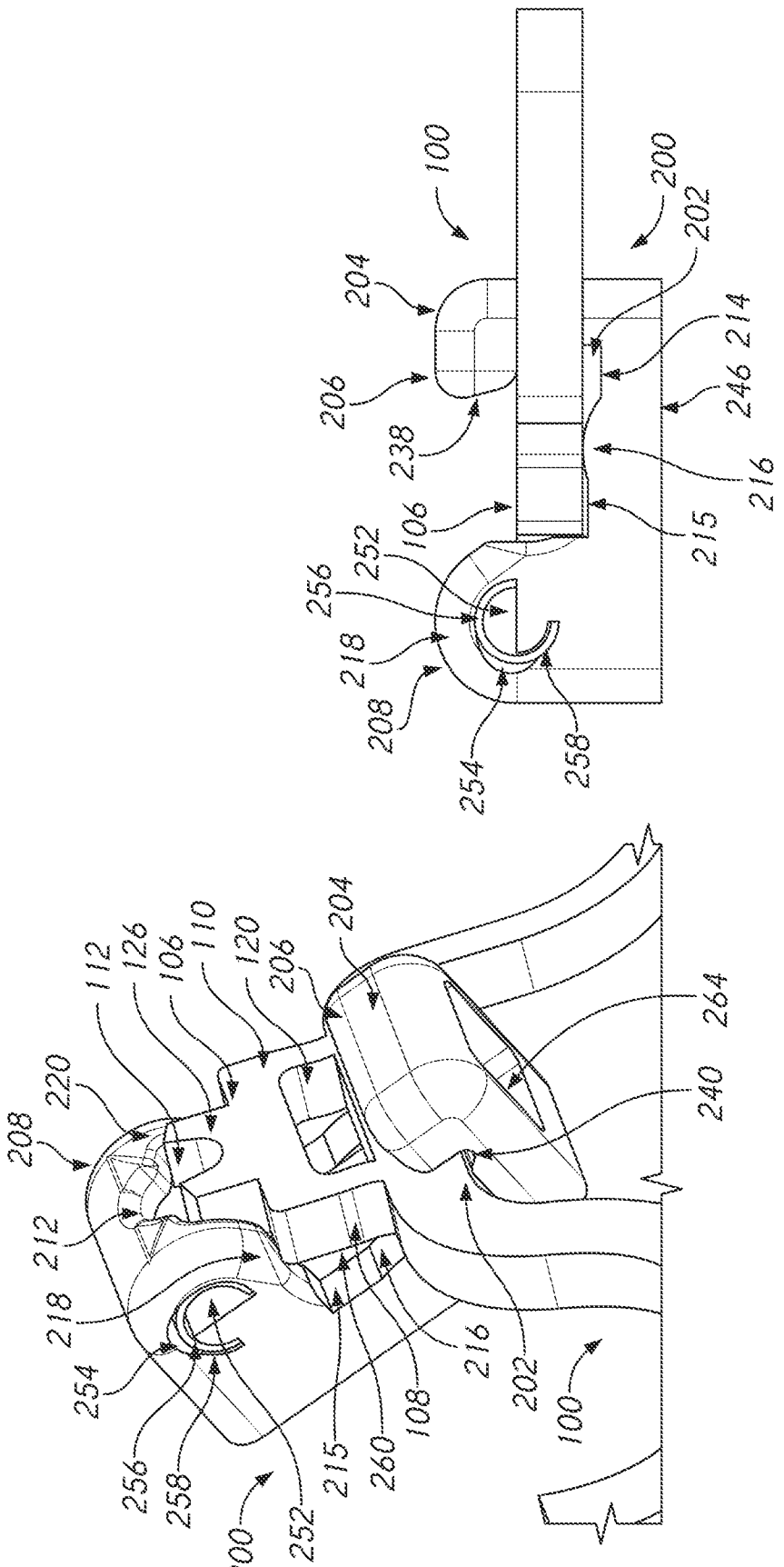
100
200
202
204
206
238
214
246
216
215
106
252
256
218
208
254
258
112
126
110
120
220
212
260
108
264
240

FIG. 6B

FIG. 6A

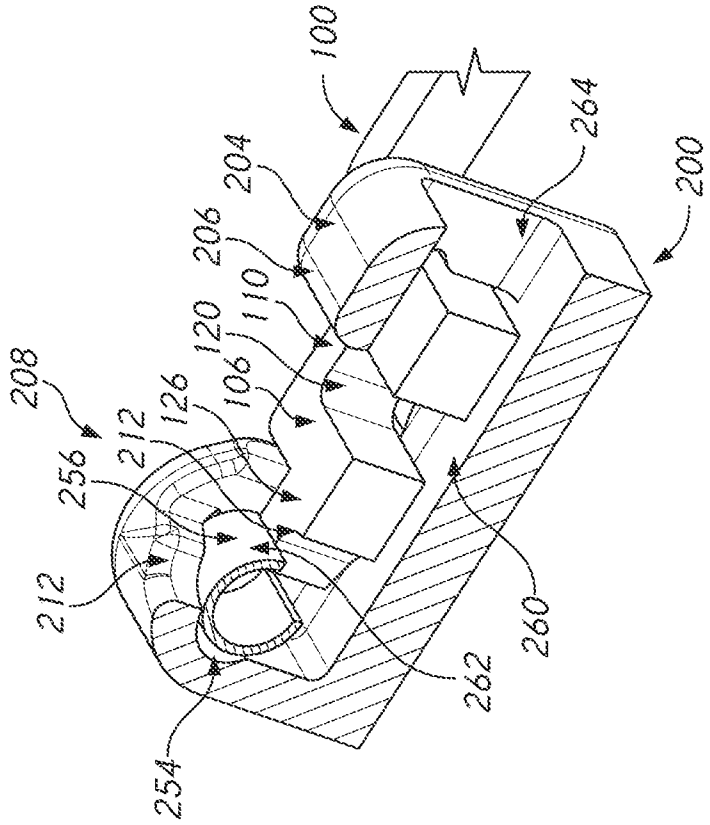
100
264
200
204
206
110
120
106
126
212
256
208
212
254
262
260

FIG. 6D

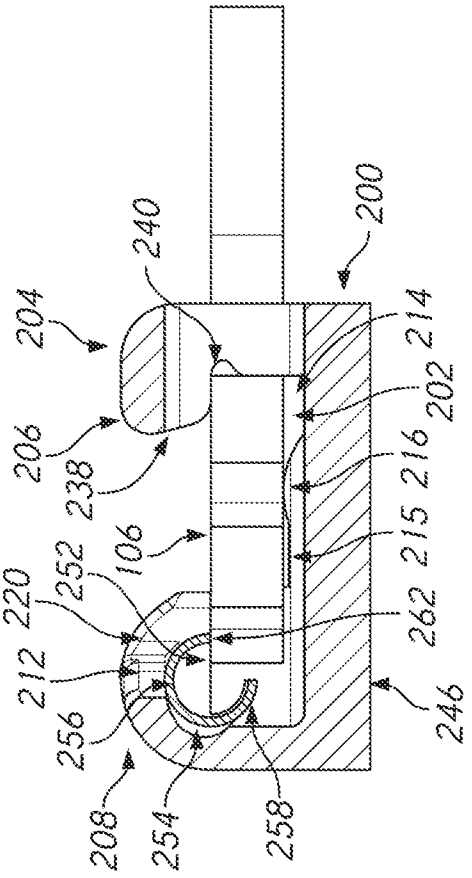
200
240
204
214
206
238
202
216
106
215
220
252
262
212
256
246
208
254
258

FIG. 6C

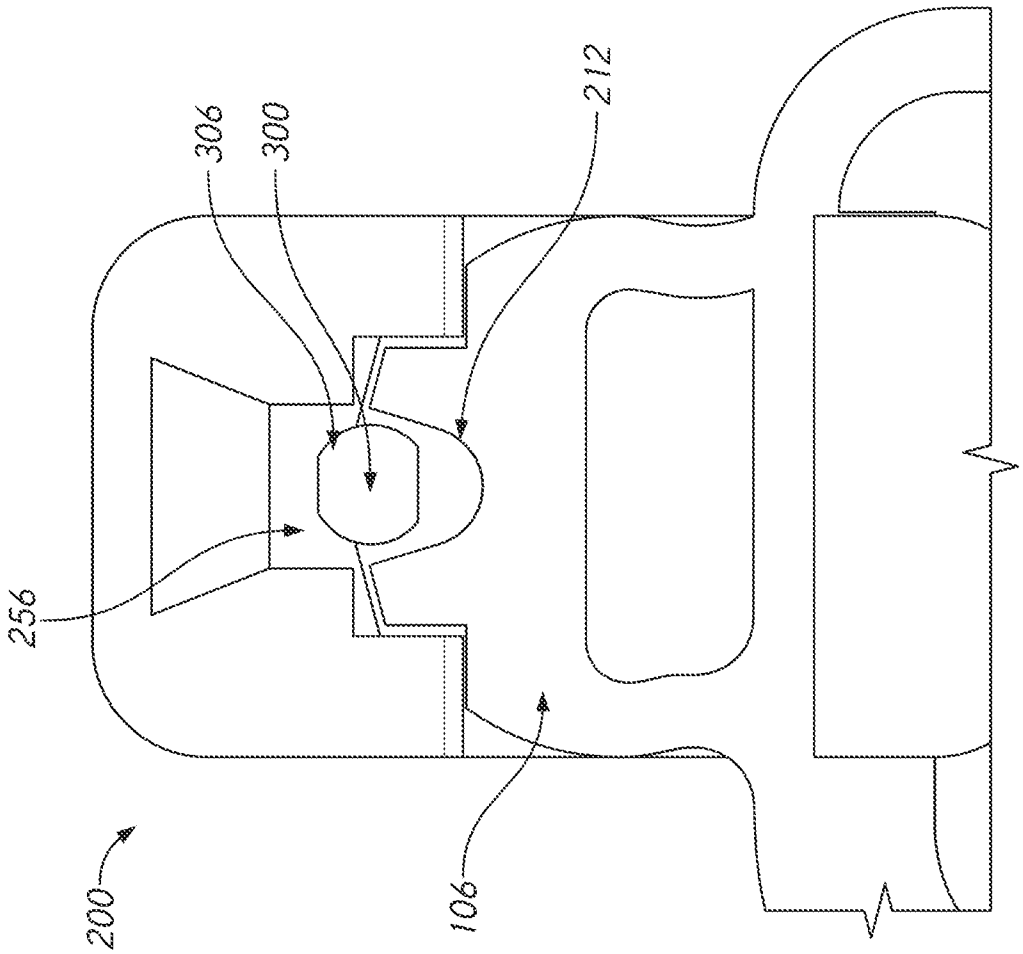

FIG. 6E

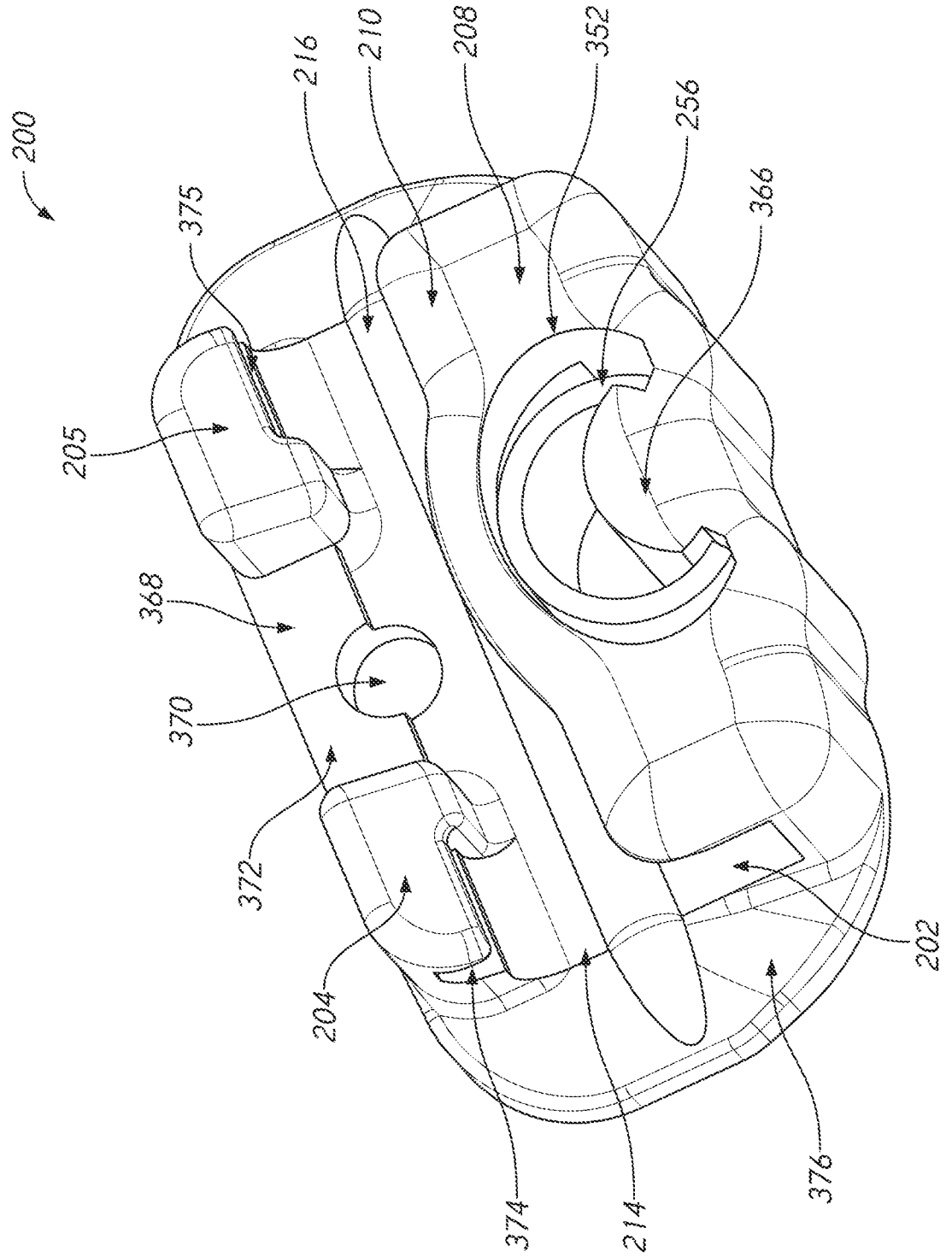
200
216
210
208
352
256
366
375
205
368
370
372
204
374
214
376
202

FIG. 7A

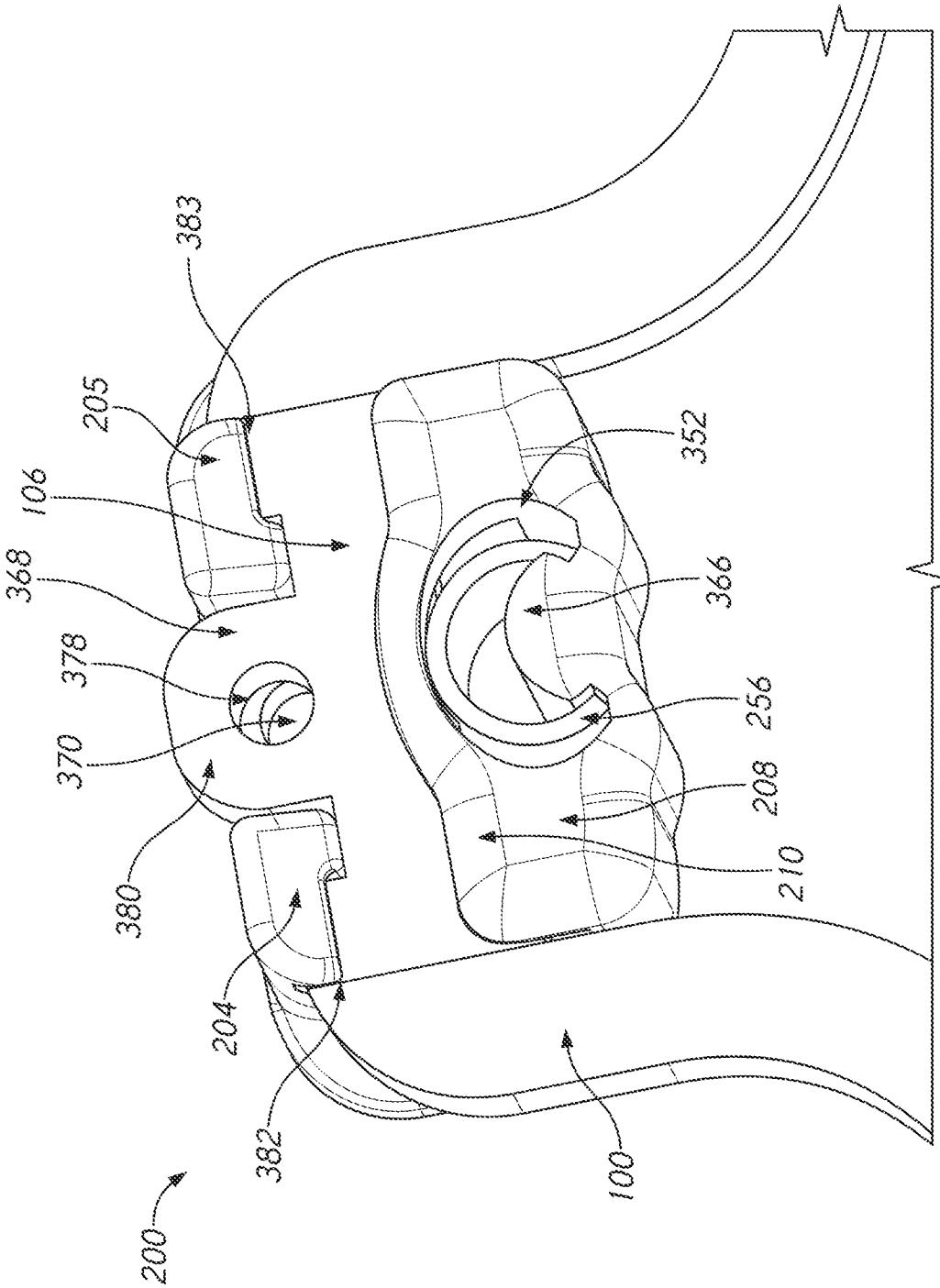

FIG. 7B

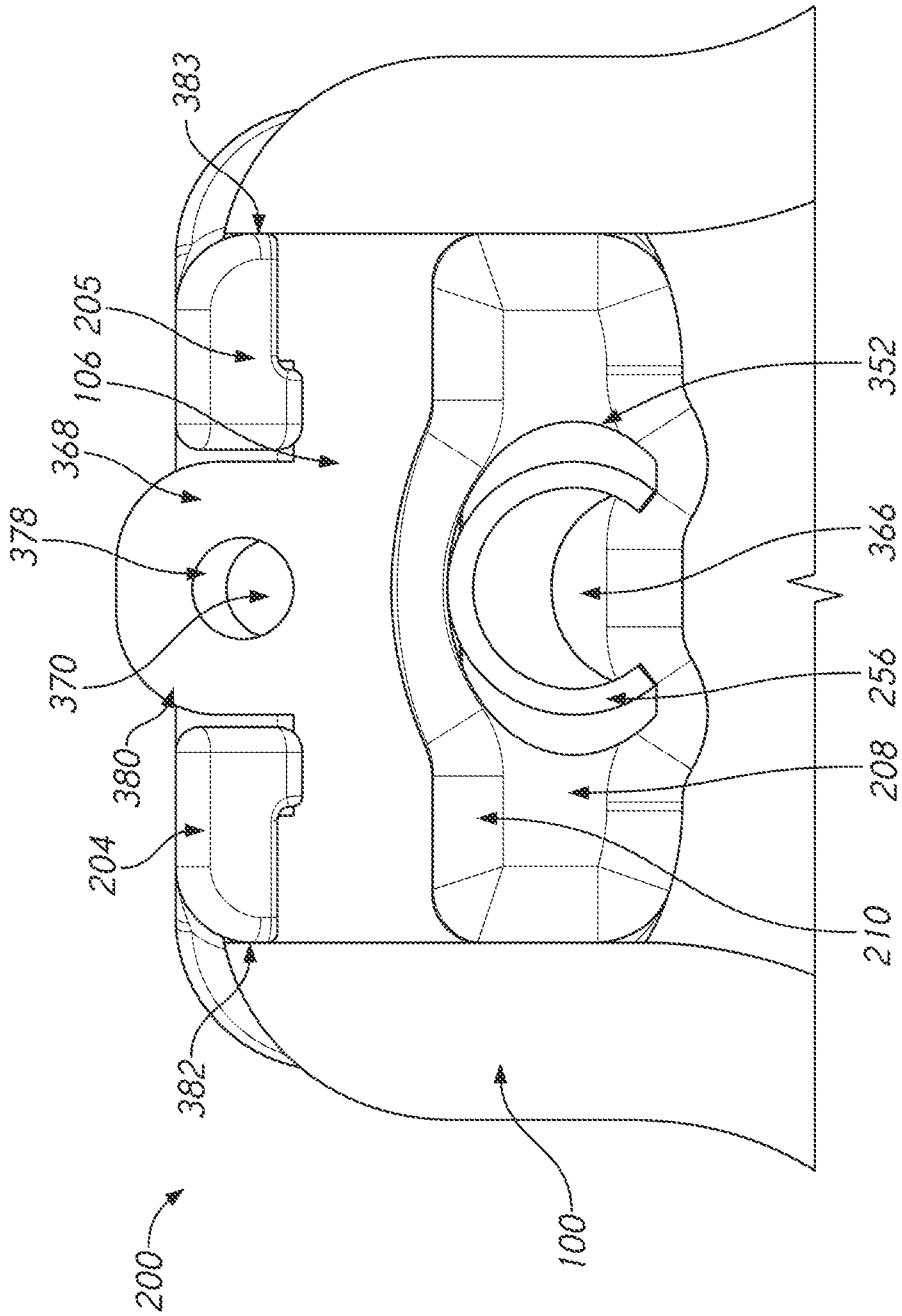

FIG. 7C

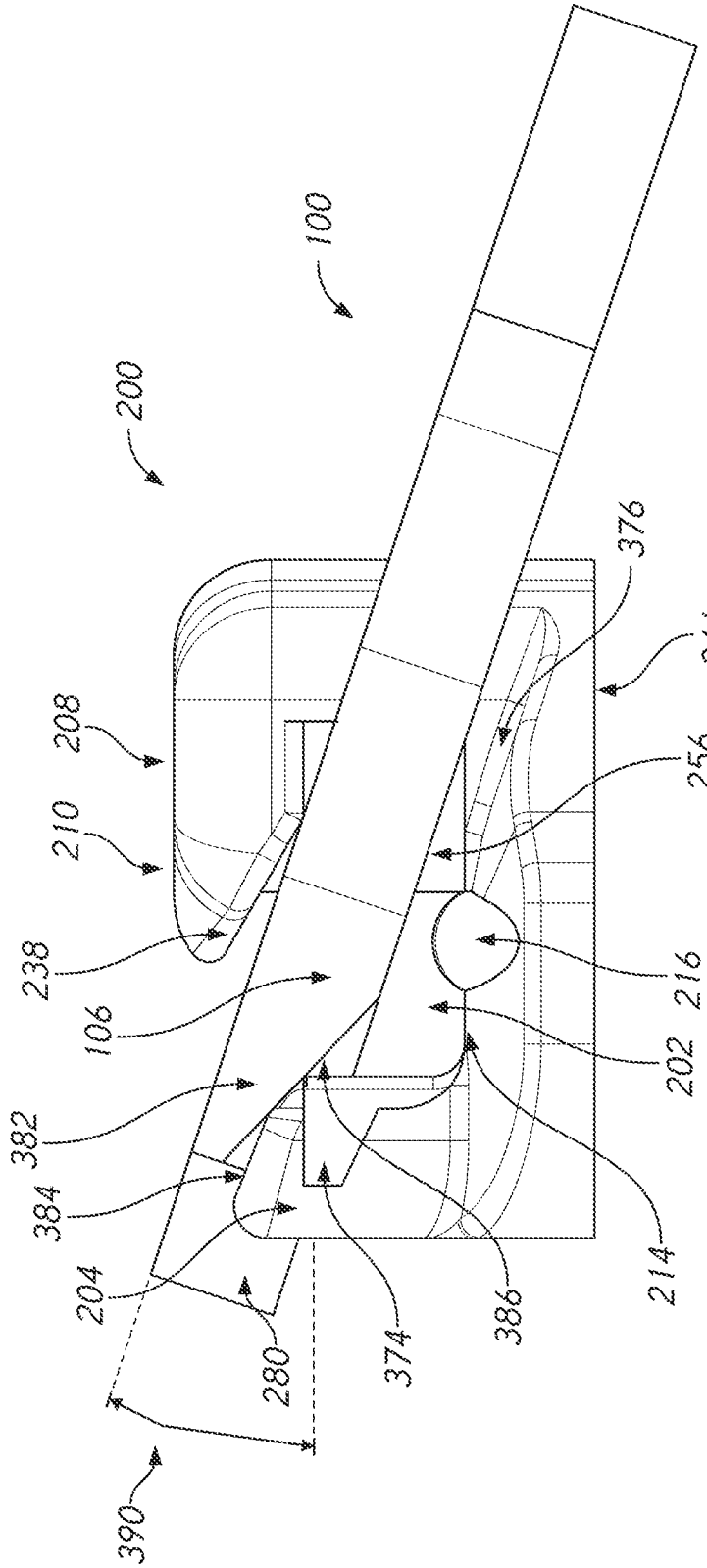
100
200
376
246
208
256
210
238
216
106
202
382
384
214
204
386
374
280
390

FIG. 7D

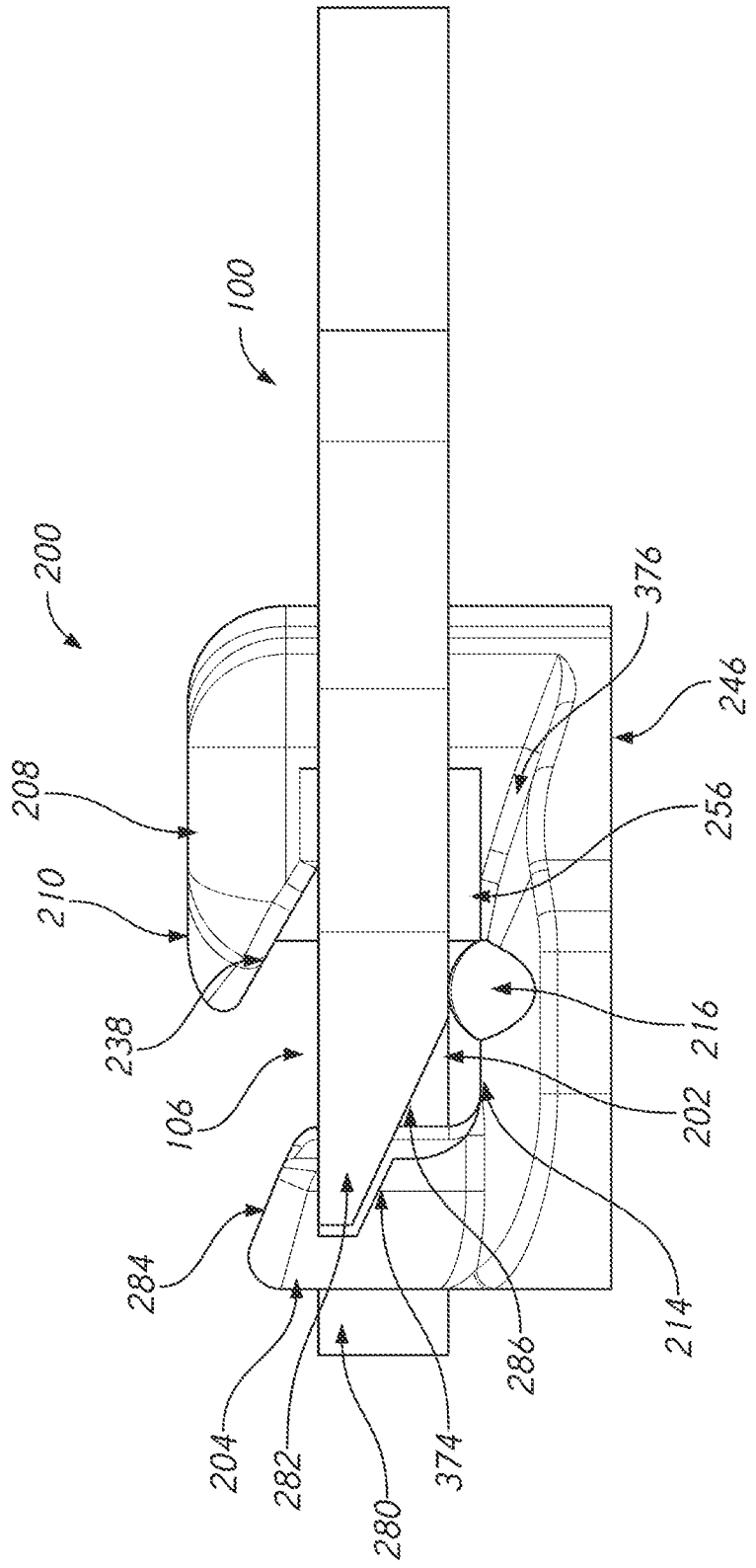
100
200
208
210
238
106
284
204
282
280
374
286
214
202
216
256
246
376

FIG. 7E

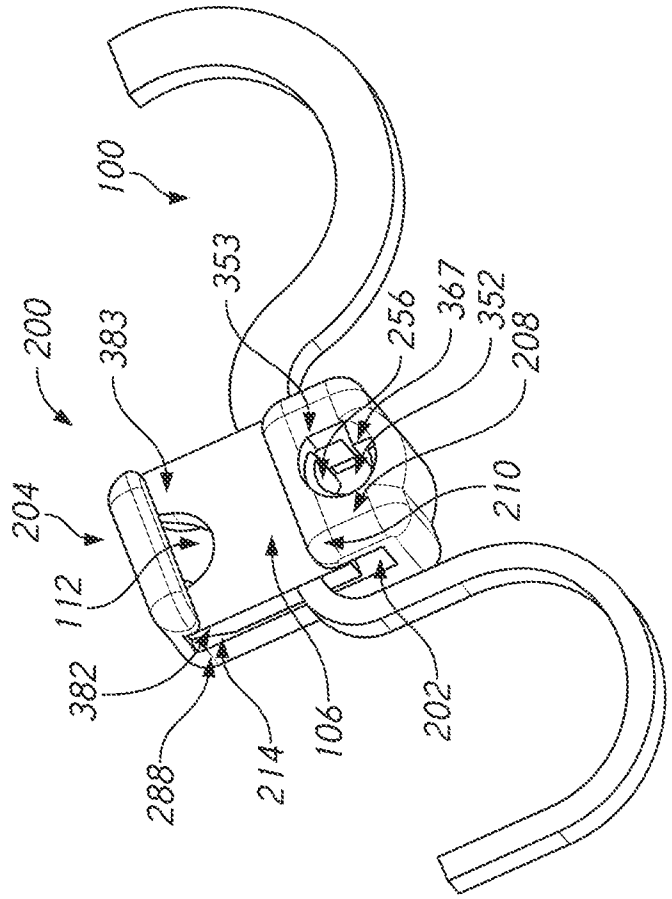
100
200
383
353
256
367
352
208
204
112
210
382
288
214
106
202

FIG. 7G

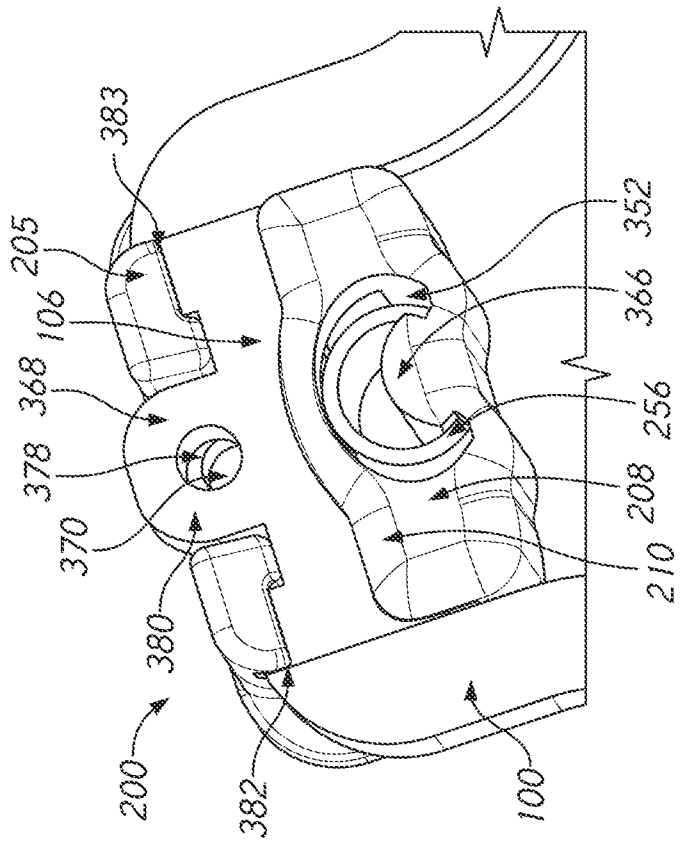
383
205
106
368
378
370
380
200
382
100
352
366
256
208
210

FIG. 7F

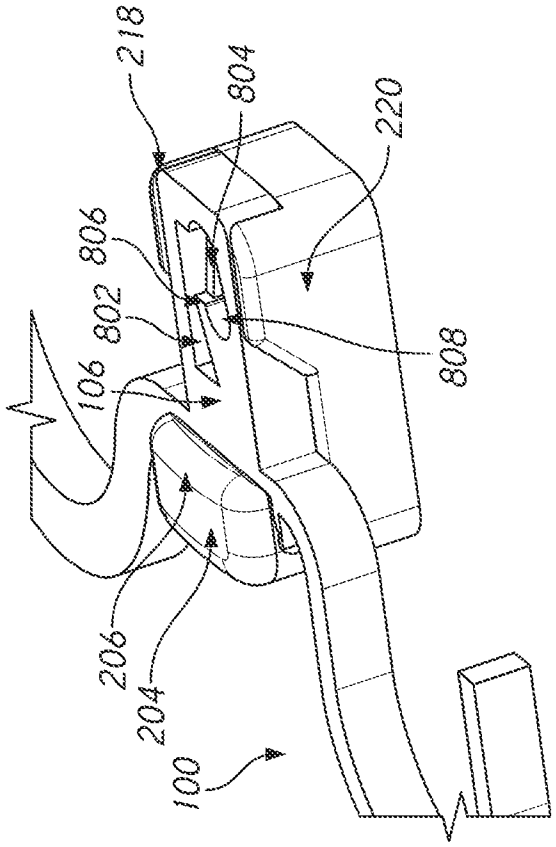
218
804
220
806
802
808
106
206
204
100

FIG. 8B

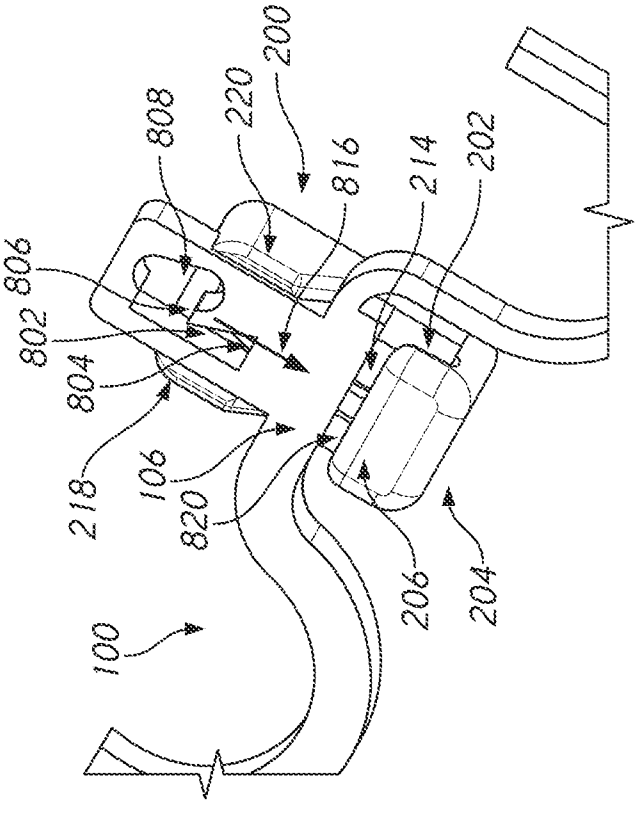
200
808
220
816
214
202
806
802
804
218
106
820
206
204
100

FIG. 8A

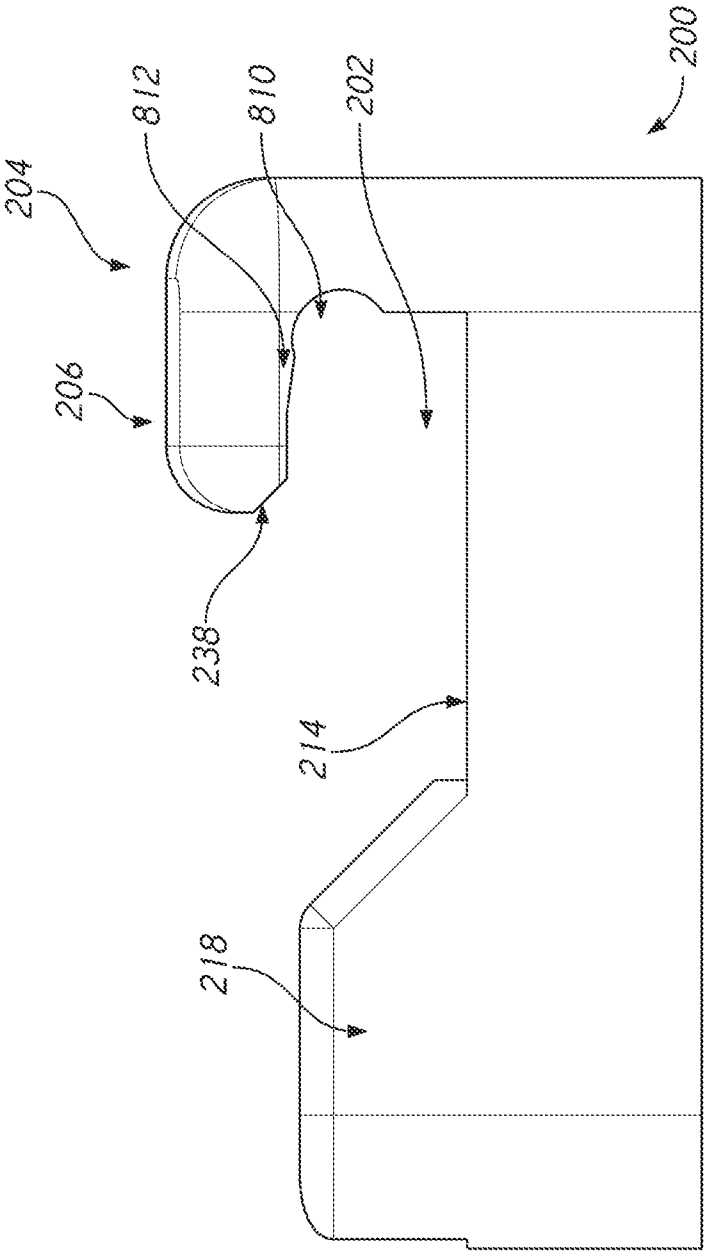

FIG. 8C

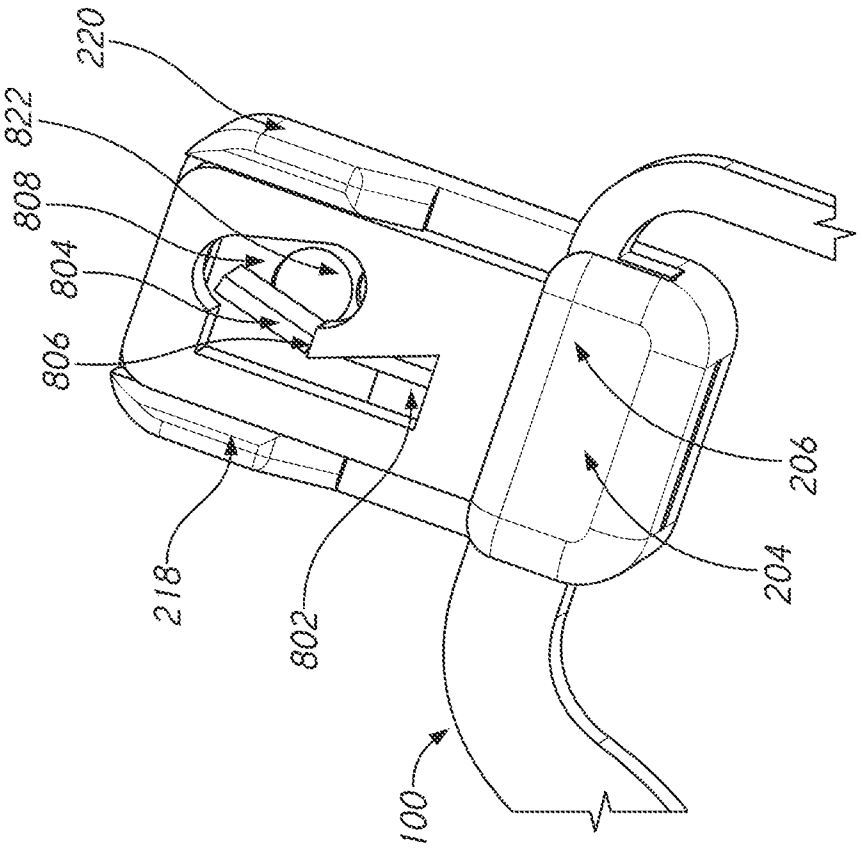

FIG. 8D

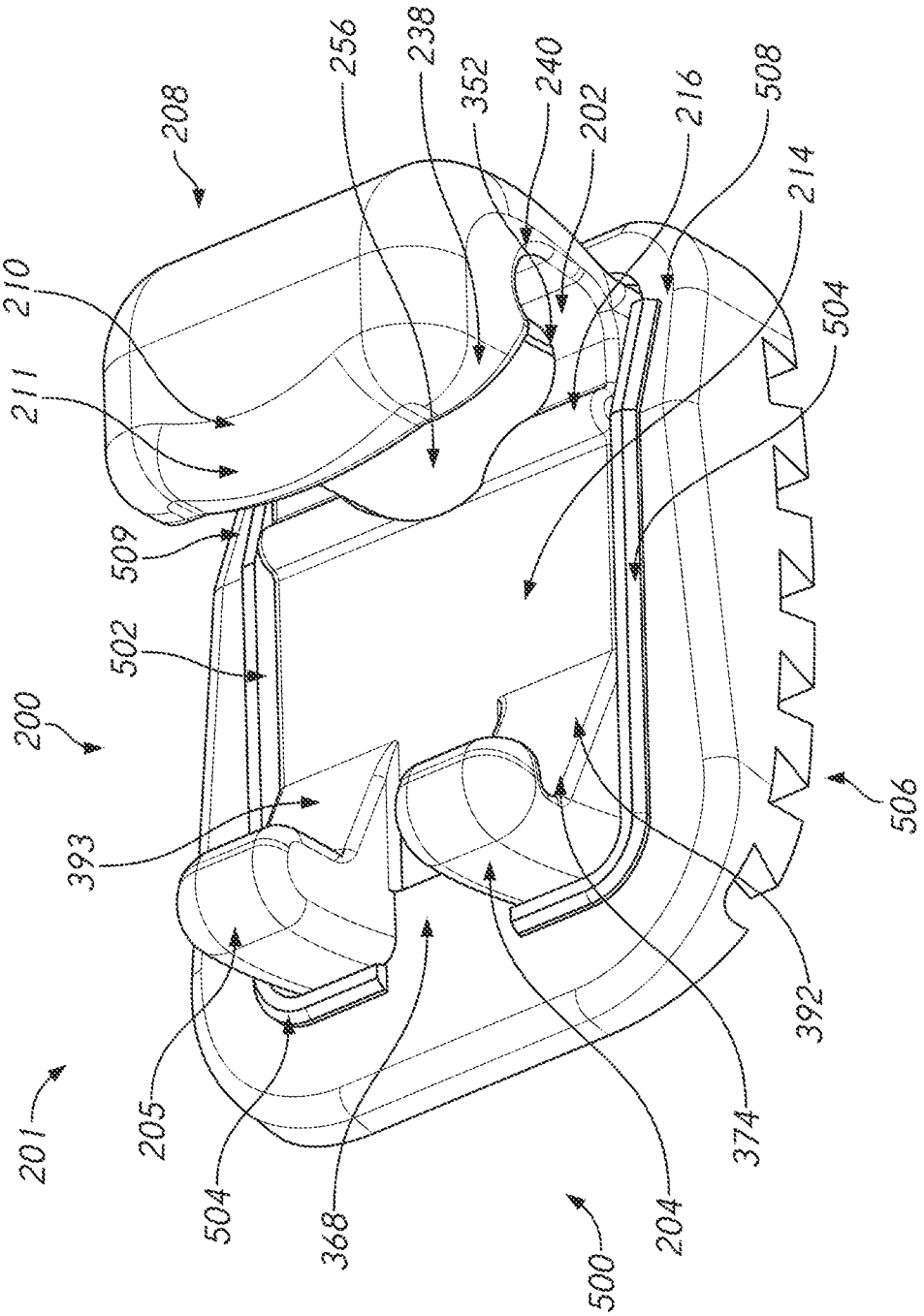
208
256
238
352
240
202
216
508
214
210
211
504
509
502
200
393
506
392
201
205
504
368
500
204
374

FIG. 9A

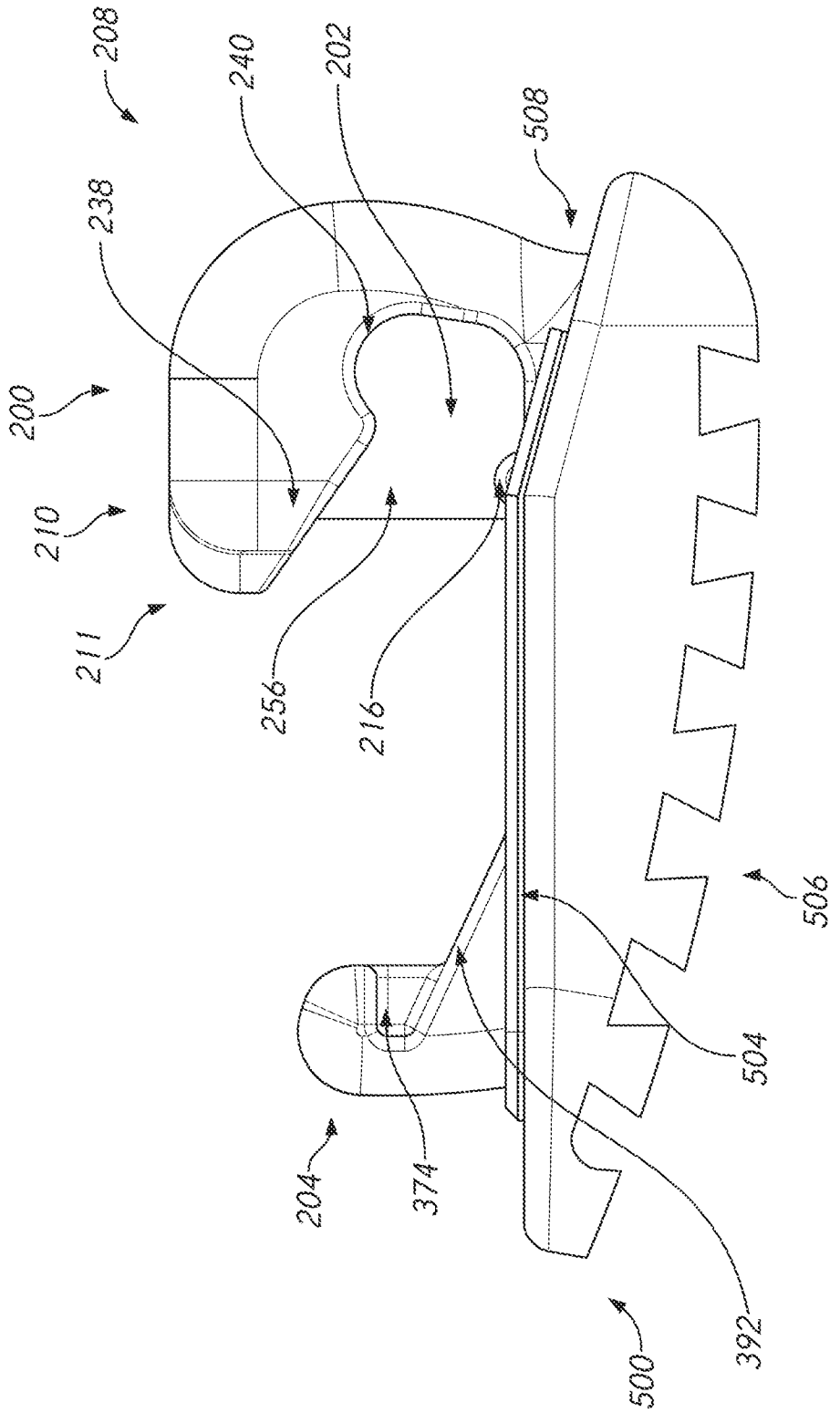

FIG. 9B

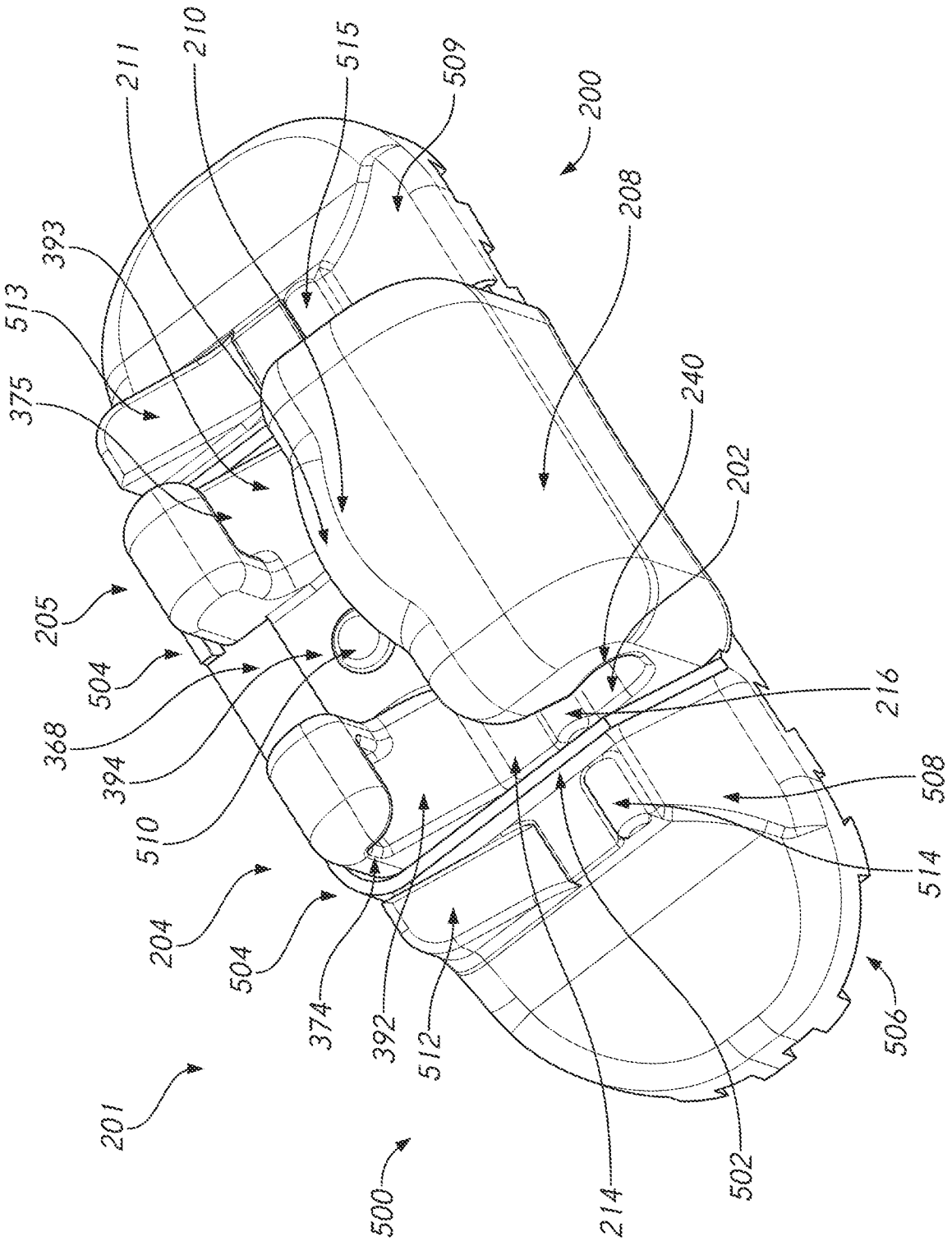
211
210
515
509
200
208
393
513
375
240
202
205
504
216
368
394
508
510
514
204
504
374
392
512
506
201
500
214
502

FIG. 10A

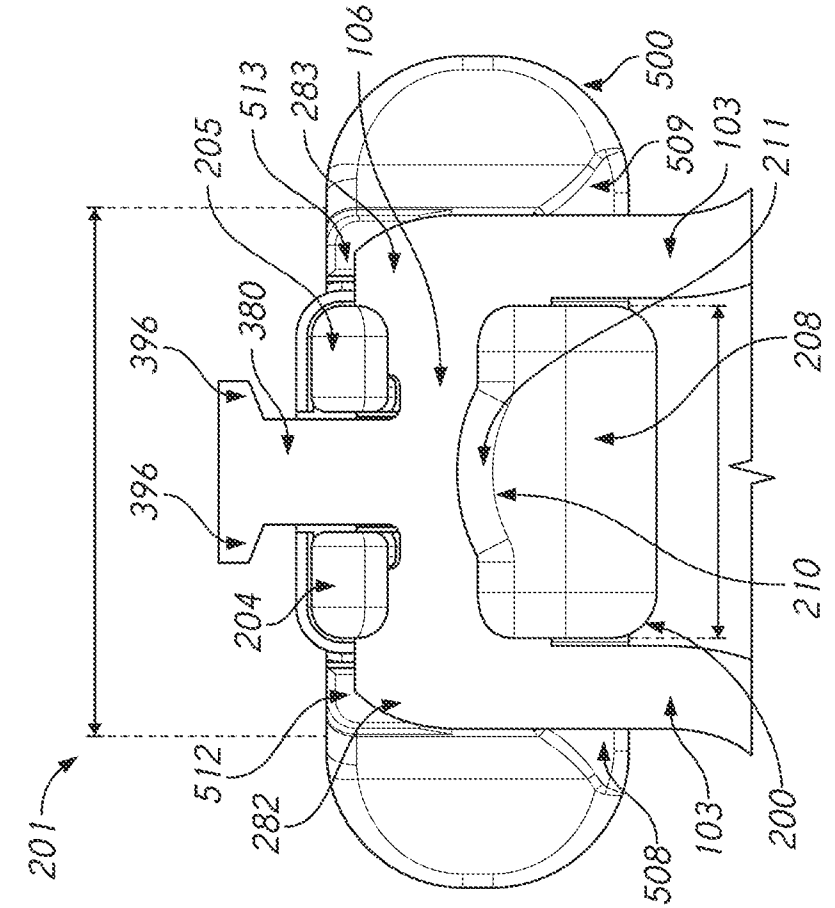

FIG. 10C

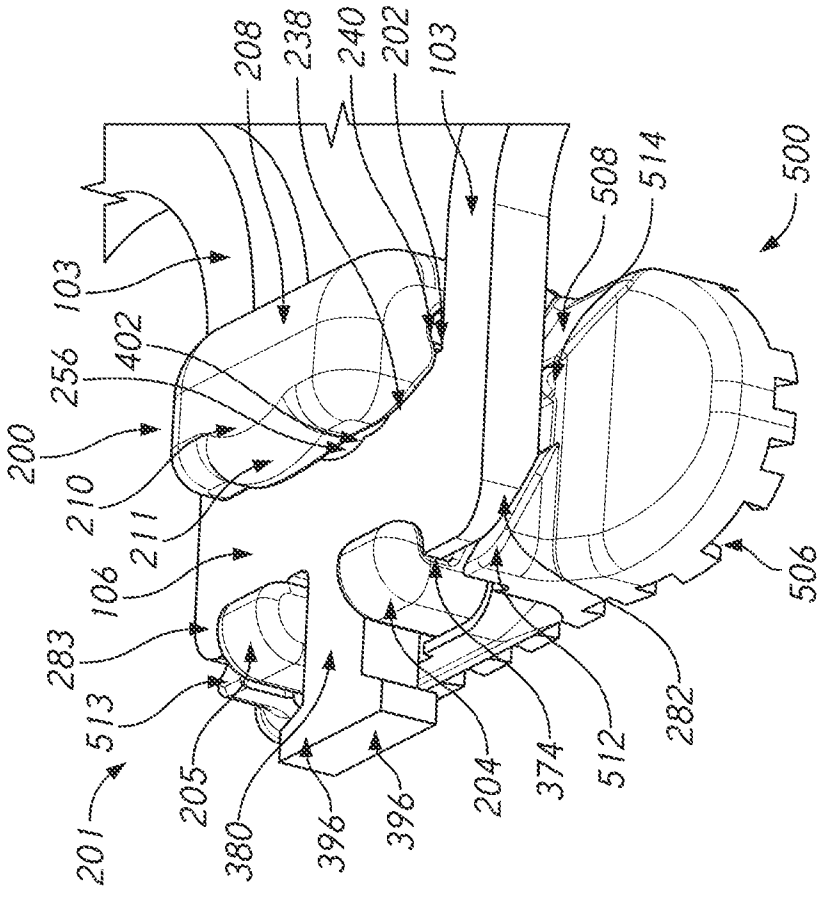

FIG. 10B

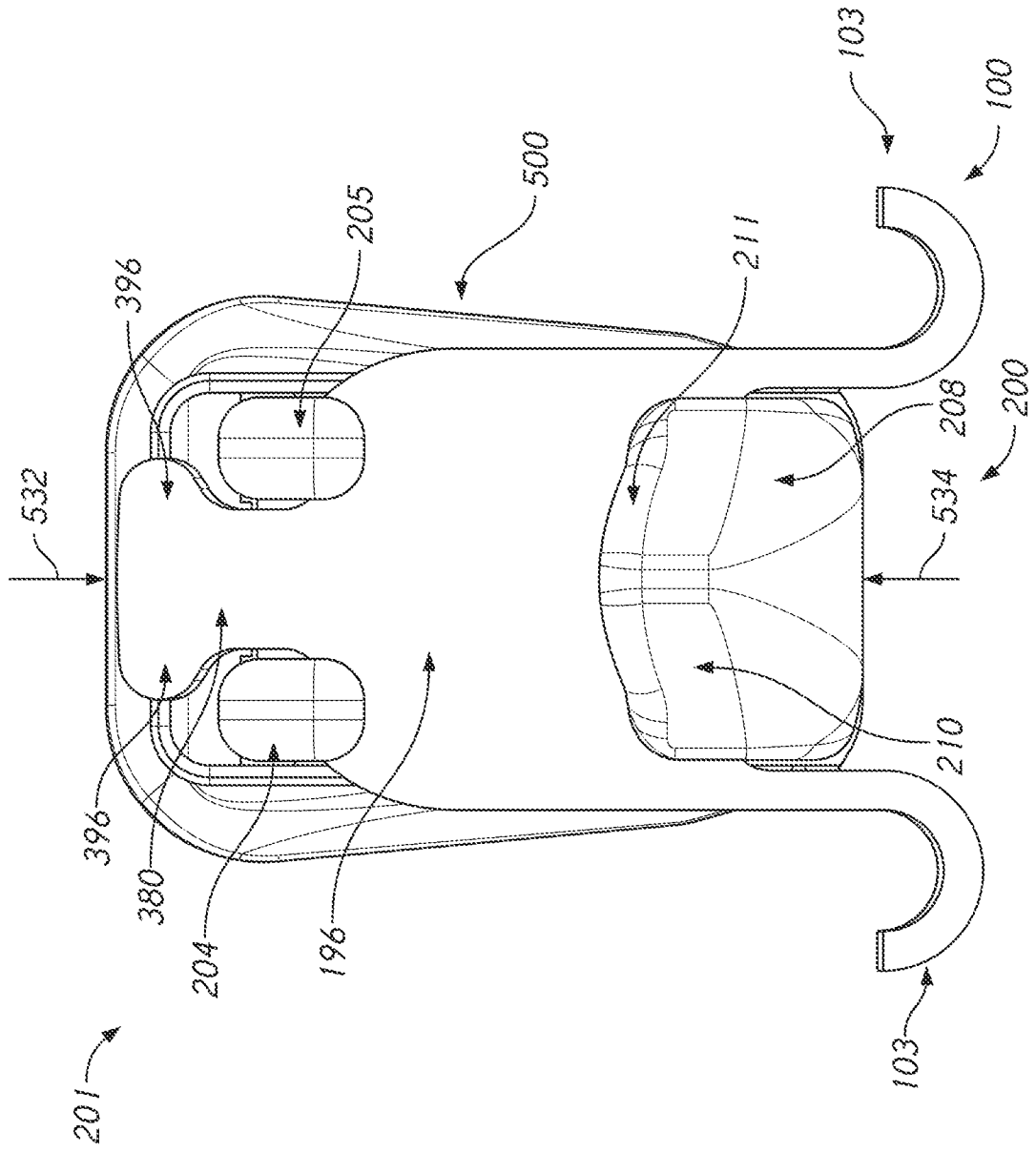
103
100
500
205
211
396
208
200
532
534
210
396
380
204
196
201
103

FIG. 11A

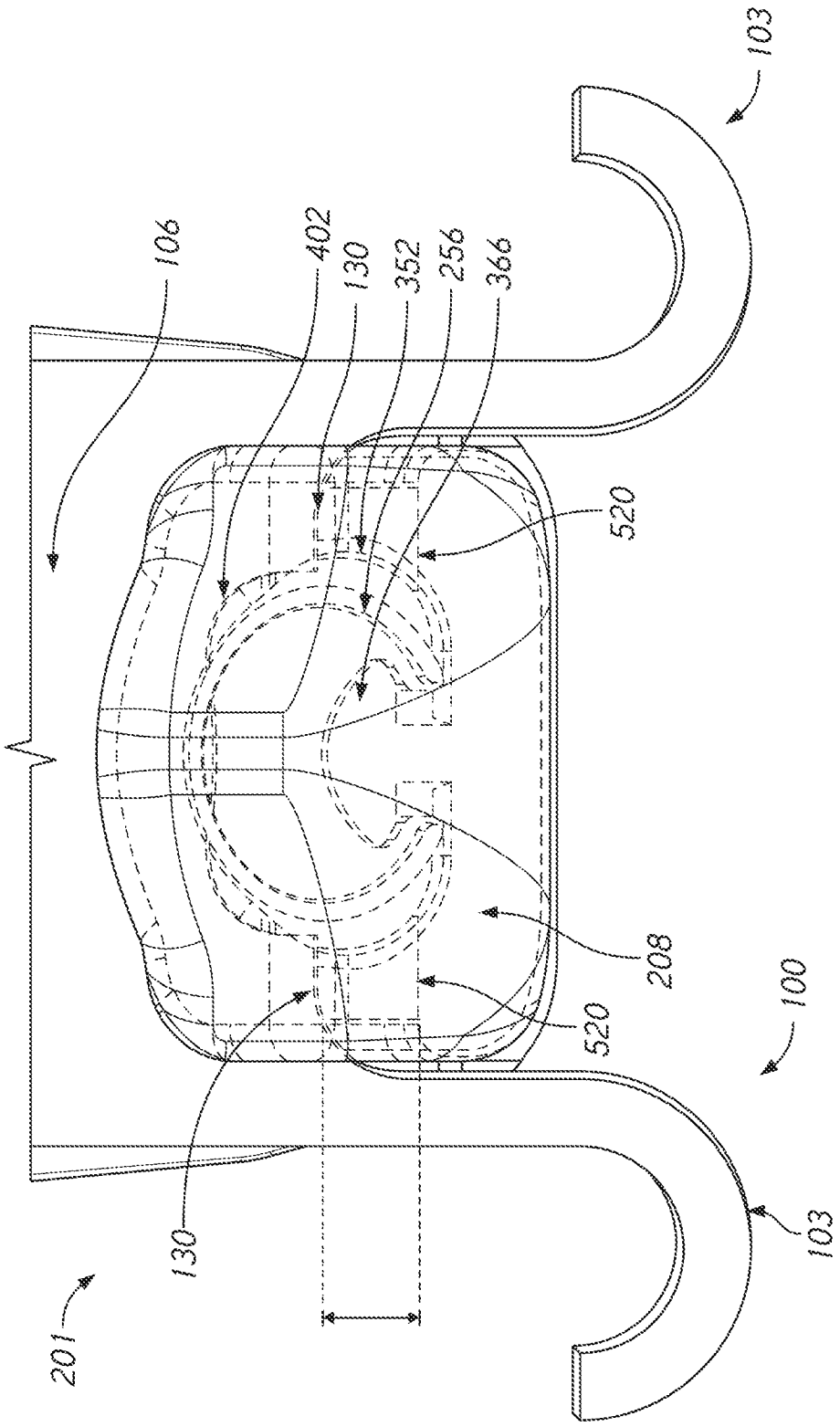

FIG. 11B

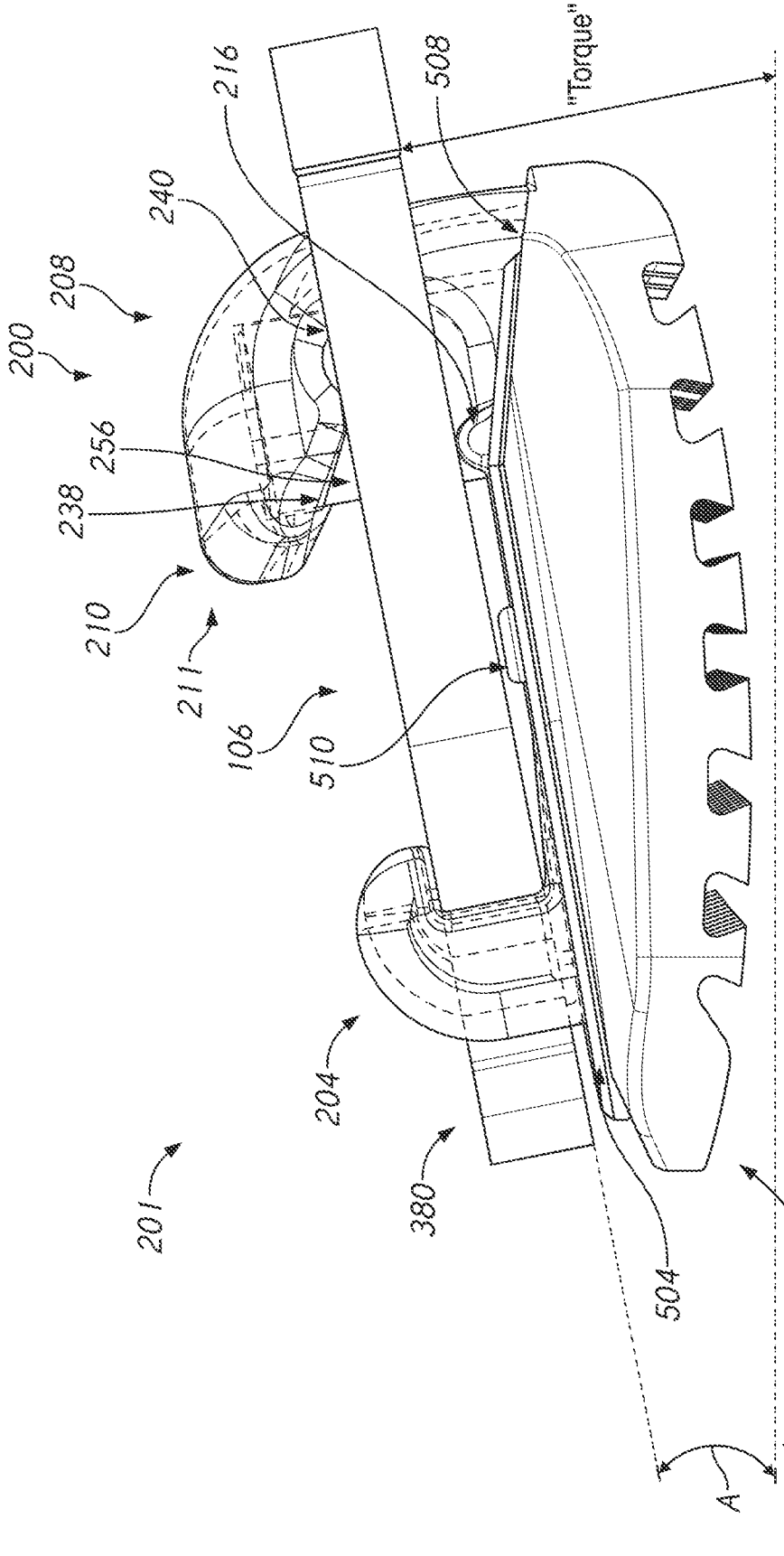
"Torque"
216
508
240
208
200
256
238
210
211
106
510
204
201
380
504
500
506
A
534

FIG. 11C

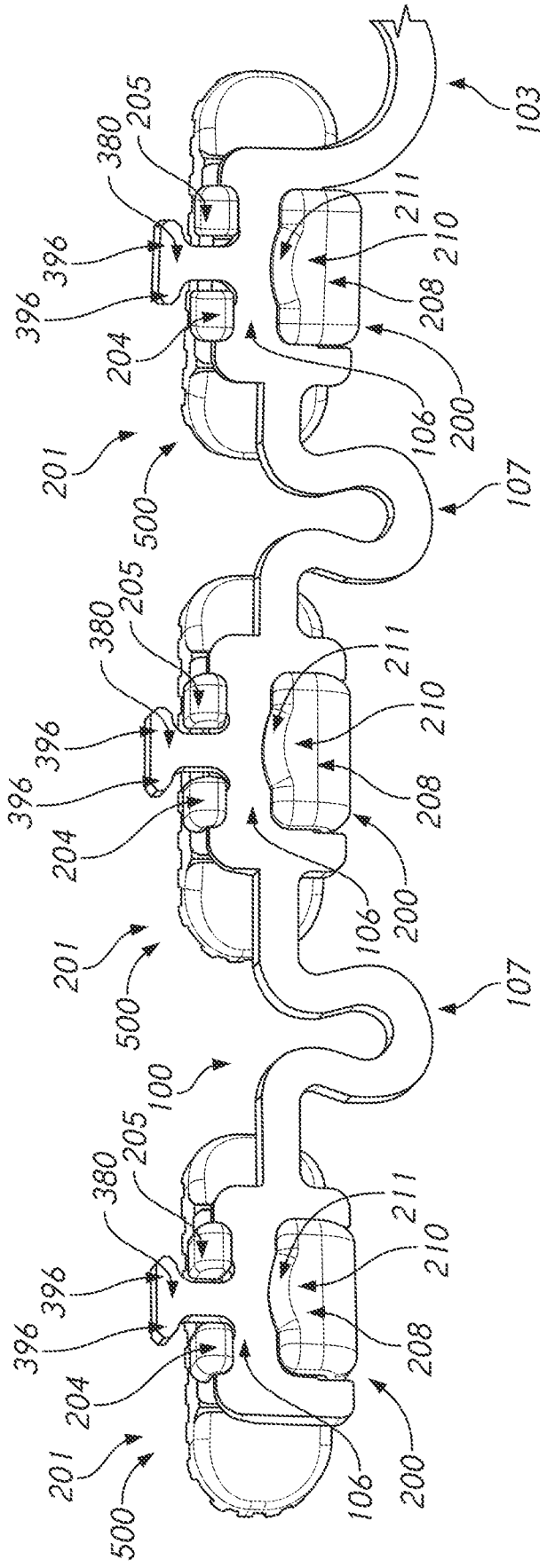

FIG. 12

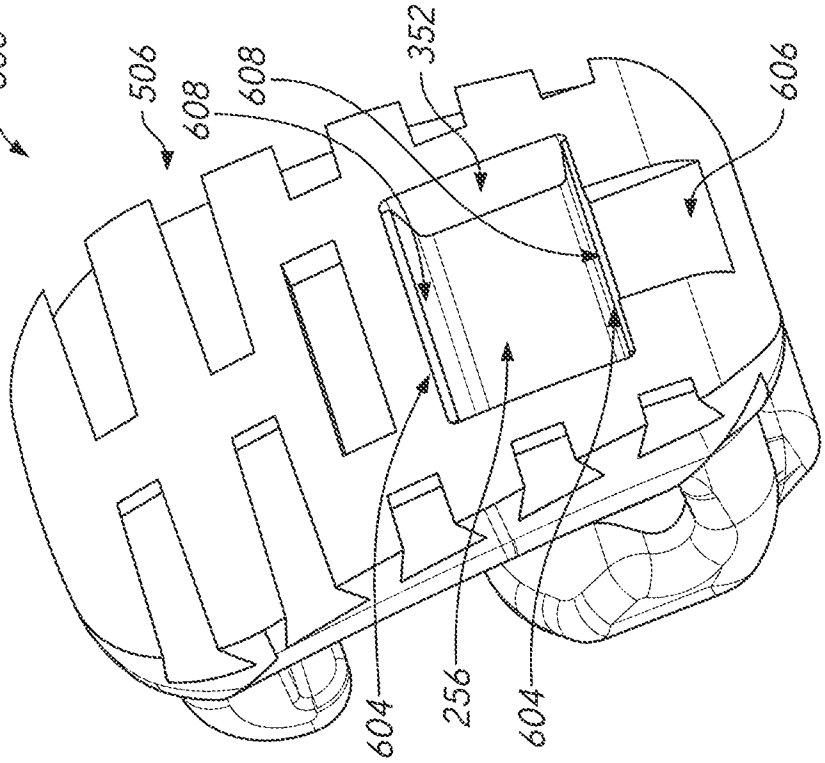

FIG. 13B

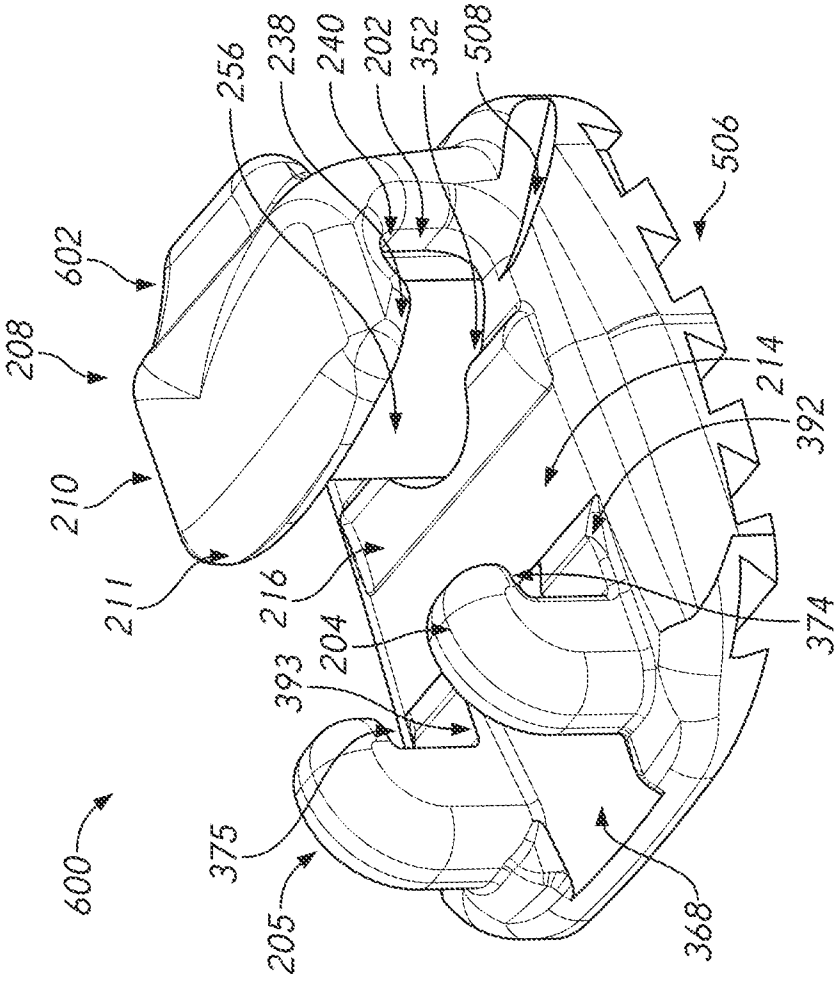

FIG. 13A

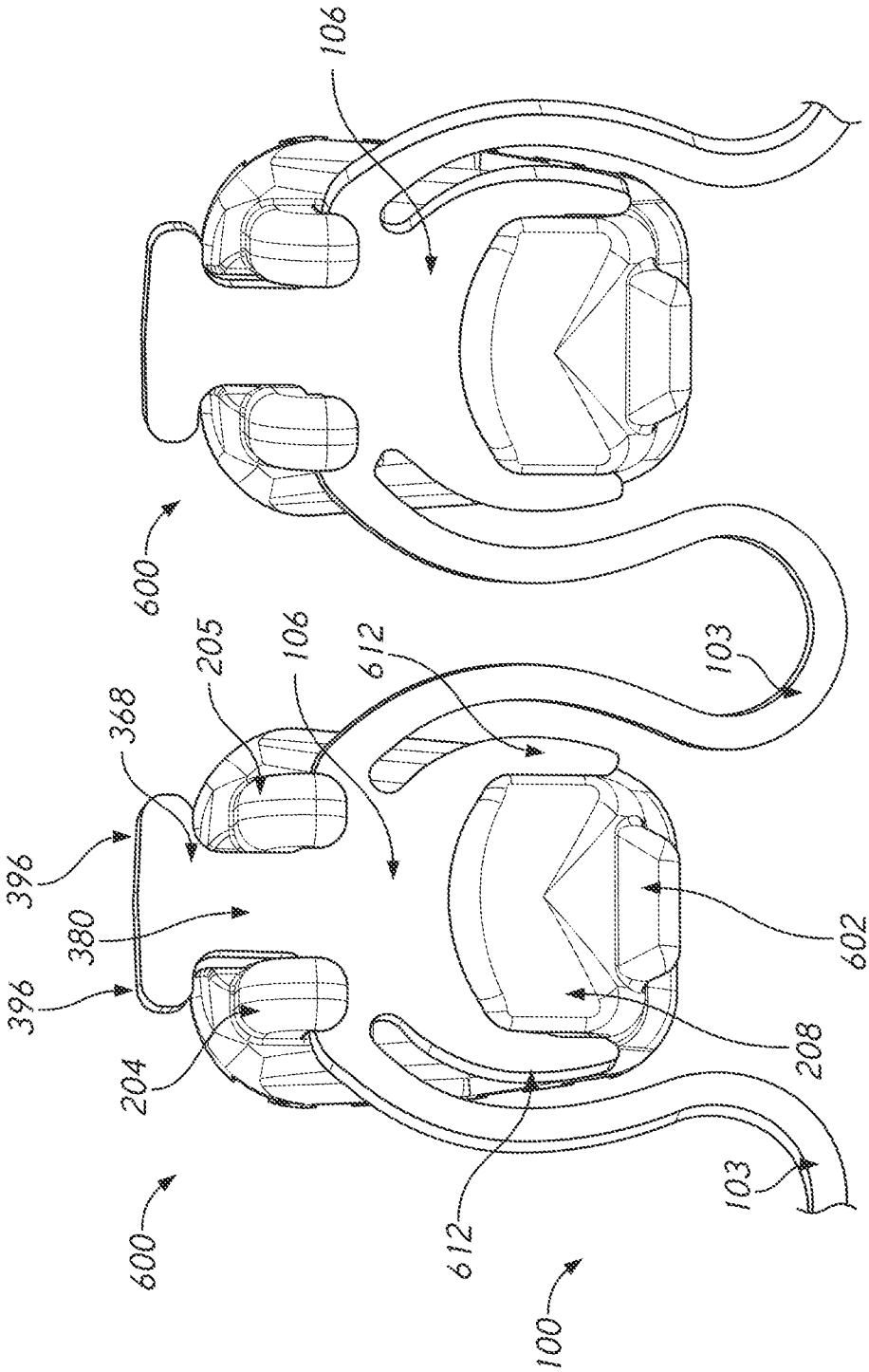
106
600
205
106
612
103
368
396
380
396
204
602
208
103
600
612
100

FIG. 13C

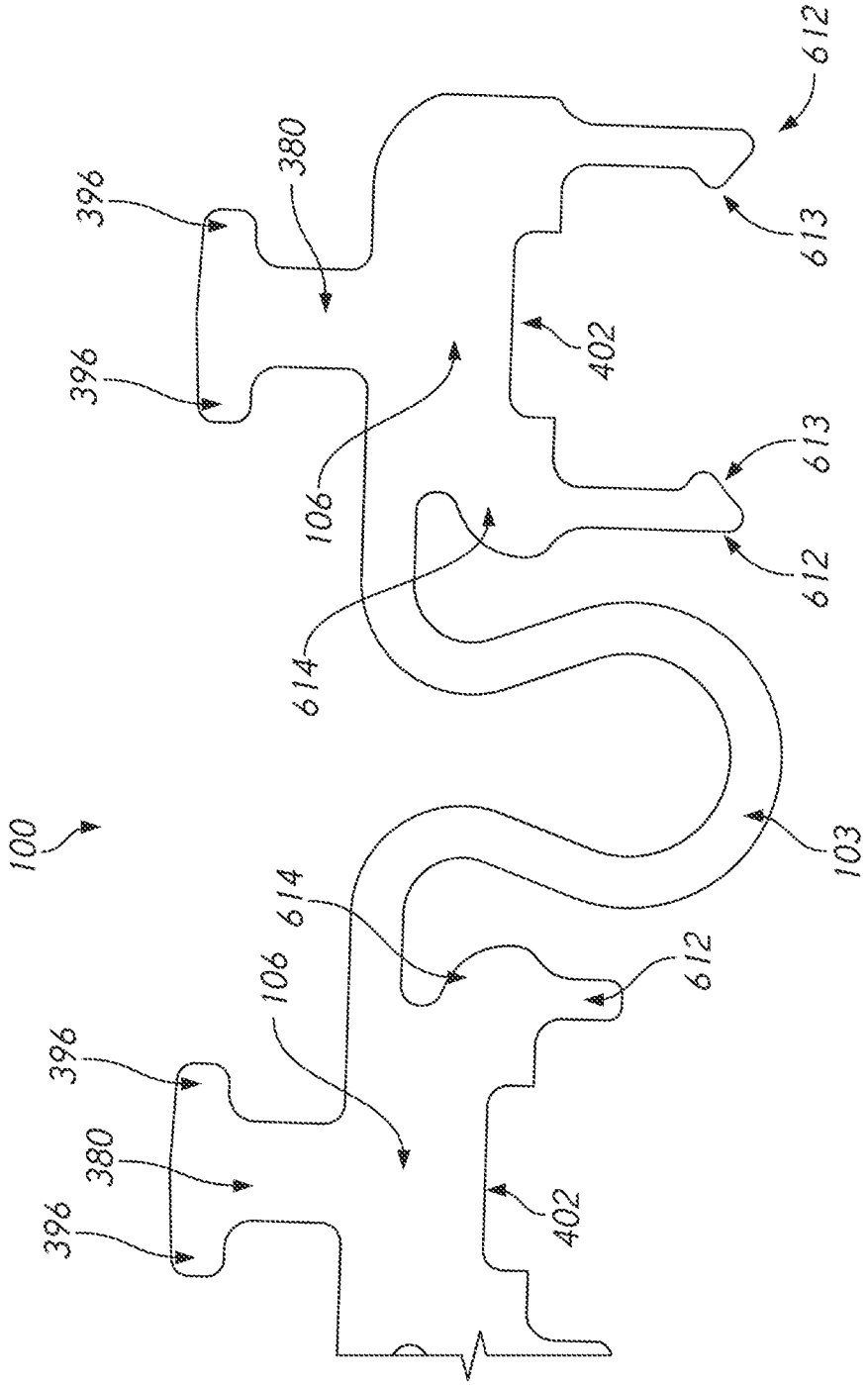
100
396
380
396
106
614
612
613
402
613
612
614
103
612
396
380
396
106
402

FIG. 13D

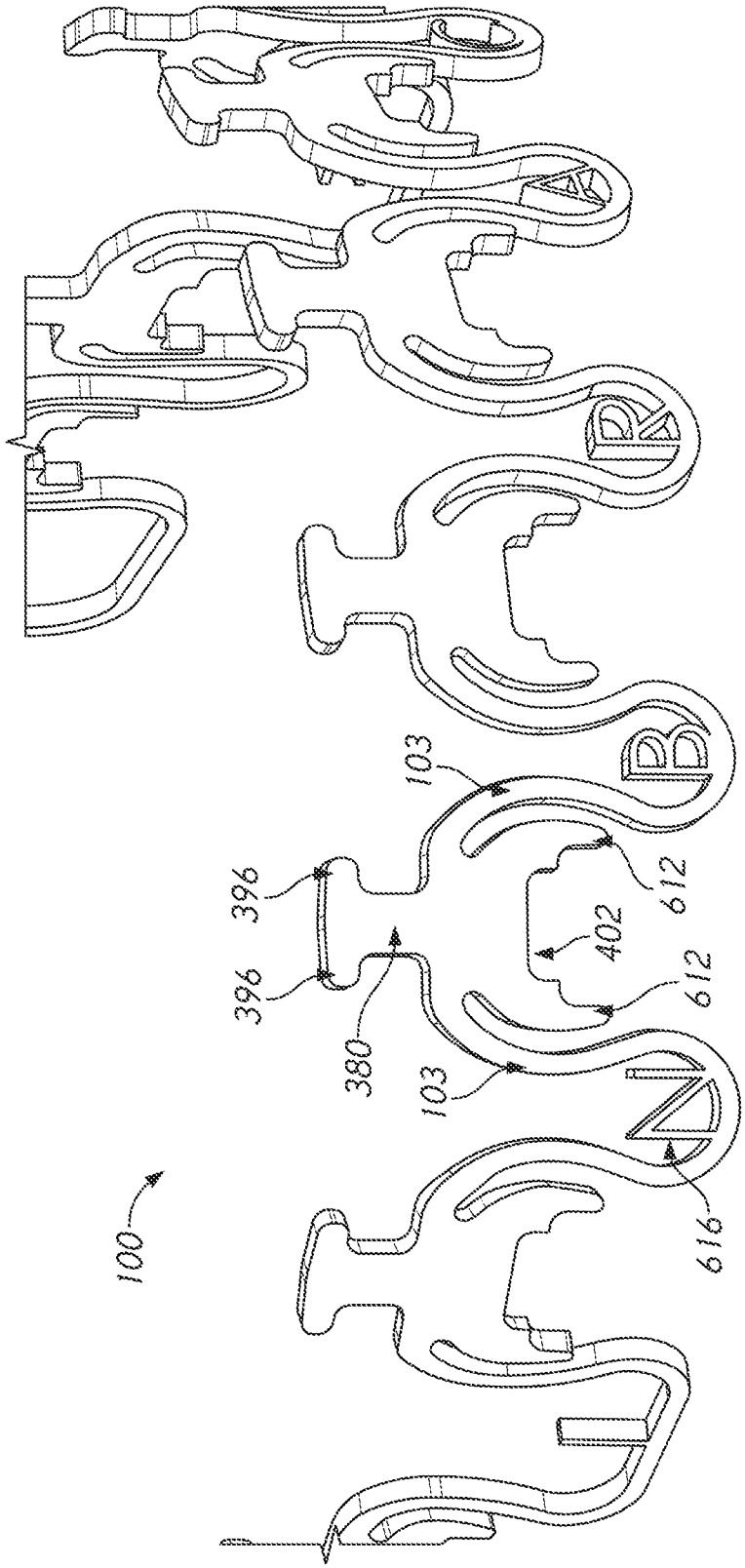

FIG. 13E

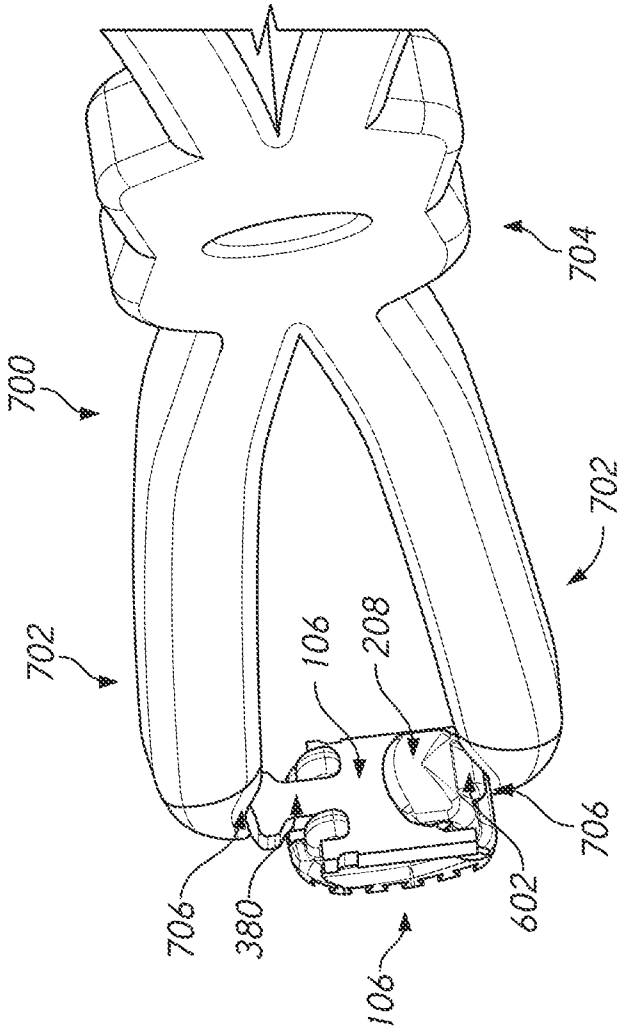

FIG. 14B

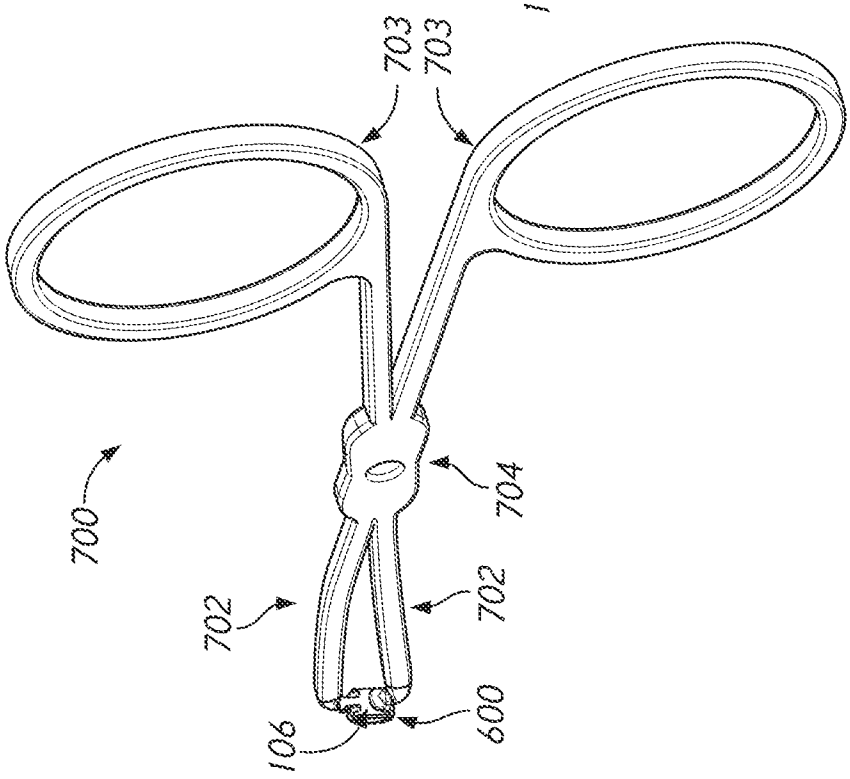

FIG. 14A

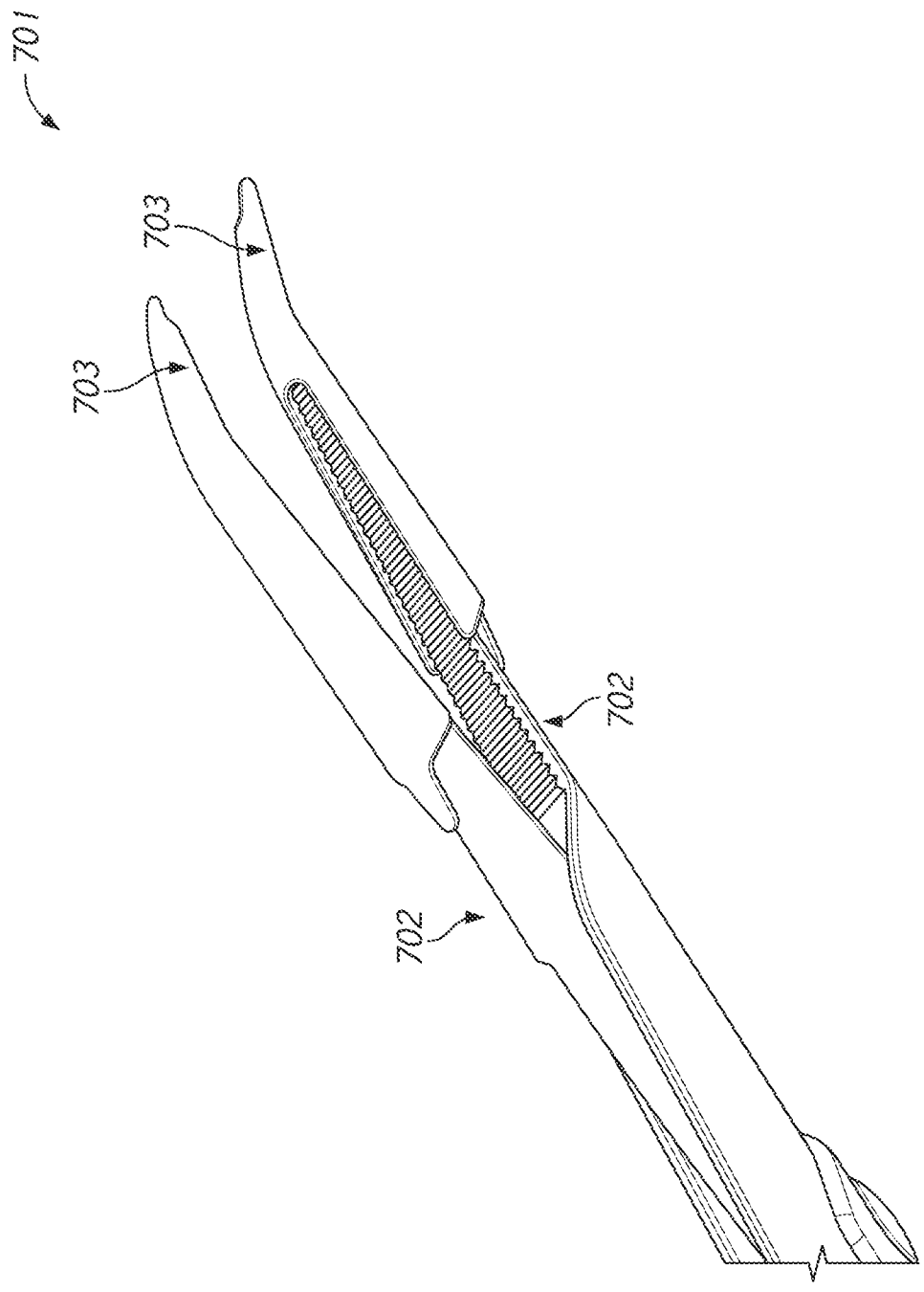

FIG. 14C

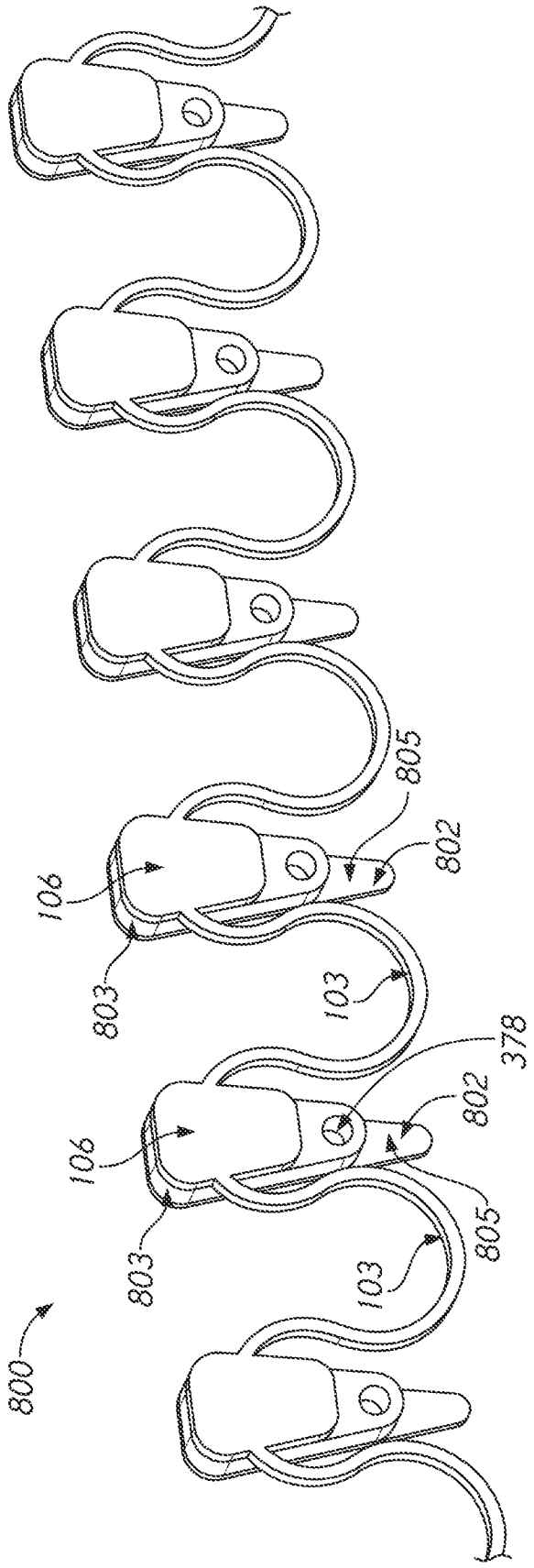

FIG. 15A

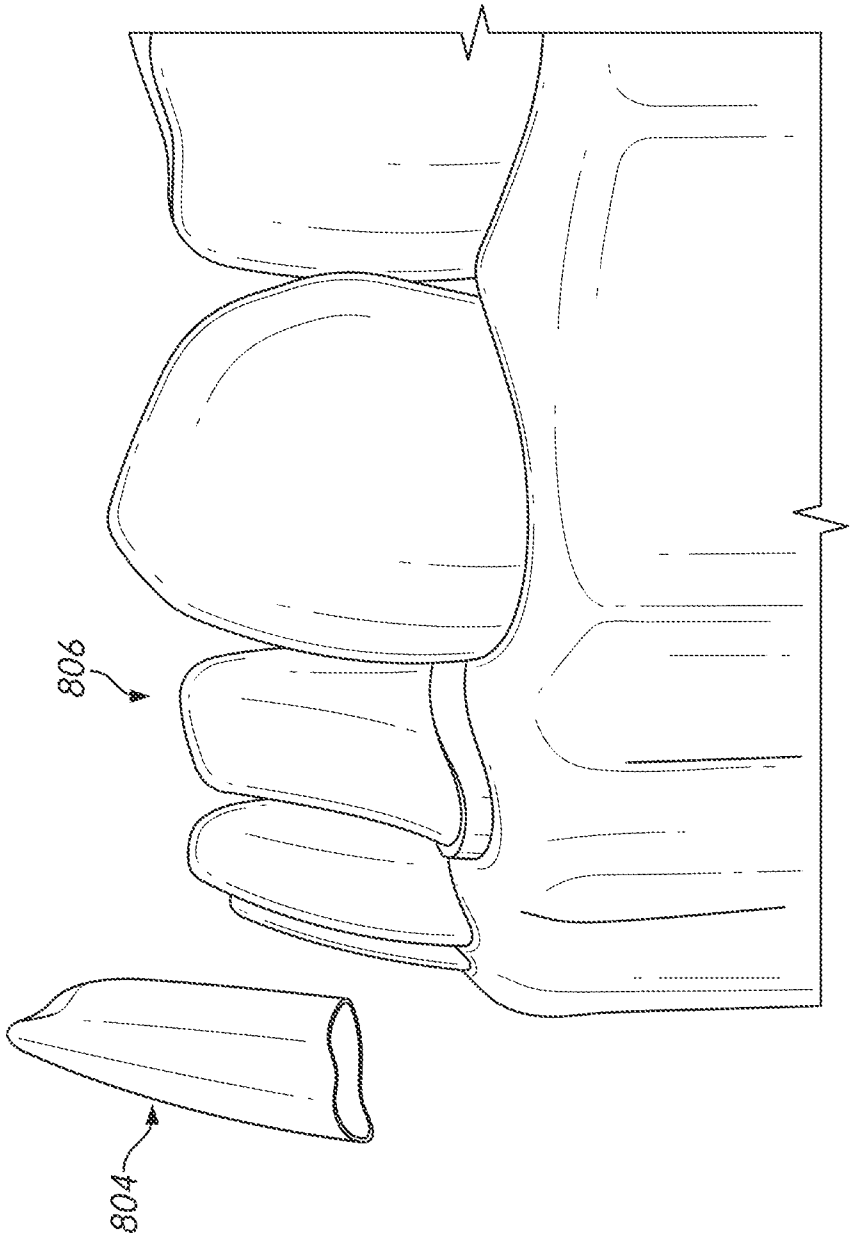

FIG. 15B

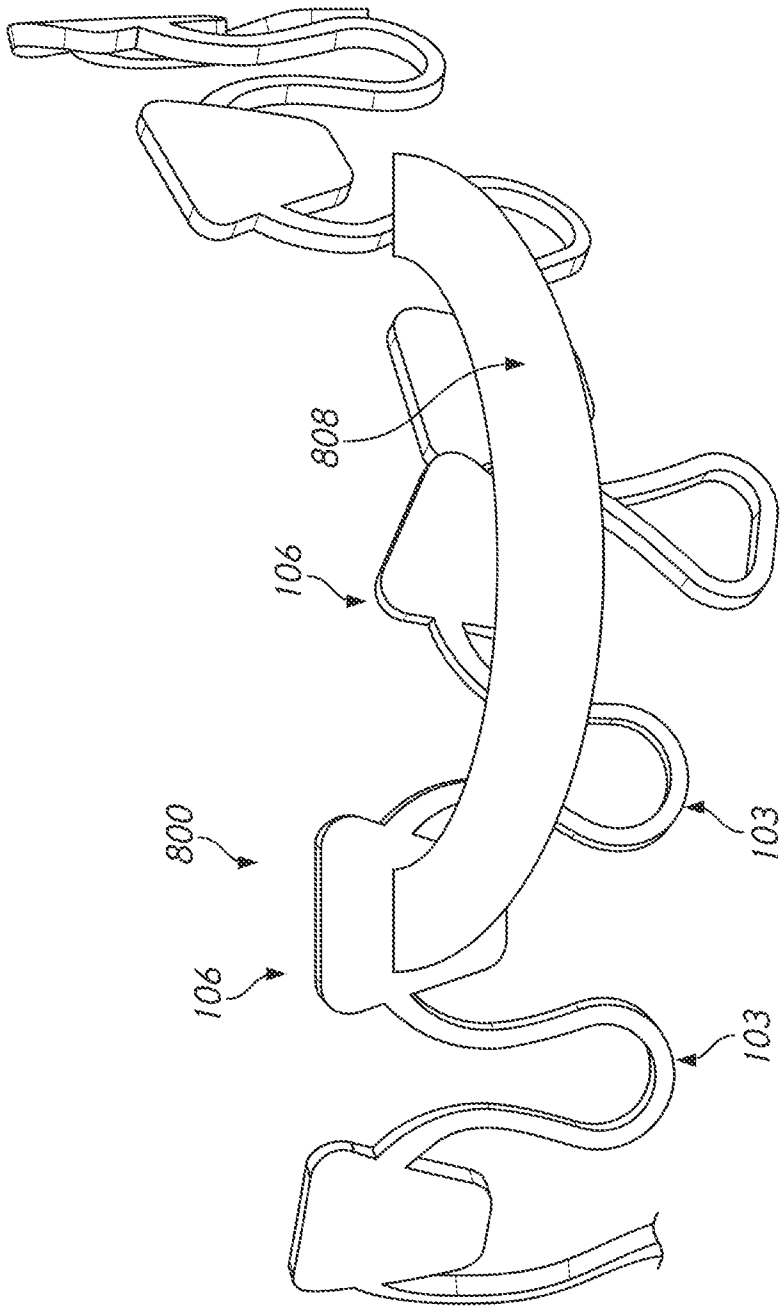

FIG. 15C

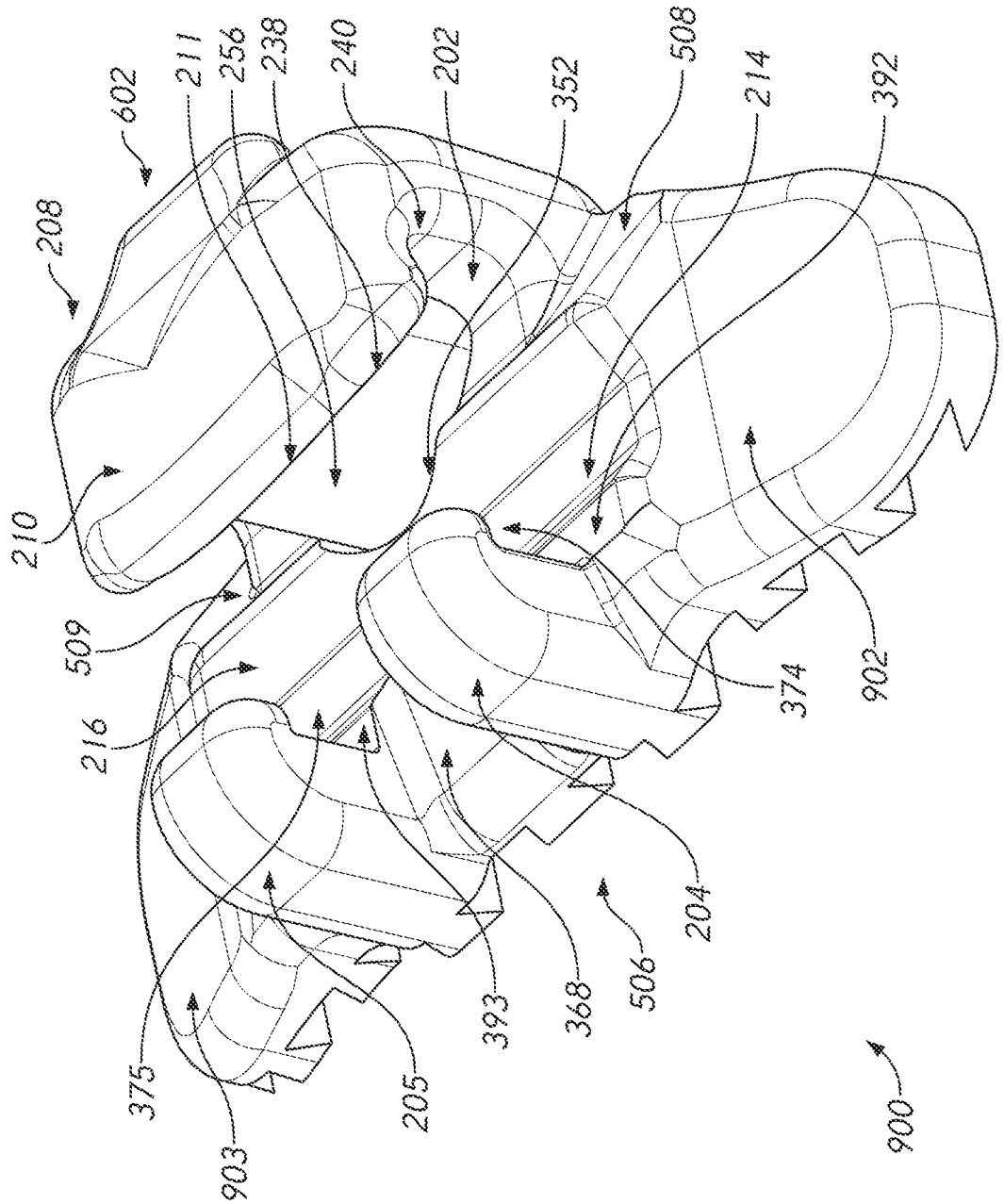
602
211
256
238
240
202
352
508
214
392
208
210
509
216
374
902
204
506
368
393
205
375
903
900

FIG. 16A

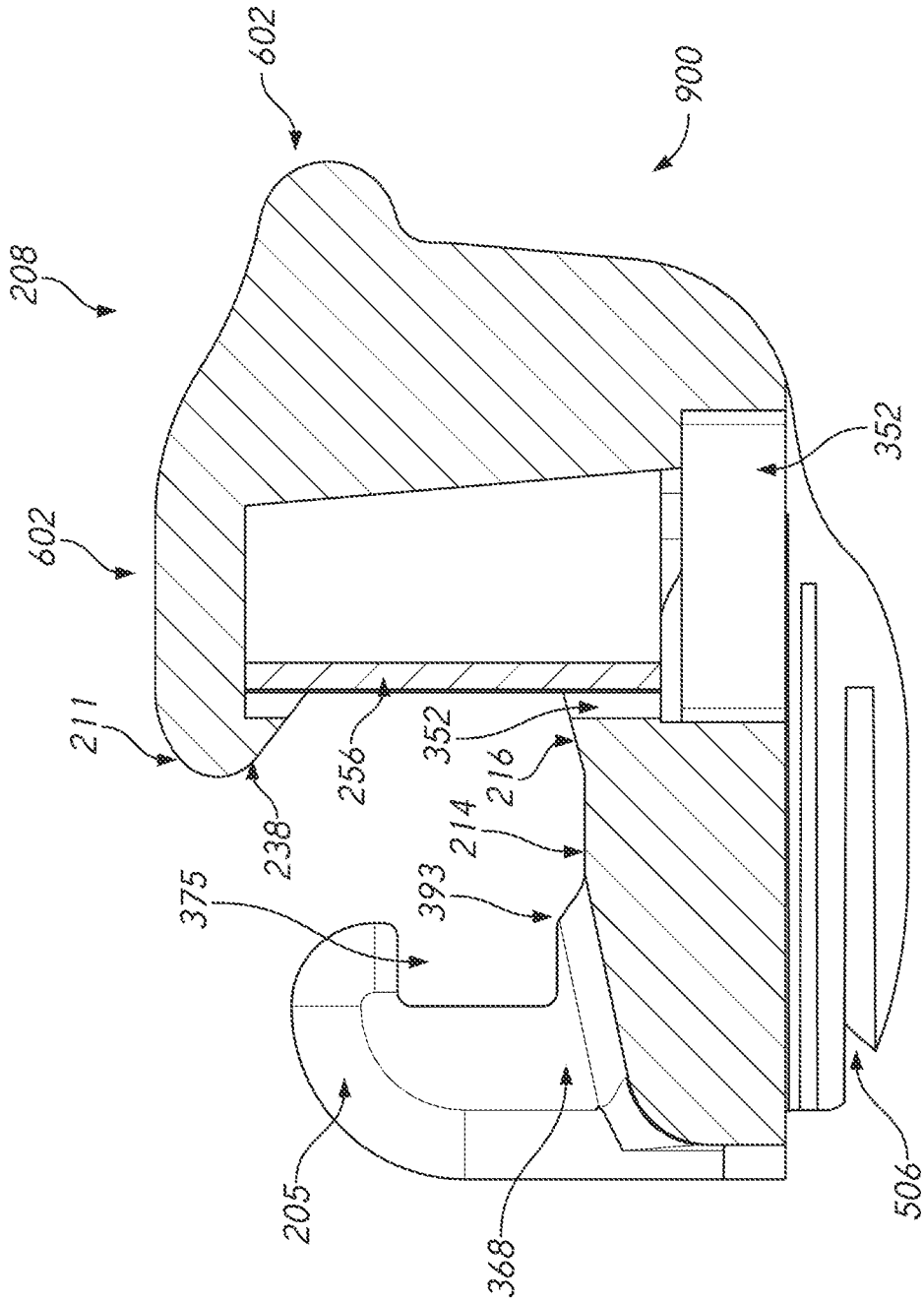

FIG. 16B

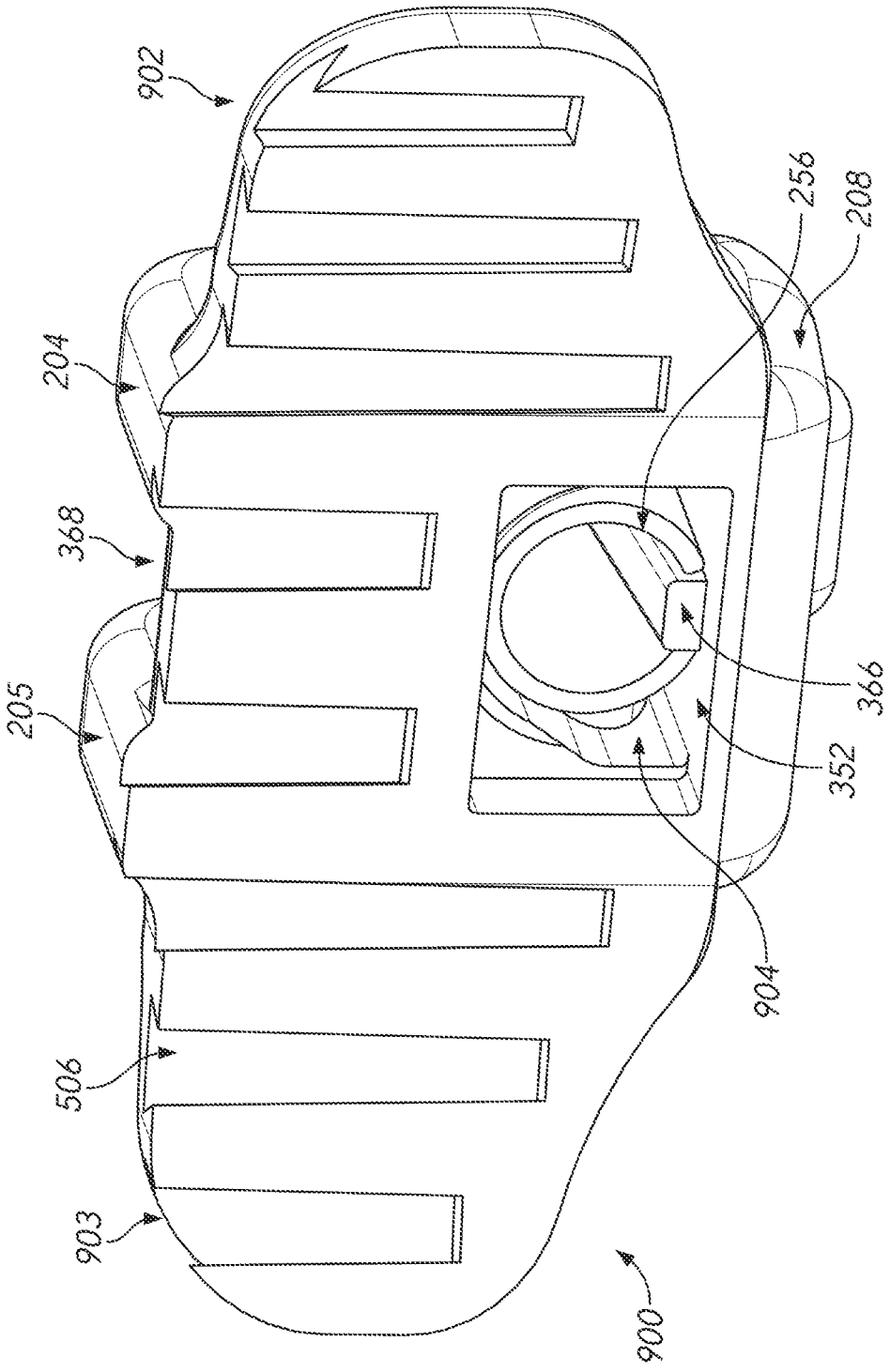

FIG. 16C

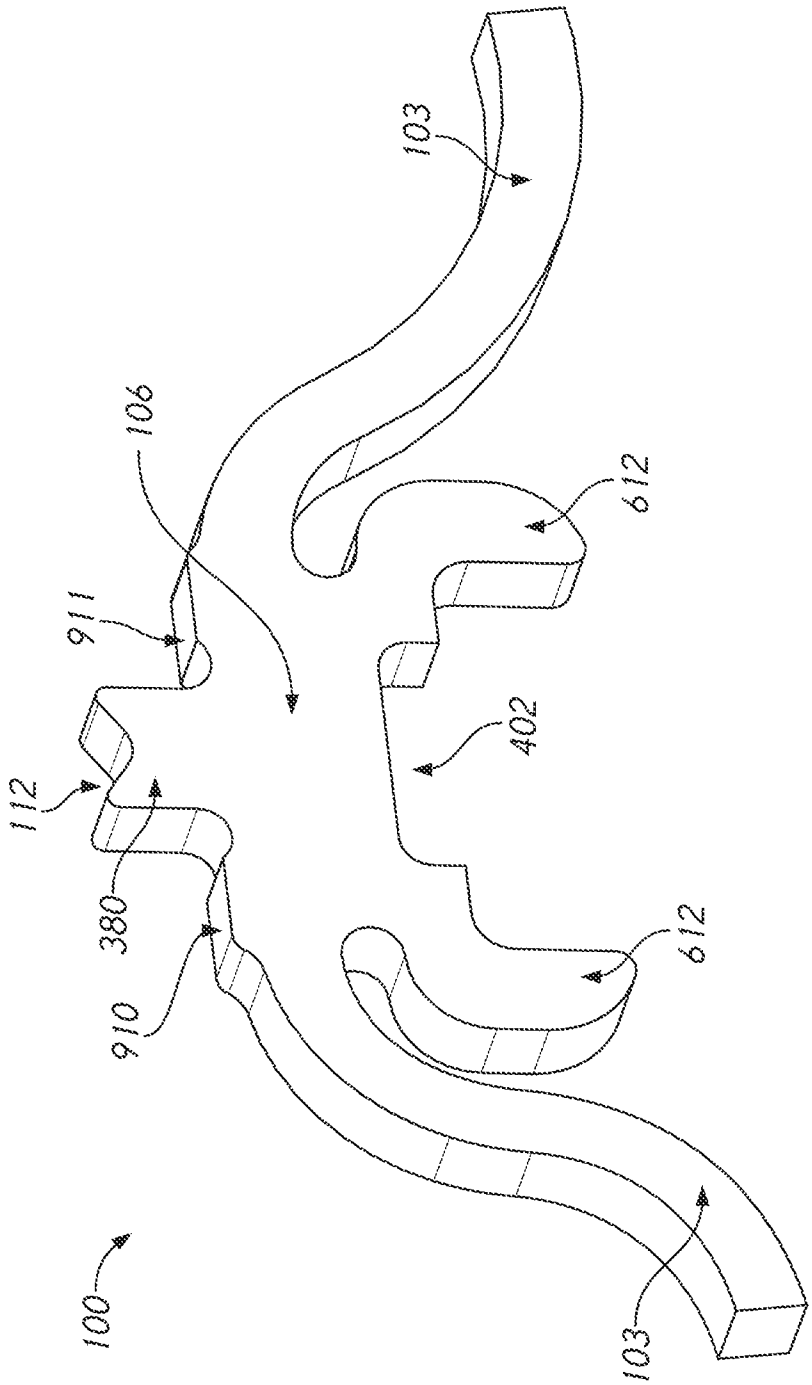

FIG. 16D

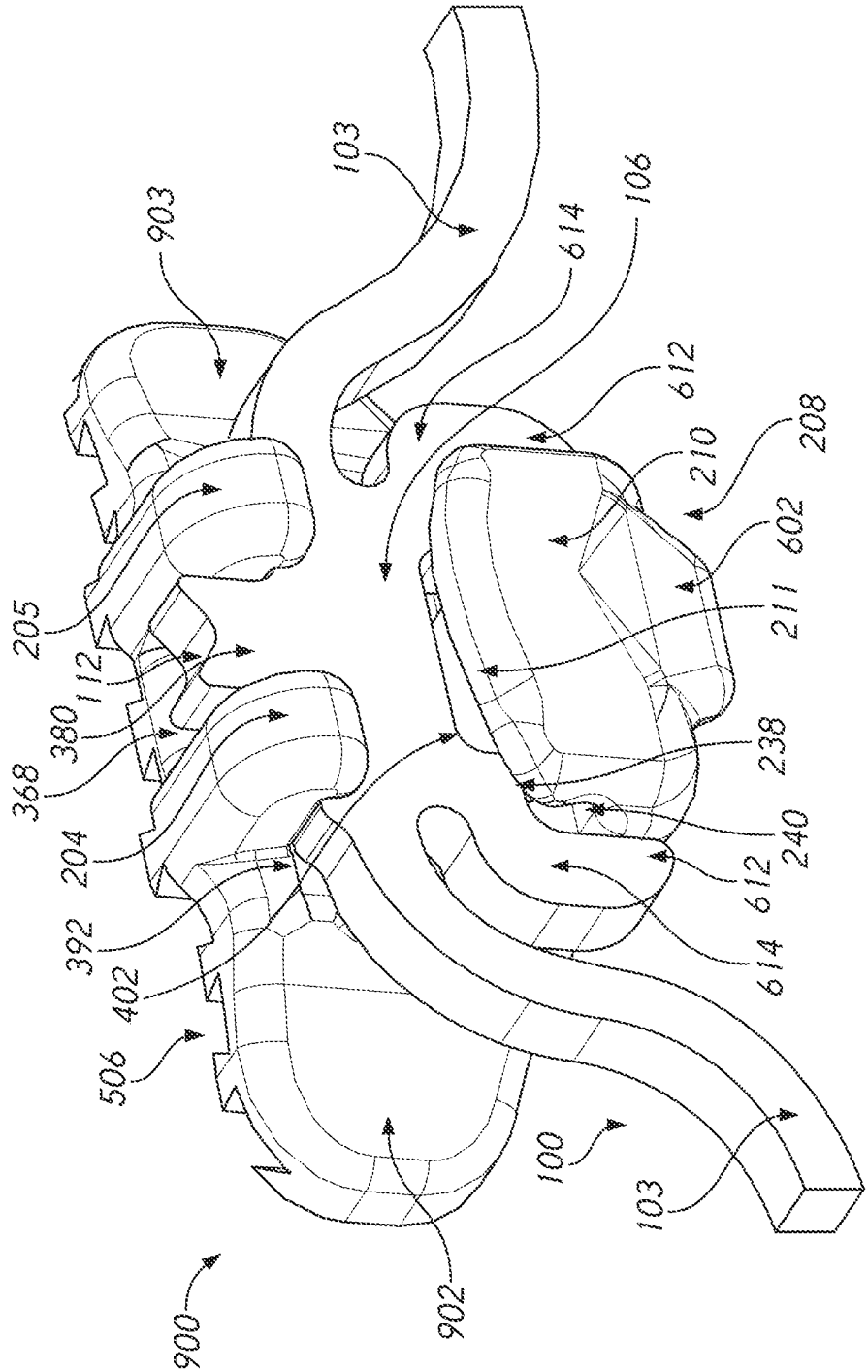
900
902
100
103
506
402
392
204
368
380
112
205
903
103
614
106
612
210
208
602
211
238
240
612
614

FIG. 16E

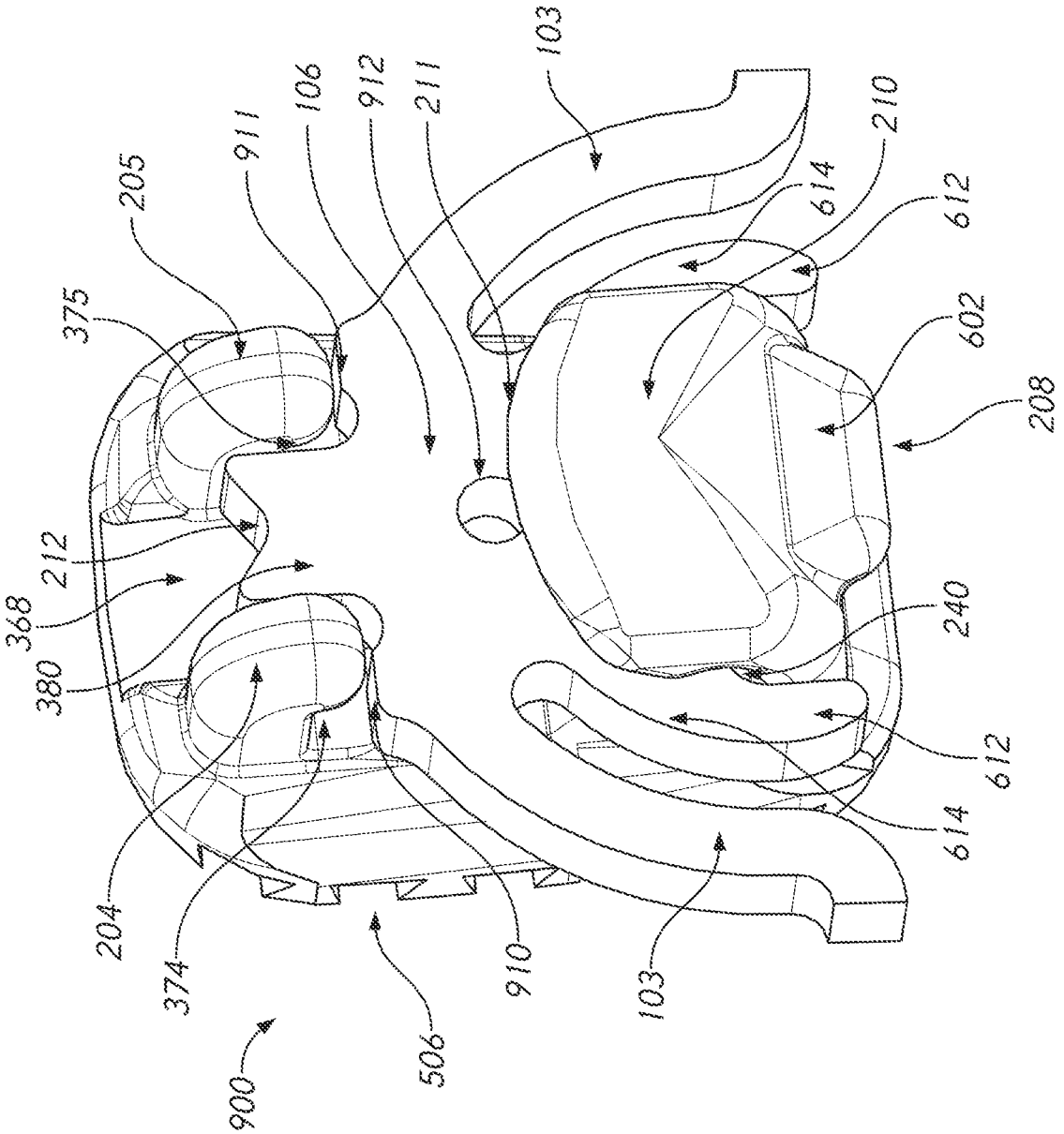
103
106
912
211
911
205
375
210
614
612
602
208
212
368
380
240
612
614
204
374
910
103
506
900

FIG. 17A

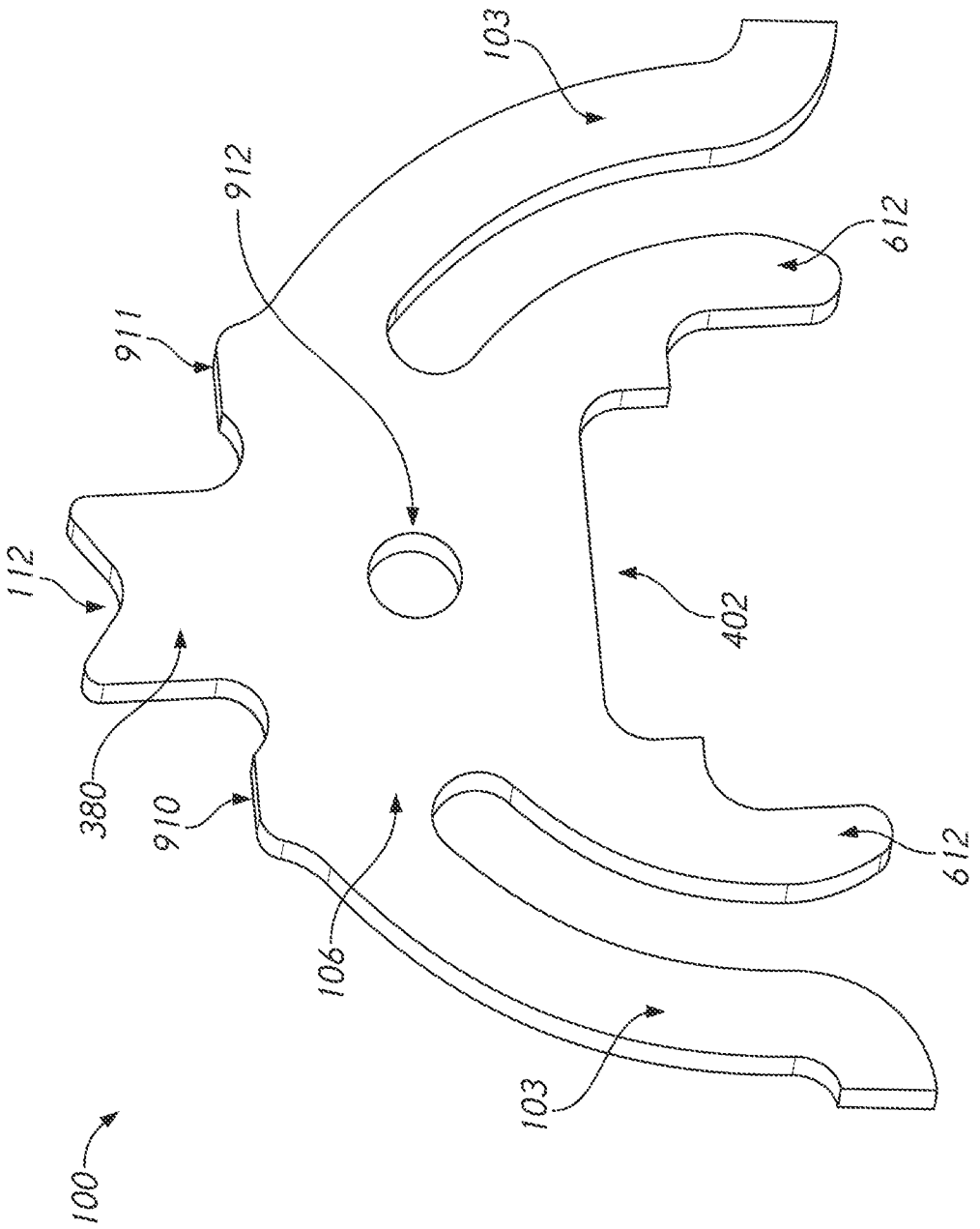

FIG. 17B

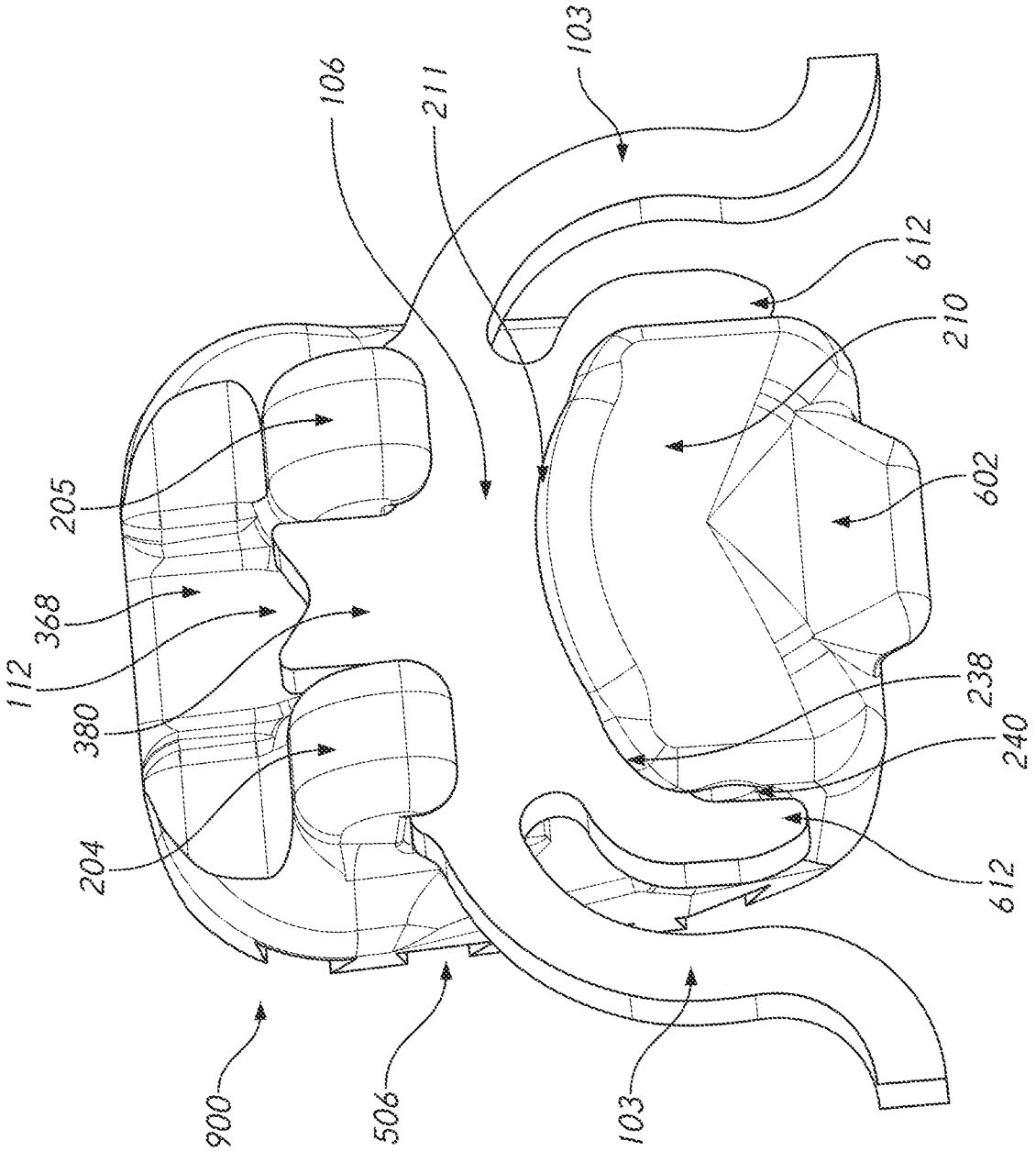
103
106
211
612
210
205
602
368
112
238
380
240
204
612
900
506
103

FIG. 18

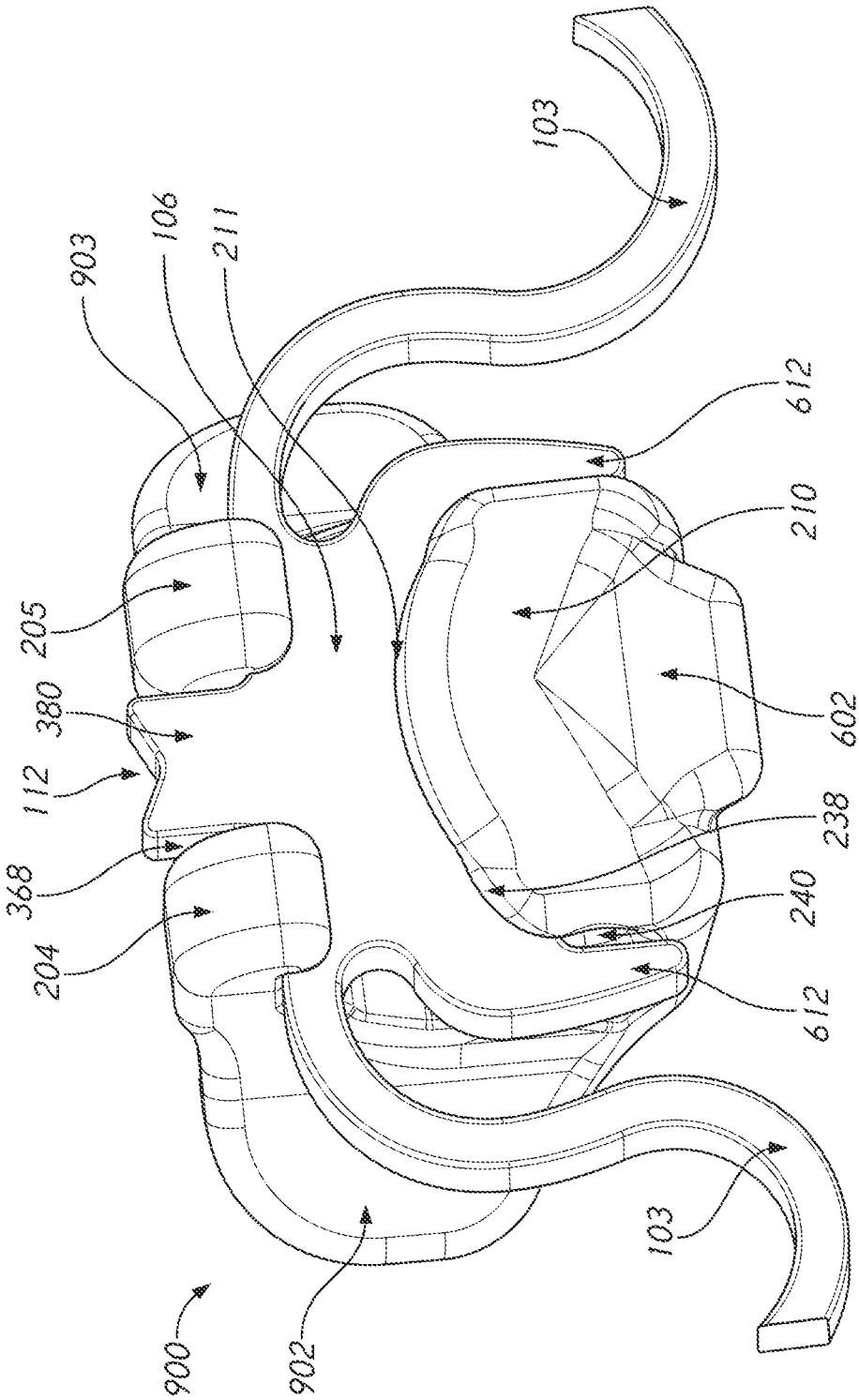
103
106
211
903
612
210
205
380
112
602
238
368
240
204
612
103
900
902

FIG. 19

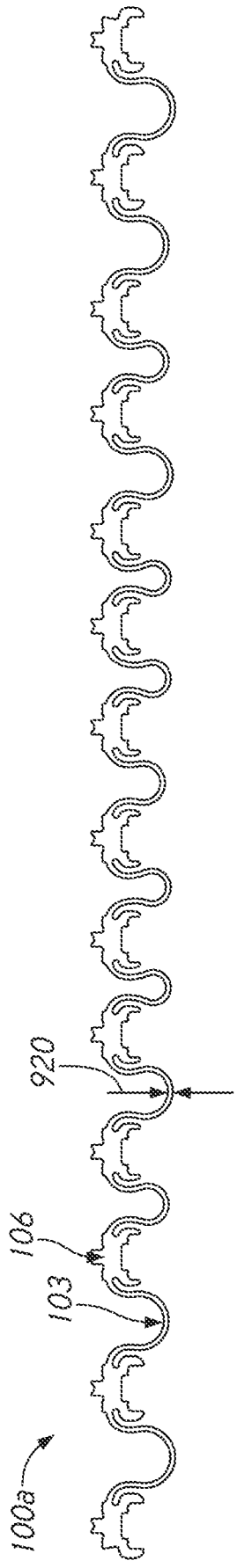

FIG. 20A

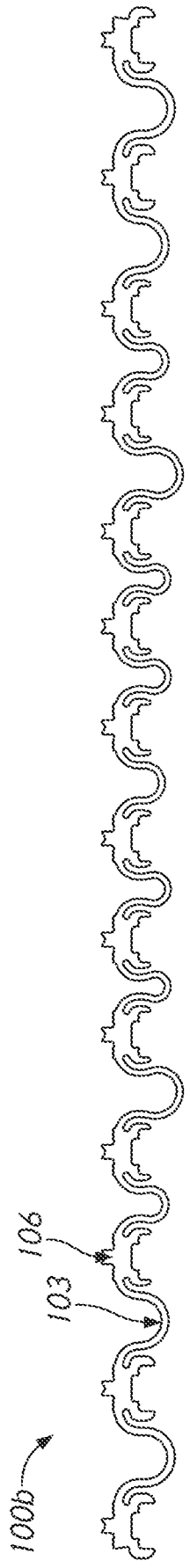

FIG. 20B

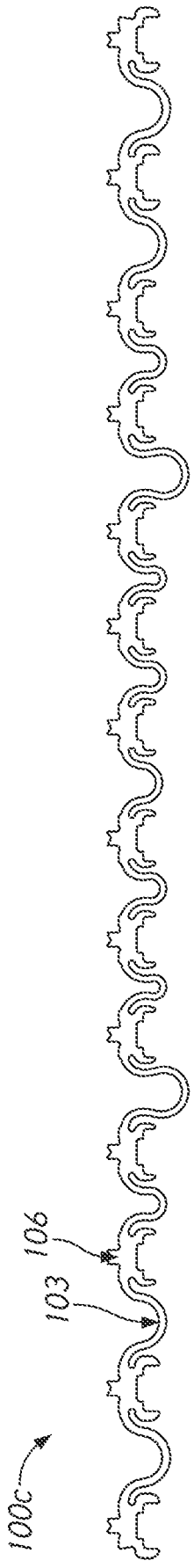

FIG. 20C

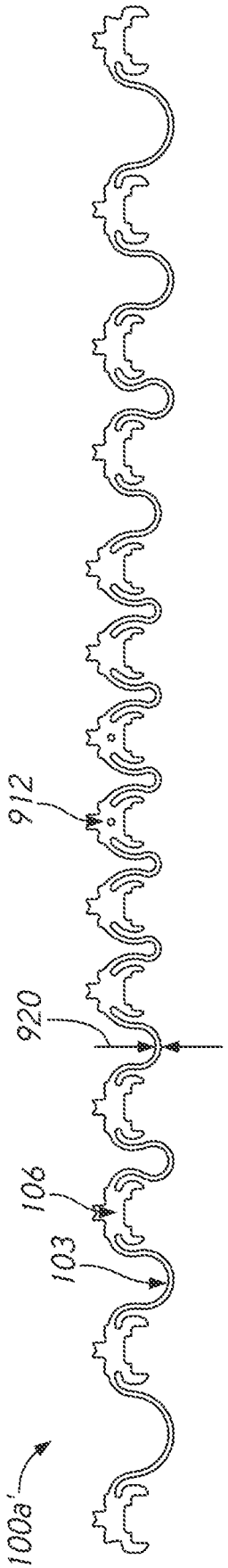

FIG. 21A

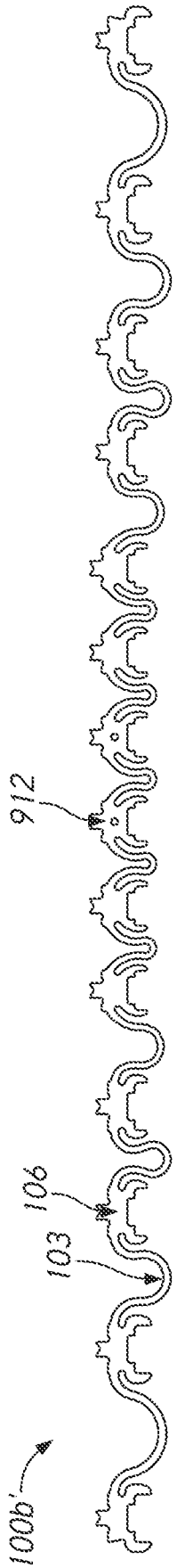

FIG. 21B

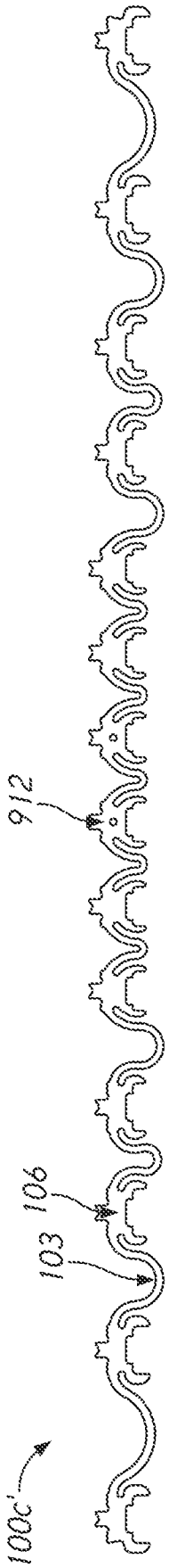

FIG. 21C

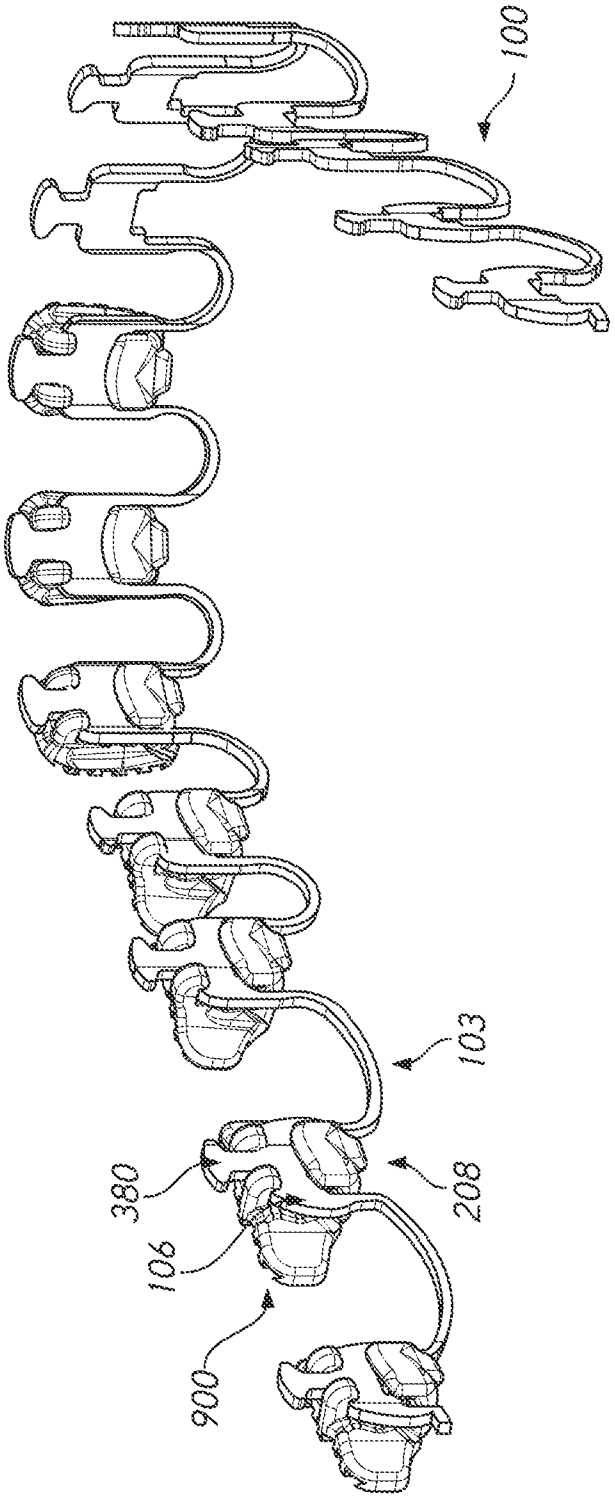

FIG. 22

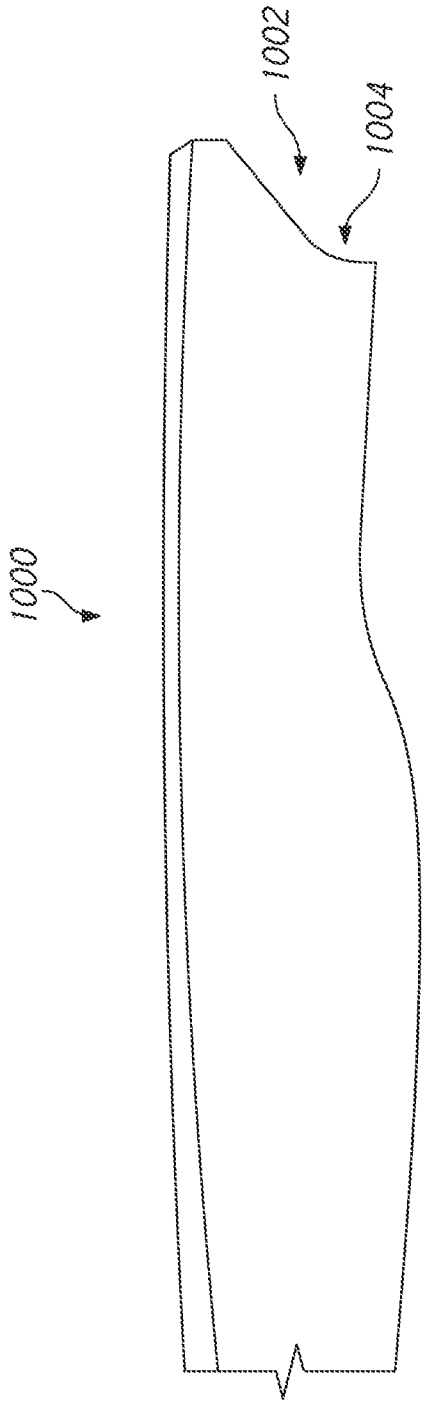

FIG. 23A

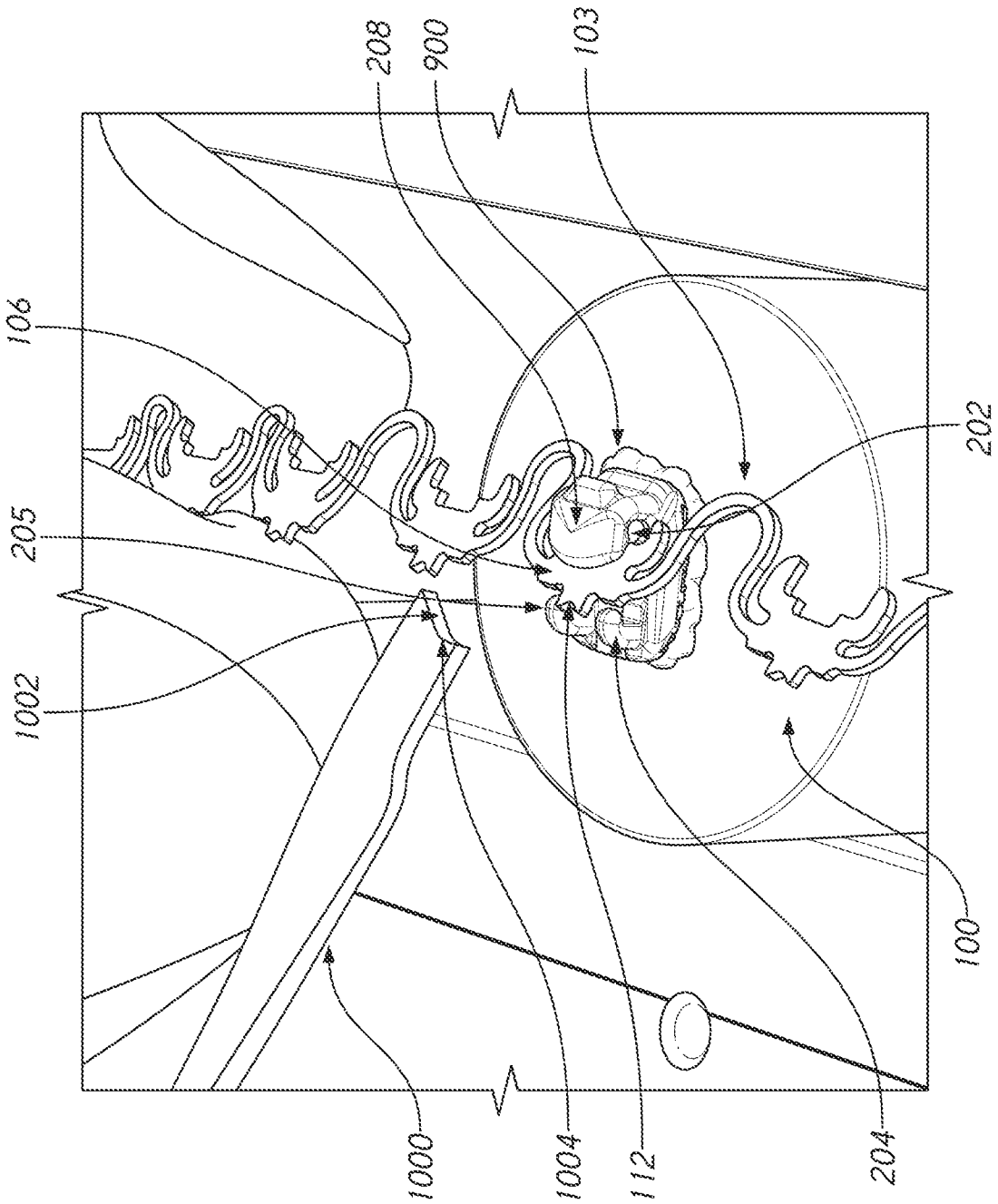

FIG. 23B

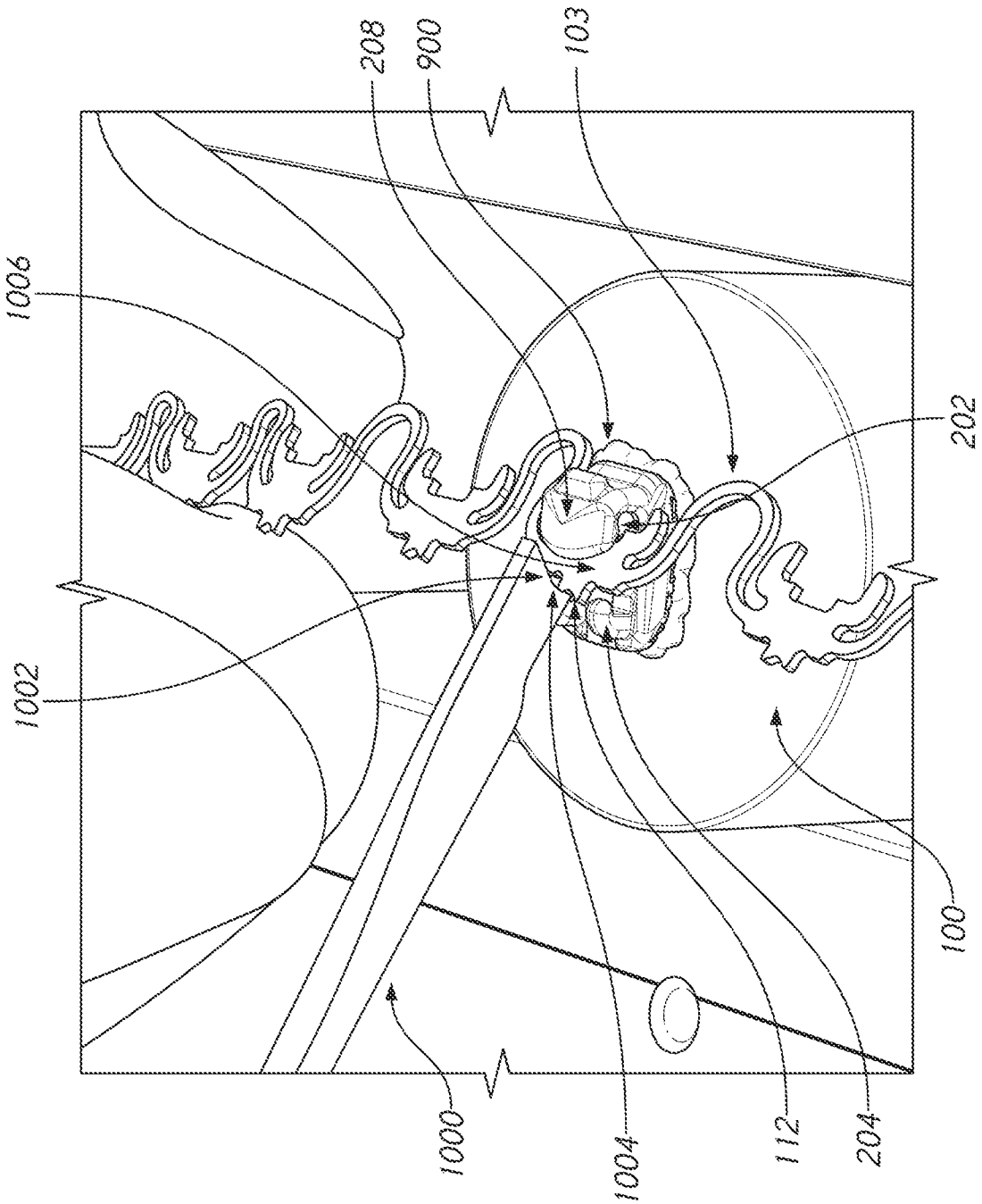

FIG. 23C

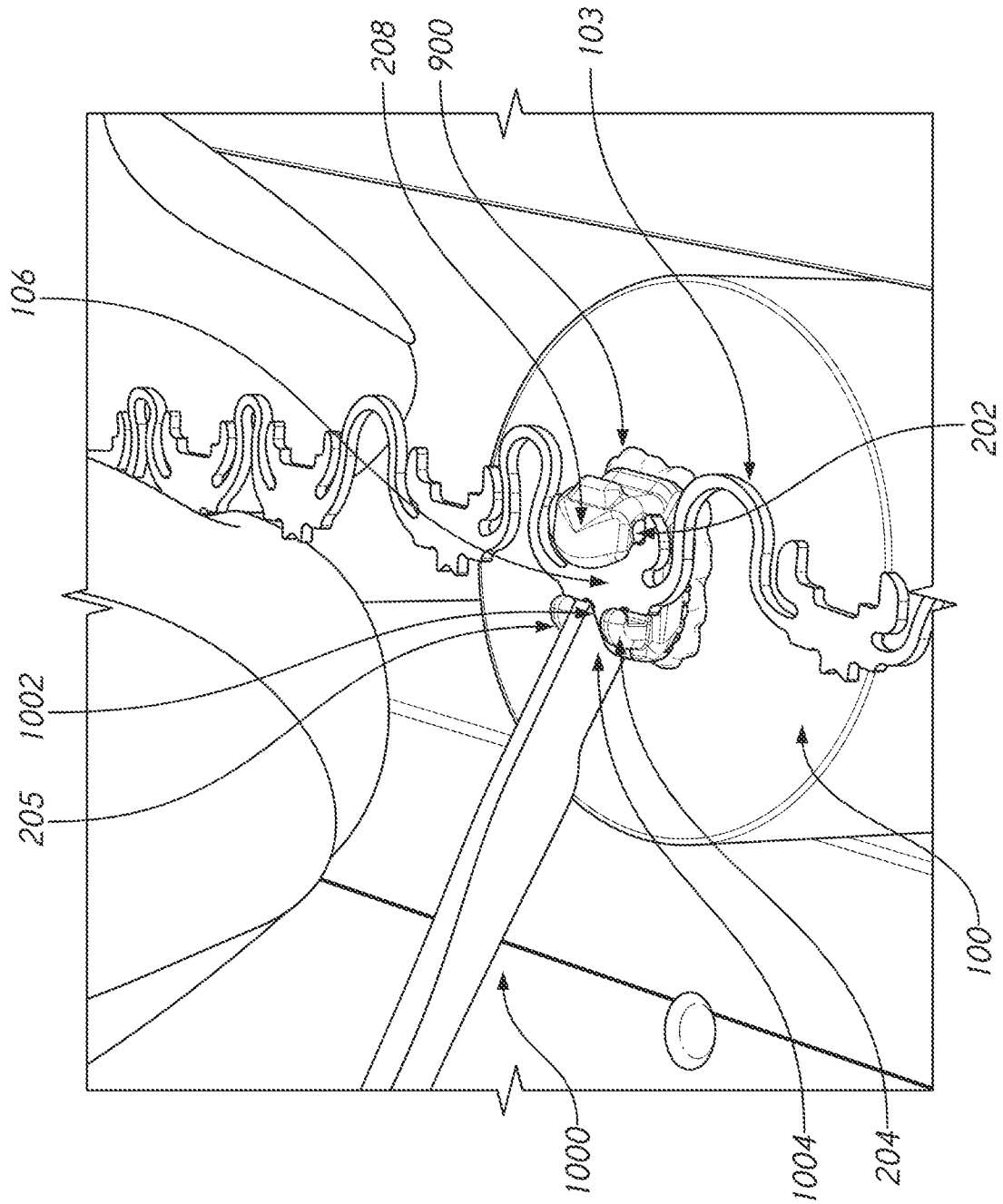

FIG. 23D

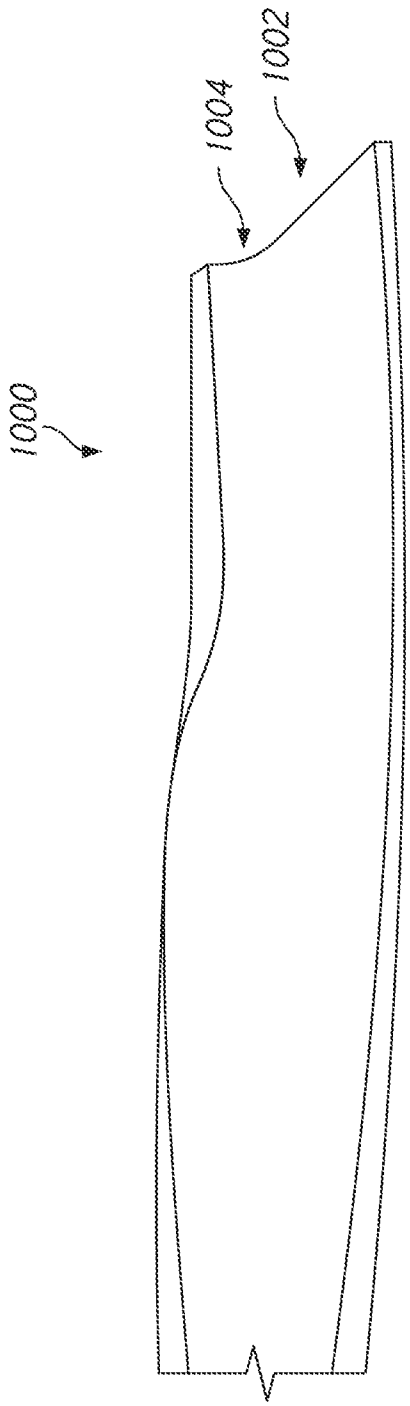

FIG. 23E

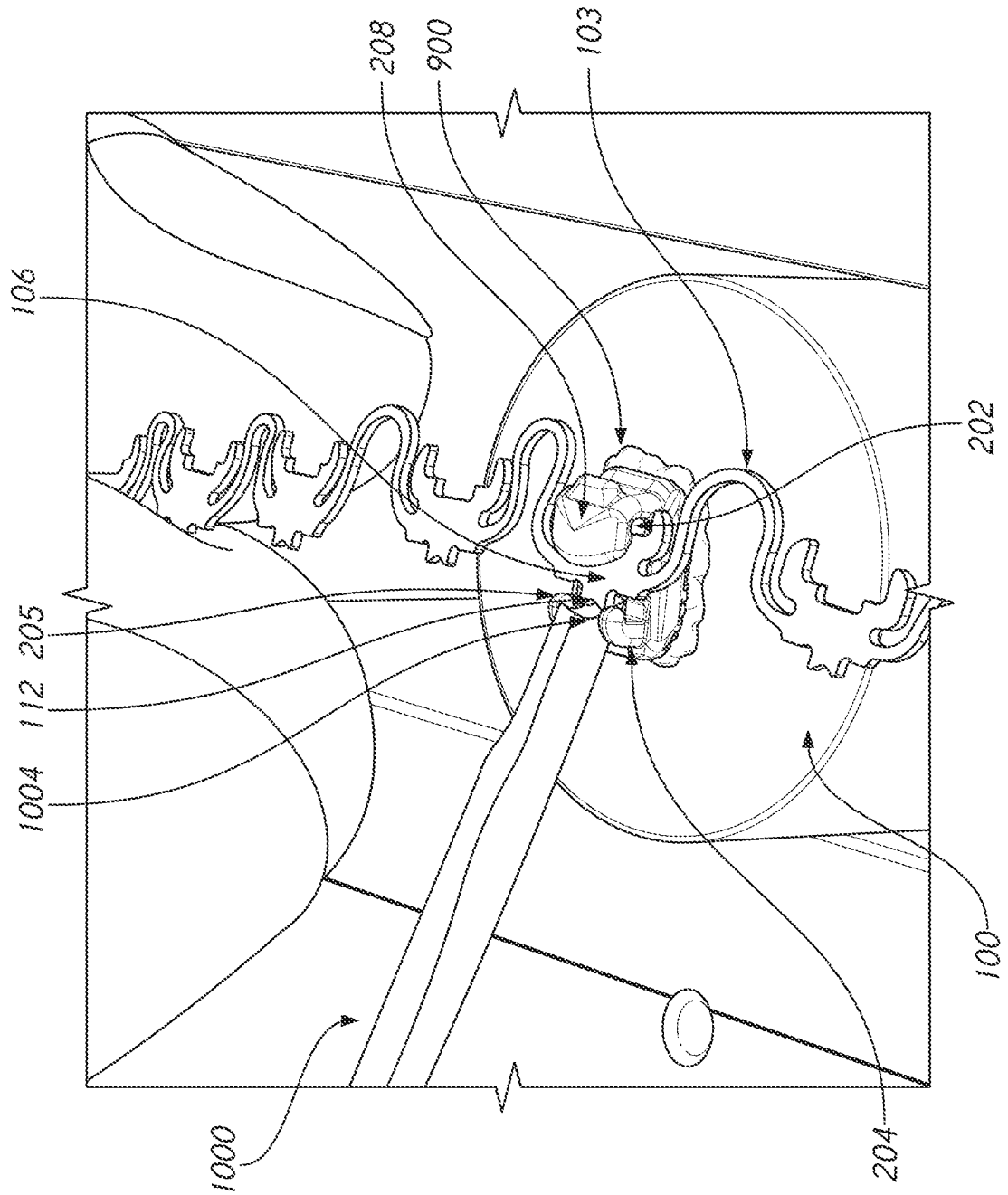

FIG. 23F

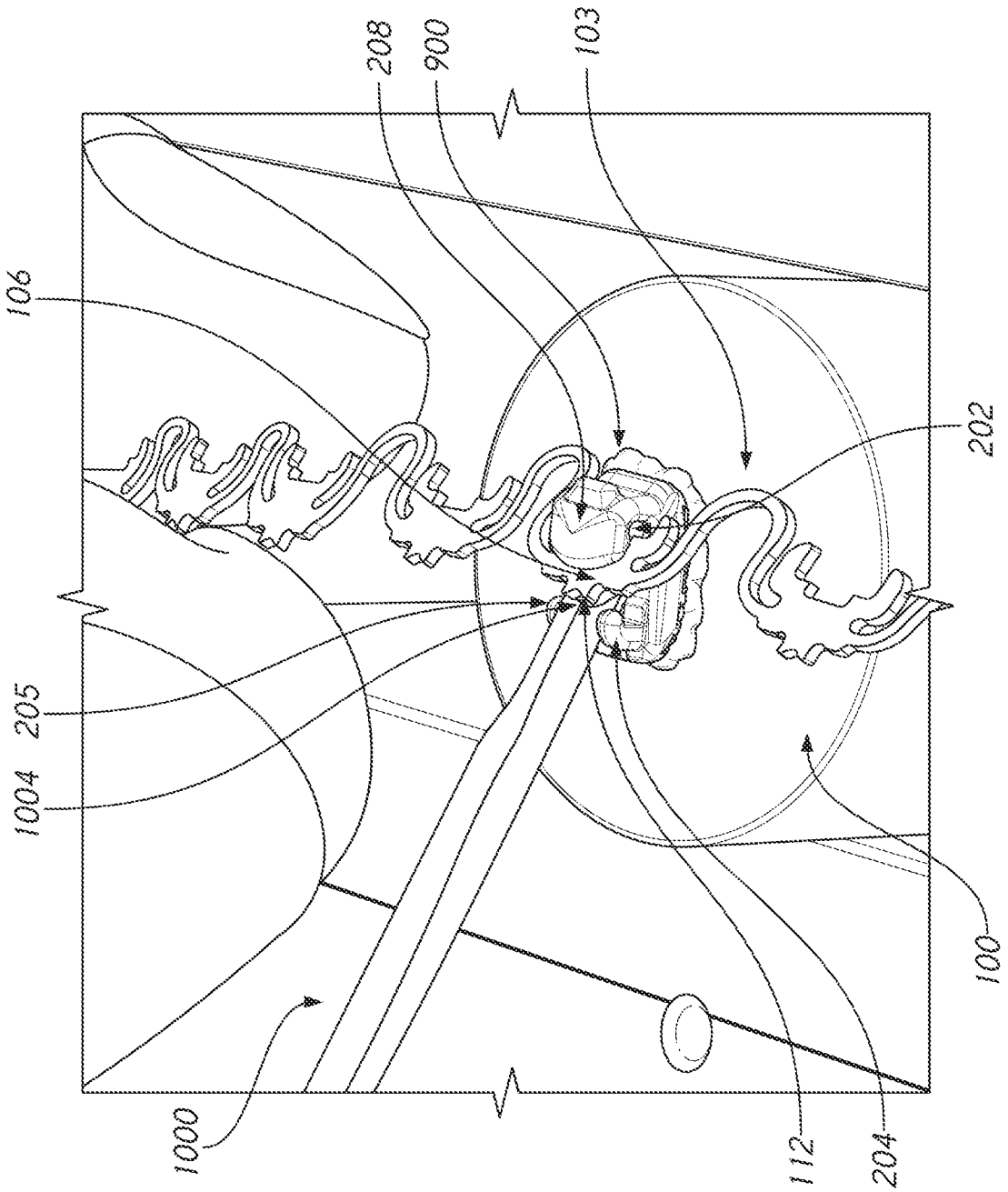

FIG. 23G

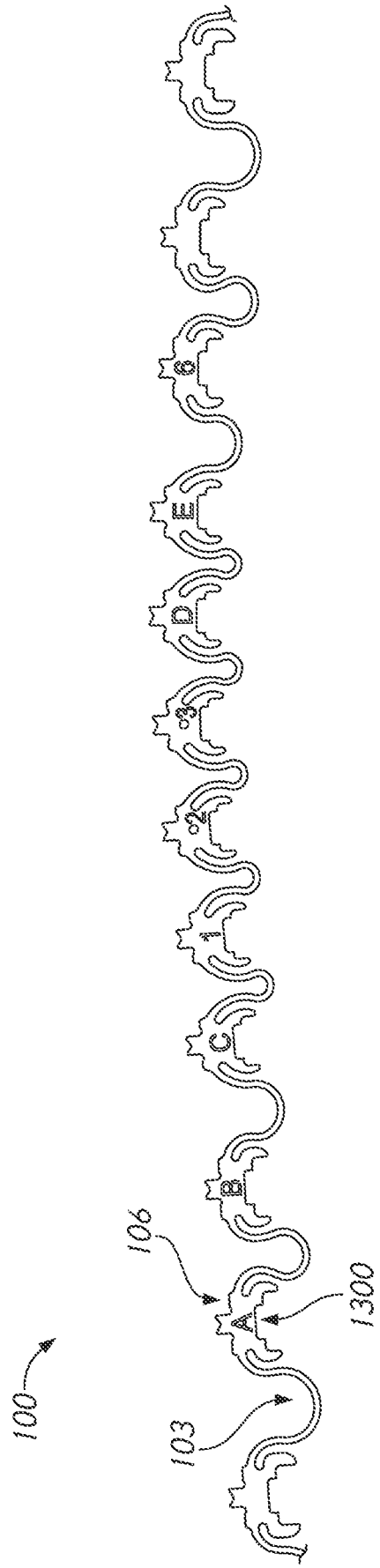

FIG. 24

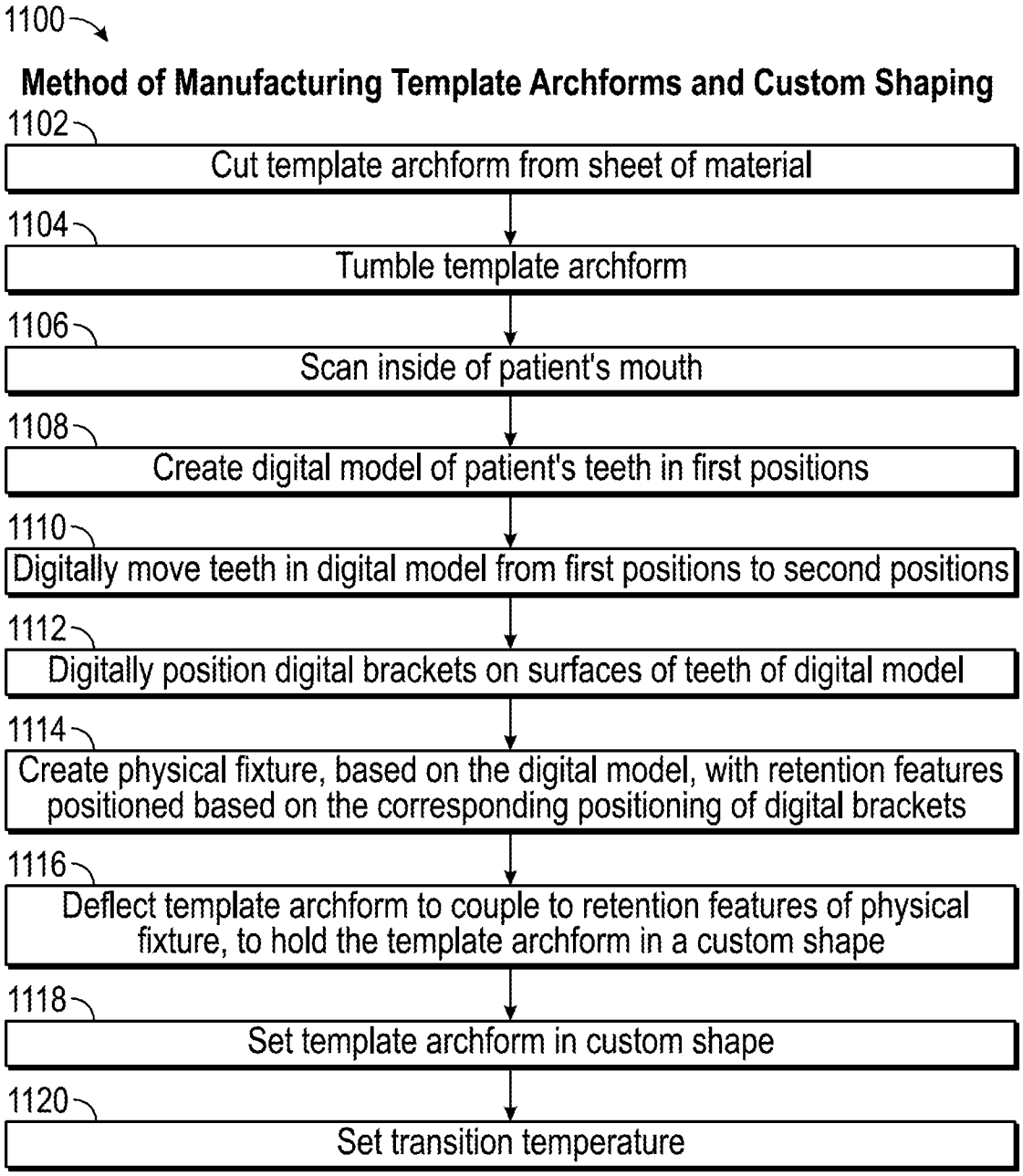
1100
Method of Manufacturing Template Archforms and Custom Shaping
1102
Cut template archform from sheet of material
1104
Tumble template archform
1106
Scan inside of patient's mouth
1108
Create digital model of patient's teeth in first positions
1110
Digitally move teeth in digital model from first positions to second positions
1112
Digitally position digital brackets on surfaces of teeth of digital model
1114
Create physical fixture, based on the digital model, with retention features positioned based on the corresponding positioning of digital brackets
1116
Deflect template archform to couple to retention features of physical fixture, to hold the template archform in a custom shape
1118
Set template archform in custom shape
1120
Set transition temperature

FIG. 25A

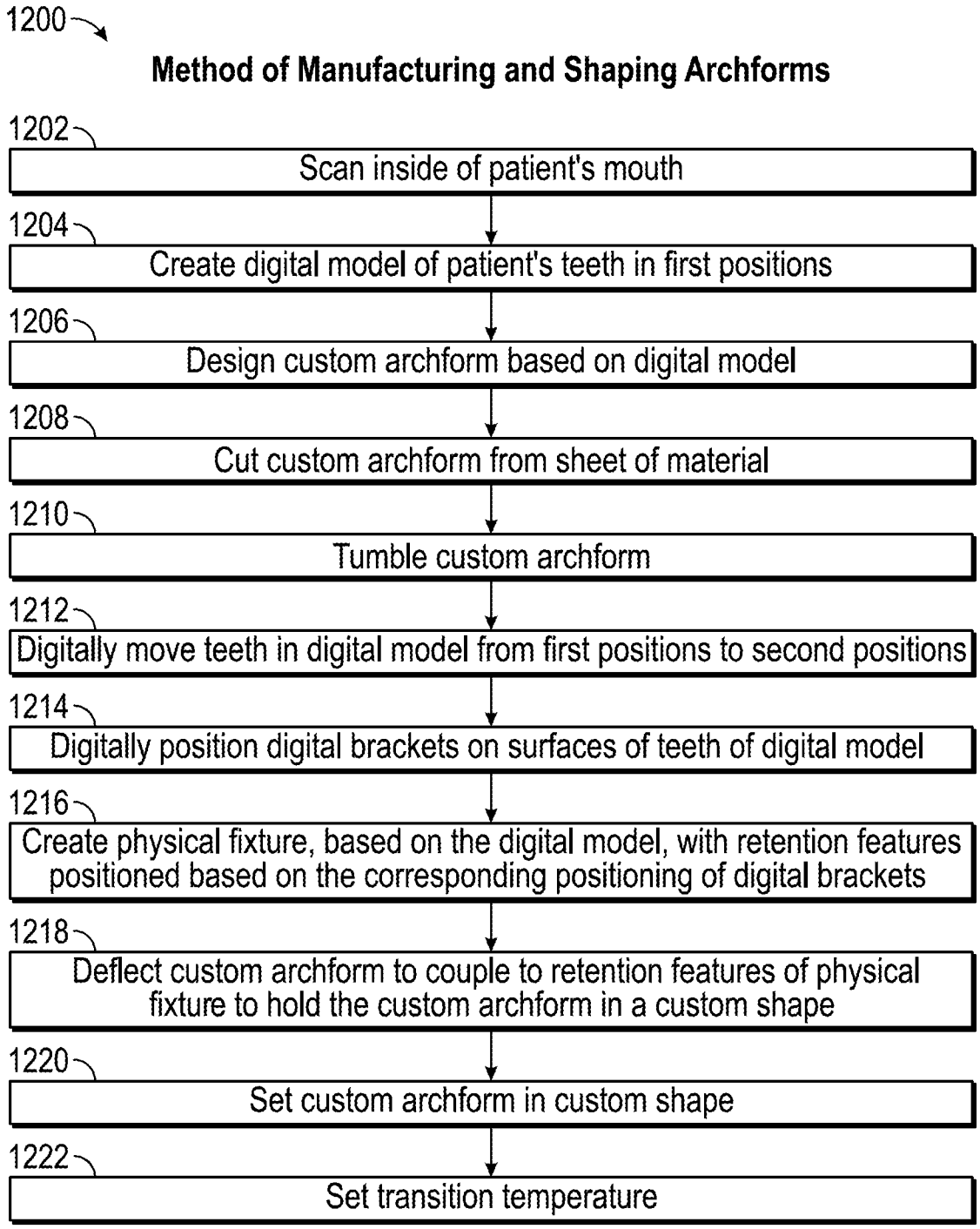
1200
Method of Manufacturing and Shaping Archforms
1202
Scan inside of patient's mouth
1204
Create digital model of patient's teeth in first positions
1206
Design custom archform based on digital model
1208
Cut custom archform from sheet of material
1210
Tumble custom archform
1212
Digitally move teeth in digital model from first positions to second positions
1214
Digitally position digital brackets on surfaces of teeth of digital model
1216
Create physical fixture, based on the digital model, with retention features positioned based on the corresponding positioning of digital brackets
1218
Deflect custom archform to couple to retention features of physical fixture to hold the custom archform in a custom shape
1220
Set custom archform in custom shape
1222
Set transition temperature

FIG. 25B

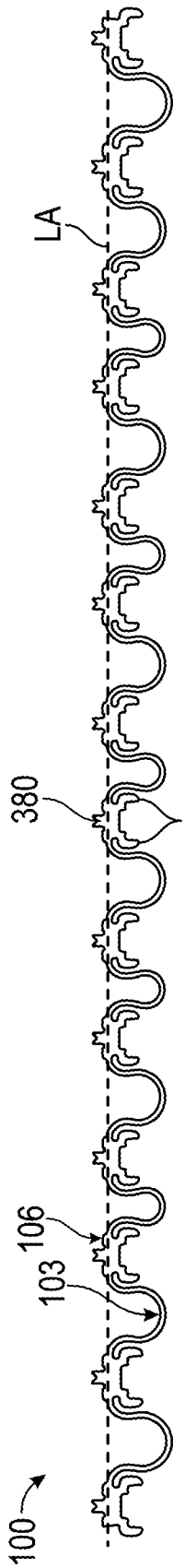

FIG. 26

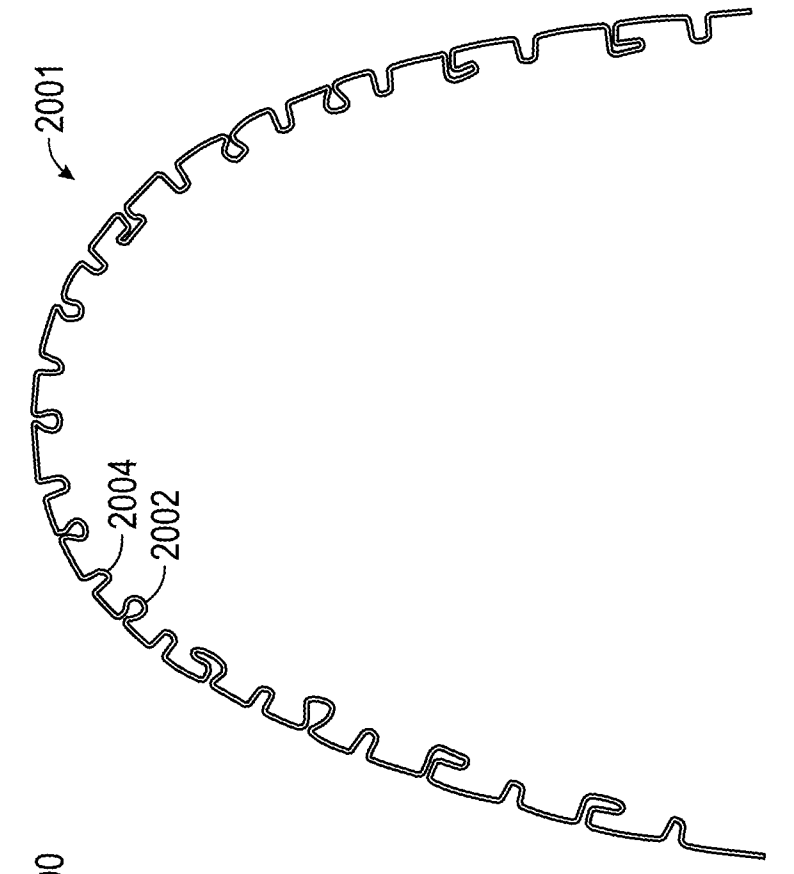

FIG. 27B

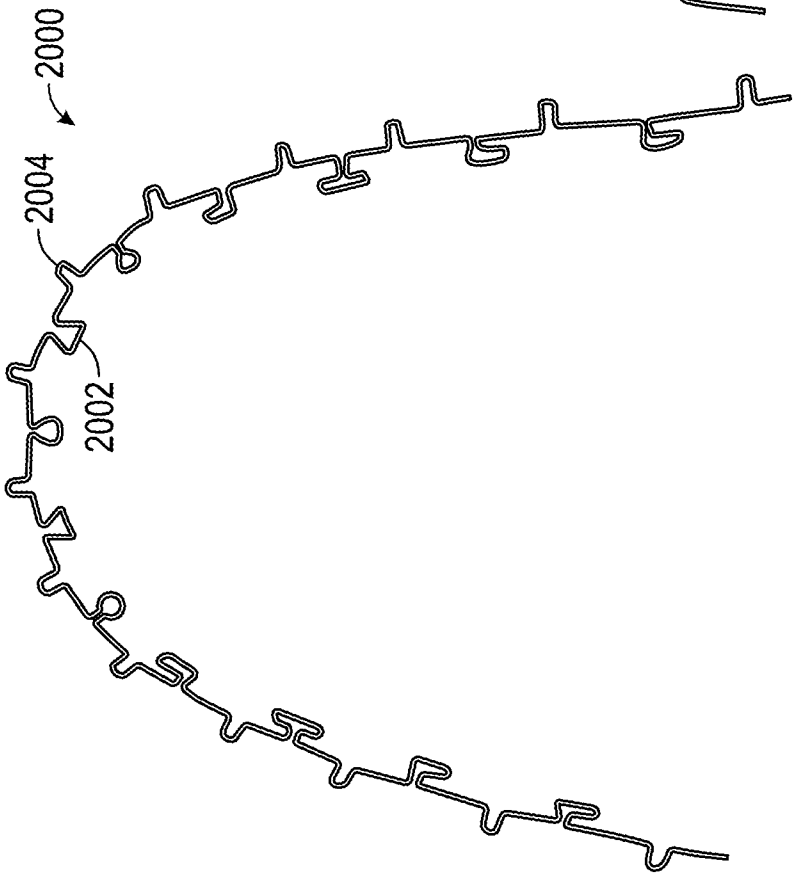

FIG. 27A

INTERNATIONAL SEARCH REPORT

International application No.
PCT/US2022/019619

A. CLASSIFICATION OF SUBJECT MATTER

IPC(8) - A61C 7/00; A61C 7/12; A61C 7/14; A61C 7/20; A61C 9/00; B33Y 10/00 (2022.01)
CPC - A61C 7/002; A61C 7/00; A61C 7/12; A61C 7/146; A61C 7/20; B33Y 80/00 (2022.05)

According to International Patent Classification (IPC) or to both national classification and IPC

B. FIELDS SEARCHED

Minimum documentation searched (classification system followed by classification symbols)
see Search History document

Documentation searched other than minimum documentation to the extent that such documents are included in the fields searched
see Search History document

Electronic data base consulted during the international search (name of data base and, where practicable, search terms used)
see Search History document

C. DOCUMENTS CONSIDERED TO BE RELEVANT

Category*	Citation of document, with indication, where appropriate, of the relevant passages	Relevant to claim No.
X — Y	US 2002/0006597 A1 (ANDREIKO et al) 17 January 2002 (17.01.2002) entire document	1, 2, 14, 16, 17 --- 3, 18
Y	US 2020/0146791 A1 (IVOCLAR VIVADENT AG) 14 May 2020 (14.05.2020) entire document	3, 18
A	US 2002/0010568 A1 (RUBBERT et al) 24 January 2002 (24.01.2002) entire document	1-3, 14, 16-18
A	US 2020/0352765 A1 (LIN) 12 November 2020 (12.11.2020) entire document	1-3, 14, 16-18
A	US 2019/0365508 A1 (UNIVERSITY OF SOUTHERN CALIFORNIA) 05 December 2019 (05.12.2019) entire document	1-3, 14, 16-18
A	WO 2001/080761 A2 (ORAMETRIX INC) 01 November 2001 (01.11.2001) entire document	1-3, 14, 16-18

☐ Further documents are listed in the continuation of Box C. ☐ See patent family annex.

* Special categories of cited documents:
"A" document defining the general state of the art which is not considered to be of particular relevance
"D" document cited by the applicant in the international application
"E" earlier application or patent but published on or after the international filing date
"L" document which may throw doubts on priority claim(s) or which is cited to establish the publication date of another citation or other special reason (as specified)
"O" document referring to an oral disclosure, use, exhibition or other means
"P" document published prior to the international filing date but later than the priority date claimed
"T" later document published after the international filing date or priority date and not in conflict with the application but cited to understand the principle or theory underlying the invention
"X" document of particular relevance; the claimed invention cannot be considered novel or cannot be considered to involve an inventive step when the document is taken alone
"Y" document of particular relevance; the claimed invention cannot be considered to involve an inventive step when the document is combined with one or more other such documents, such combination being obvious to a person skilled in the art
"&" document member of the same patent family

Date of the actual completion of the international search	Date of mailing of the international search report
26 June 2022	JUL 20 2022
Name and mailing address of the ISA/US Mail Stop PCT, Attn: ISA/US, Commissioner for Patents P.O. Box 1450, Alexandria, VA 22313-1450 Facsimile No. 571-273-8300	Authorized officer Taina Matos Telephone No. PCT Helpdesk: 571-272-4300

INTERNATIONAL SEARCH REPORT

International application No.
PCT/US2022/019619

Box No. II Observations where certain claims were found unsearchable (Continuation of item 2 of first sheet)

This international search report has not been established in respect of certain claims under Article 17(2)(a) for the following reasons:

1. ☐ Claims Nos.:
because they relate to subject matter not required to be searched by this Authority, namely:

2. ☐ Claims Nos.:
because they relate to parts of the international application that do not comply with the prescribed requirements to such an extent that no meaningful international search can be carried out, specifically:

3. ☒ Claims Nos.: 4-13, 15, 19-27, 31-33, 37-49, 54-64, 68, 70, 74-79
because they are dependent claims and are not drafted in accordance with the second and third sentences of Rule 6.4(a).

Box No. III Observations where unity of invention is lacking (Continuation of item 3 of first sheet)

This International Searching Authority found multiple inventions in this international application, as follows:

See extra sheet(s).

1. ☐ As all required additional search fees were timely paid by the applicant, this international search report covers all searchable claims.

2. ☐ As all searchable claims could be searched without effort justifying additional fees, this Authority did not invite payment of additional fees.

3. ☐ As only some of the required additional search fees were timely paid by the applicant, this international search report covers only those claims for which fees were paid, specifically claims Nos.:

4. ☒ No required additional search fees were timely paid by the applicant. Consequently, this international search report is restricted to the invention first mentioned in the claims; it is covered by claims Nos.:

1-3, 14, 16-18

Remark on Protest

☐ The additional search fees were accompanied by the applicant's protest and, where applicable, the payment of a protest fee.

☐ The additional search fees were accompanied by the applicant's protest but the applicable protest fee was not paid within the time limit specified in the invitation.

☐ No protest accompanied the payment of additional search fees.

Continued from Box No. III Observations where unity of invention is lacking

This application contains the following inventions or groups of inventions which are not so linked as to form a single general inventive concept under PCT Rule 13.1. In order for all inventions to be examined, the appropriate additional examination fees must be paid.

Group I, claims 1-3, 14 and 16-18, is drawn to a method of forming a custom nonplanar archform, the method comprising: cutting a template archform from a sheet of material, the template archform configured to be suitable for use in treatment plans for a percentage of a population.

Group II, claims 28-30, is drawn to an archform configured to follow at least a portion of a dental arch of a patient, the archform comprising: a longitudinal axis; a plurality of bracket connectors, each of the bracket connectors comprising: a buccal surface and a lingual surface.

Group III, claims 34-36, 50-53, 65-67, 69, 71-73 and 80-83, is drawn to an archform configured to move teeth of a patient, the archform comprising a first phase when a temperature of the archform is at room temperature.

The inventions listed as Groups I, II and III do not relate to a single general inventive concept under PCT Rule 13.1 because, under PCT Rule 13.2, they lack the same or corresponding special technical features for the following reasons: the special technical feature of the Group I invention: the template archform configured to be suitable for use in treatment plans for a percentage of a population; receiving scan data of teeth inside of a patient's mouth; creating a digital model of the teeth in first positions; digitally moving the teeth in the digital model from first positions to second positions; digitally positioning digital brackets on surfaces of the teeth in the digital model; creating a physical fixture, based at least partially on the digital model, with retention features positioned based on the corresponding positioning of the digital brackets in the digital model; deflecting the template archform to couple to the retention features of the physical fixture to hold the template archform in a custom nonplanar shape; and setting the template archform in the custom nonplanar shape as claimed therein is not present in the invention of Groups II and III. The special technical feature of the Group II invention: the archform comprising: a longitudinal axis; a plurality of bracket connectors, each of the bracket connectors comprising: a buccal surface and a lingual surface, the buccal surface and the lingual surface parallel to each other; and a portion extending in an occlusal direction or gingival direction away from the longitudinal axis; a plurality of interproximal segments, each of the interproximal segments disposed between a pair of bracket connectors of the plurality of bracket connectors; wherein the plurality of bracket connectors are configured to couple with corresponding brackets bonded to teeth of the patient such that the plurality of bracket connectors do not slide rotatably about the longitudinal axis relative to the brackets to facilitate torque control of the teeth of the patient as claimed therein is not present in the invention of Groups I or III. The special technical feature of the Group III invention: the archform comprising a first phase when a temperature of the archform is at room temperature and a second phase when the temperature of the archform is at body temperature as claimed therein is not present in the invention of Groups I or II.

Groups I, II and III lack unity of invention because even though the inventions of these groups require the technical feature of an archform configured to move teeth of a patient, this technical feature is not a special technical feature as it does not make a contribution over the prior art.

Specifically, US 2002/0006597 to Andreiko et al. teaches an archform configured to move teeth of a patient (Paras. [0031-0034]).

Since none of the special technical features of the Group I, II or III inventions are found in more than one of the inventions, unity of invention is lacking.