March 13, 1934. F. T. DENMAN 1,951,274

CARTON

Filed April 24, 1931 2 Sheets-Sheet 1

Fig. 1.

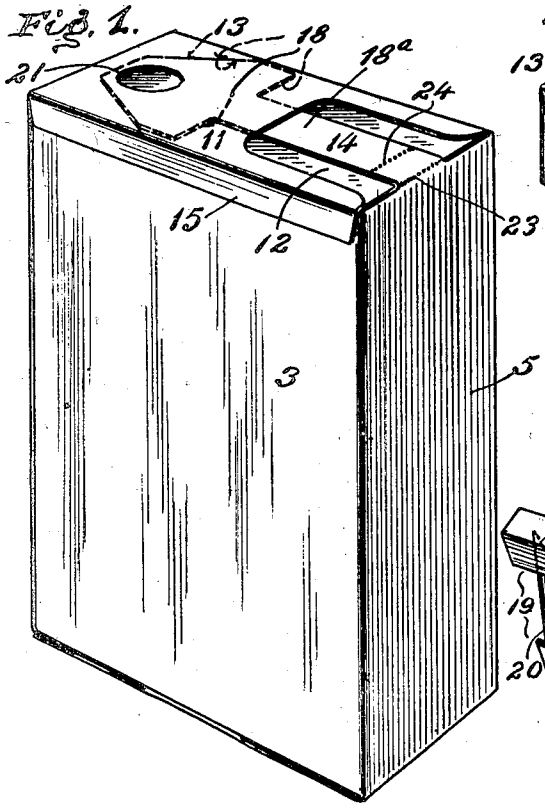

Fig. 2.

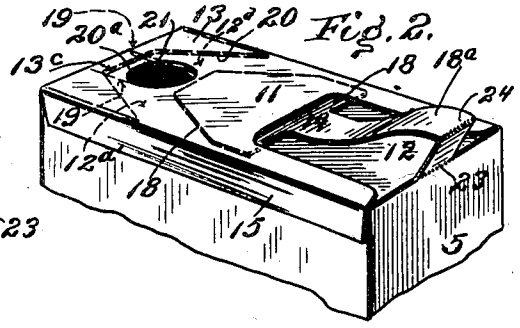

Fig. 3.

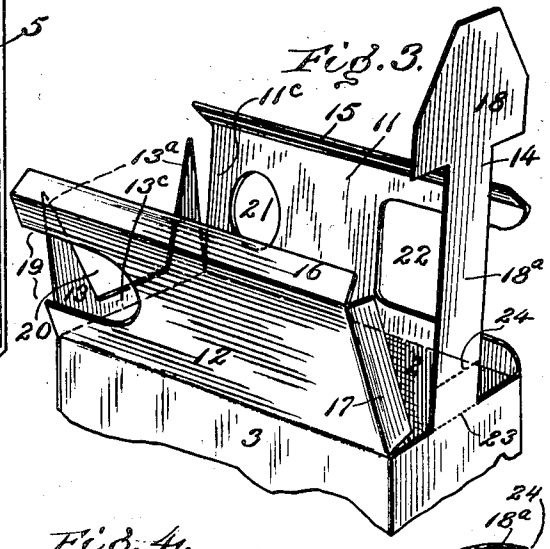

Fig. 4.

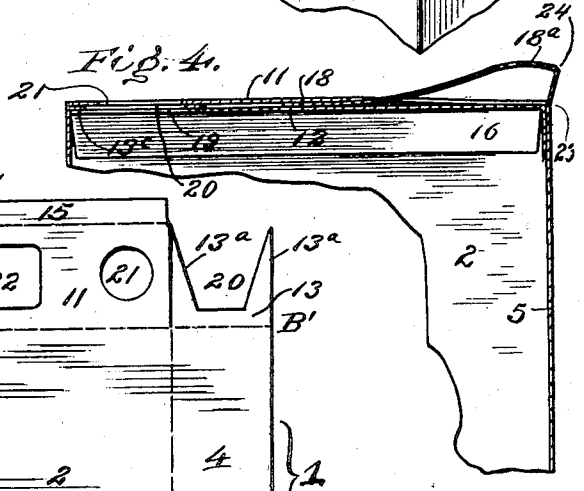

Fig. 5.

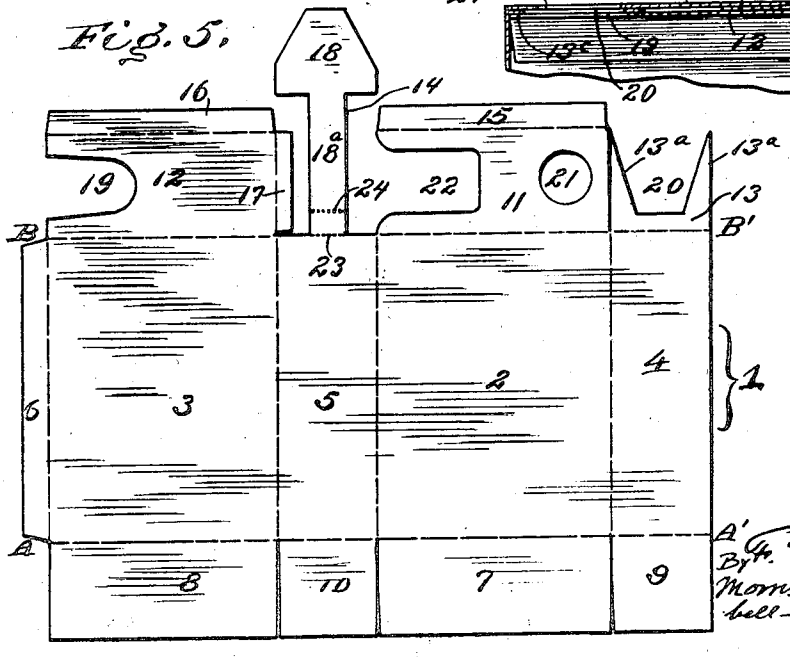

Inventor
By F. T. Denman
Morrison, Kennedy & Campbell
Attorneys

March 13, 1934. F. T. DENMAN 1,951,274

CARTON

Filed April 24, 1931 2 Sheets-Sheet 2

Fig. 6.

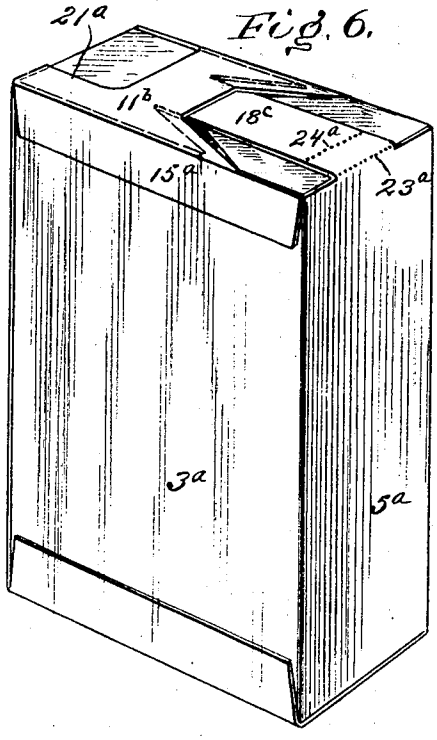

Fig. 7.

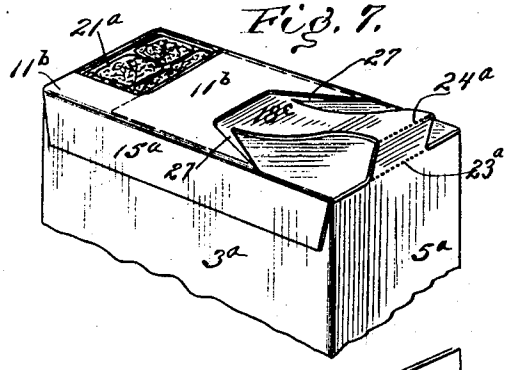

Fig. 8.

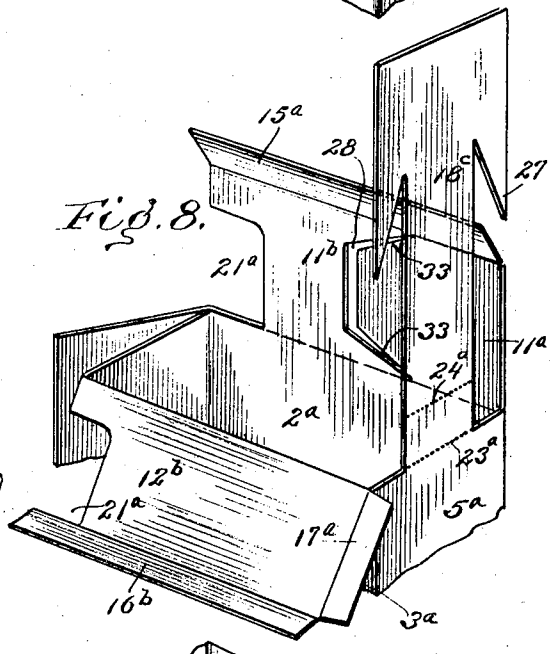

Fig. 10.

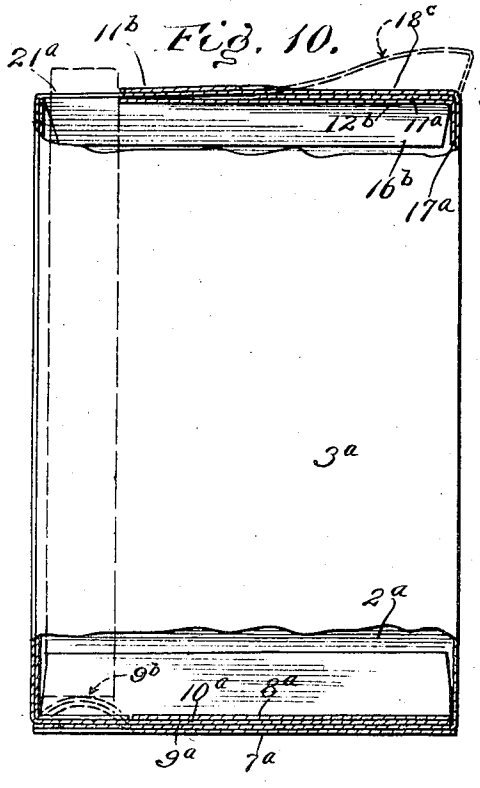

Fig. 9.

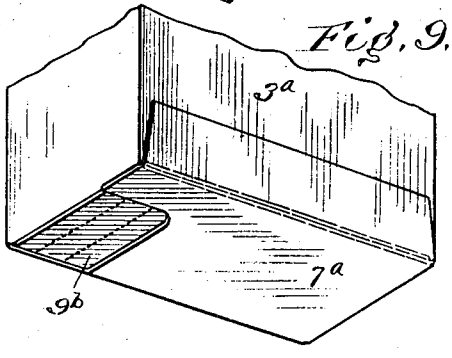

Inventor
F. T. Denman
By
Morrison, Kennedy & Campbell
Attorneys

Patented Mar. 13, 1934 1,951,274

UNITED STATES PATENT OFFICE

1,951,274

CARTON

Frank T. Denman, Forest Hills, N. Y.

Application April 24, 1931, Serial No. 532,456

5 Claims. (Cl. 229—17)

This invention relates to improvements in cartons in which may be packed household articles, tobaccos, and foodstuffs, such as cereals, soap flakes, powders, cigarettes, cigars, candy, and similar articles.

In order to withdraw the contents from a carton of common construction, it is necessary that the cover or some part of the carton be broken or cut open. When only a portion of the contents of a carton opened in such a manner is used, the remaining contents are more or less exposed to deterioration from moisture, drying, dust, and other harmful agencies. It is, therefore, the main object of this invention to provide a carton which will obviate these and other objectionable features and which, for a reasonable period of time after the carton is opened, will keep the remaining contents in substantially their original condition. It is a further object of the invention to provide a carton which is formed from a single blank, and which is practical and efficient yet inexpensive to manufacture.

In furtherance of these objects the present invention provides a carton having an aperture in one side thereof through which the contents of the carton may be removed, and means whereby the aperture is covered and uncovered, the device being so constructed that it is impossible for any of the contents to accumulate about said means in such fashion as to prevent the proper functioning of the covering means. More particularly, the invention provides a carton having an aperture formed by registering openings in folded over ends or flaps of the side walls, which folded over ends go to make up the top wall of the carton; a cover for the aperture made from the top flap of an end wall and adapted to be reciprocated from active to inactive position, and a portion of the bottom wall in alinement with said aperture being flexible for action by finger pressure to aid in extracting the contents of the carton.

In the accompanying drawings, the invention is shown merely by way of example and in preferred form, and obviously many changes and variations may be made therein which will still be comprised within its spirit. Therefore, it is desired that the invention shall not be limited to any specific form or embodiment, except in so far as such limitations are specified in the claims.

Referring to the drawings:

Fig. 1 is a perspective view showing the carton in complete closed condition;

Fig. 2 is a perspective view of the top portion of the carton showing the cover withdrawn to uncover the dispensing aperture;

Fig. 3 is a perspective view of the top portion of the carton with the top wall forming flaps unfolded;

Fig. 4 is a longitudinal section through the top;

Fig. 5 is a plan view of the blank;

Fig. 6 is a perspective view of the complete closed carton showing a modification of the top wall construction;

Fig. 7 is a perspective view of the top of the carton shown in Fig. 6 with the cover in the withdrawn position;

Fig. 8 is a perspective view of the same modified top and cover in unfolded position;

Fig. 9 is a perspective view of the bottom showing the construction of the flexible portion thereof; and

Fig. 10 is a vertical longitudinal section of the carton with cover in withdrawn position.

In the construction of the carton which forms the subject matter of the present invention, and referring now to the particular embodiment illustrated in Figs. 1 to 5 inclusive, a blank 1 (see Fig. 5) is cut in one piece from cardboard or other suitable material, and is provided with score lines so that the blank can be readily folded into the form of a complete carton. The blank is divided by vertical score lines into portions 2 and 3, which form the side walls of the completed carton, and portions 4 and 5, which compose the end walls thereof. The portion or side wall 3 is extended at one edge to provide a surface 6 to which the side wall 4 is attached when the blank is folded. At the bottom of the blank, below the horizontal score line A—A', the material is cut in alinement with the vertical score lines already alluded to, thus forming side flap members 7 and 8 and end flap members 9 and 10. These flap members are adapted to be folded over to form the bottom wall of the finished carton. At the top of the blank, above the horizontal score line B—B', the material is also cut in line with the vertical scores to form side flap members 11 and 12, and end flap members 13 and 14, respectively.

While the carton may be formed with the opening or aperture for the withdrawal of the contents of the carton in any desired location, preferably, and as shown, the top flaps 11, 12 and 13 are formed with openings therein arranged to register, when the flaps are folded to make up the top wall of the complete carton, all as will hereinafter be fully described. The flap 14 constitutes a cover member which is formed to comprise a cover

proper 18 and a connecting neck portion 18^a, it being preferred that the cover member be formed integrally with or permanently connected to the carton, for reasons which will be stated hereinafter.

It will be noted that the term "registering" is used herein for convenience sake to denote a substantial or practical mating rather than an exact coincidence of the boundaries of the openings, and it is to be construed with such meaning in the specification and claims hereof.

In forming the carton, the blank 1 is folded along all the vertical score lines, and the end wall 4 is glued or otherwise sealed to the side flap 6. The bottom flaps 7 and 8, and 9 and 10 are then folded under and sealed in the customary four-flap manner. The top flap 12 is then folded to cover the top, extensions 16 and 17 thereof depending into the interior of the carton adjacent the inner faces of the side wall 2 and the end wall 5, respectively, to which they are sealed. The flap 13, which is provided with ears 13^a, is then folded over the open end of the flap 12, and the ears 13^a are extended inwardly and sealed to the cover 12 on either side of the opening 19. The cover member is next folded over along the score line 23, the cover portion 18 fitting into the recess 20 of the end flap 13 and being held loosely in place by the flap 11, which is then folded over and secured by the extension 15 which overhangs the top and is sealed to the side wall 3.

By this method of construction and sealing the carton is provided with a top enclosing wall which is formed by a plurality of overlapping flaps firmly secured in place yet separated so that a cover proper 18 may slide freely between them without the aid of spacing material. Also, in the top is an aperture 21, formed by registering openings in the flaps, which aperture is covered and uncovered by the sliding cover already alluded to. In order that the cover member 14, as preferably constructed, may be reciprocated, it is scored, as at 24, near its point of attachment to the carton, which score effects a hinge, and an opening 22 in the flap 11 permits the connecting portion 18^a to rise as the cover member is moved rearwardly.

In a top wall construction, formed with an aperture determined by registering openings of identical size and shape, for example, two openings such as 21 (see Fig. 2), there is a liability that, upon withdrawal, some of the contents would find their way into the cavity or pocket 20^a defined by the side flaps 11 and 12 and the intermediate end flap 13. An accumulation of such contents in this cavity or pocket might prevent the cover from completely covering the aperture. The avoidance of such accumulation, which feature is an important one, finds its accomplishment in the novel openings of the flaps already referred to, and their mutual relationship. The flap 11 is provided with a circular opening 21, a slight distance in from the forward end of the flap, whereas the opening 19 in the flap 12 is U-shaped and extends to the end of the flap. The portion 13^c of the end flap 13 extends inward sufficiently only to provide a surface to which the forward end of the flap 12 can be attached, and thereby seal the forward end of the carton.

With this construction, it is impossible to form a pocket or cavity in which any of the contents of the carton can accumulate, rather, when the carton is inverted to withdraw any of the contents, that portion thereof in the forward end of the carton abuts the inner face of the portion 13^c of the flap 13, to which the end 11^c of the flap 11 is sealed. When the carton is returned to an upright position, that portion of the contents lying against the inner face of the portion of the flap 13 already referred to, will fall back into the carton. Any of the contents which may have collected on the areas 12^d or $12^{d'}$ of the flap 12 will be moved forward by the cover, when the latter is being closed, and will be guided by the tapering sides of the ears 13^a through the opening 19 and into the carton. Hence the cover slideway is self-cleaning.

A modification of the carton already described is shown in Figs. 6 to 10, inclusive. In this embodiment of the invention the blank is cut in one piece and scored as previously described, and then folded to form a complete carton, as shown in Fig. 6. In this modified form, however, the top is composed of flaps 11^a, 11^b, and 12^b and the cover member 18^c, the flap 12^b being folded first and secured by the extension 16^b which is sealed to the inner face of the side wall 2^a, the end extension 17^a depending within the carton and being sealed to the inner face of the end wall 5^a, and the flap 11^a is folded over and secured to the top surface of the flap 12^b. The cover member 18^c is next bent along the score line 23^a and folded into position, and the flap 11^b is finally folded over and secured by the extension 15^a to the side wall 3^a.

In accordance with another and important feature of the invention, means are provided for facilitating the withdrawal of the contents thereof from the carton. Preferably, and as shown, therefore, the two side flaps 7^a and 8^a and the two end flaps 9^a and 10^a, which form the bottom wall of the carton, are so constructed that, when folded into final form, a portion of the bottom wall in alinement with the aperture 21^a in the top wall is rendered flexible. To render this portion of the bottom wall flexible the two side flaps 7^a and 8^a are formed with openings which register, when the flaps are folded, and the end flaps 9^a and 10^a, which are intact, are folded in between the flaps already referred to, and left unsealed so that they are free to move. To enhance the flexibility of these intermediate flaps it may be desirable to score the portion 9^b of each which covers the opening in the bottom of the carton.

With this construction, when it is desired to extract some of the contents of the package, for example, a cigarette or a cigar, the cover member 18^c is moved rearwardly to uncover the aperture, this being made possible by the score line 24^a effecting the hinge as previously described. This movement rearwardly is limited by ears 27, forming part of the cover and which contact the forward edges 33 of the flap 11^a. Pressure, as with the finger, is then applied to the flexible portion of the bottom which latter gives way at 9^b (see Fig. 10) and raises the article sufficiently high through the aperture 21^a so that it may be more readily withdrawn from the carton.

It is obvious that a carton of this nature embodies the desirable features and advantages which have been enumerated herein, and others which are readily apparent. For example, by integrally forming with or permanently connecting the cover to the carton, there is eliminated any chance of complete withdrawal and dropping to the floor or ground of the cover, whereby it would be rendered unsanitary and unfit for further use. Such integral formation or perma-

nent connection also eliminates the necessity of complete withdrawal and re-insertion of the cover after every use, and, needless to say, its facility of operation encourages its use.

To reiterate, the invention is shown and described merely by way of example and in preferred form, but obviously many changes and variations may be made therein which will still be comprised within its spirit. It is to be understood, therefore, that the invention is not to be limited to any specific form or embodiment except in so far as such limitations are specified in the claims.

Having thus described my invention, what I claim is:

1. A carton having enclosing side walls, and top and bottom walls, said top wall being formed by overlapping ends of the side walls and being formed with an aperture therein, and a movable cover for said aperture permanently connected to the carton, said cover comprising an enlarged cover proper for closing said aperture and a relatively long and narrow neck portion, the latter being hingedly attached to the top edge of one of the side walls and formed with a flexible portion intermediate its length, whereby to permit easy movement of the cover proper in the plane of its lie without exerting a flexing strain on the neck portion.

2. A carton having enclosing side walls, and top and bottom walls, said top wall being formed by overlapping ends of the side walls and being formed with an aperture therein, and a movable cover for said aperture permanently connected to the carton, said cover comprising an enlarged cover proper for closing said aperture and a relatively long and narrow neck portion, the latter being hingedly attached to the top edge of one of the side walls and formed with an integral flexible portion intermediate its length, whereby to permit easy movement of the cover proper in the plane of its lie without exerting a flexing strain on the neck portion.

3. A carton having enclosing side walls, and top and bottom walls, said top wall being formed by overlapping ends of the side walls and being formed with an aperture therein, and a movable cover for said aperture permanently connected to the carton, said cover comprising an enlarged cover proper for closing said aperture and a neck portion connecting the cover proper to the carton, the neck portion being scored transversely at its point of connection with the carton and at a point intermediate its length, whereby to permit easy movement of the cover proper wholly in the plane of its lie without exerting a flexing strain on the neck portion.

4. A carton having enclosing walls, including side and end walls, and top and bottom walls, the top wall being formed by overlapping flaps of the side walls and an end wall, said end wall being intermediate the side wall flaps to space the latter, an aperture in the top wall formed by registering openings in the overlapping flaps, and a cover for said aperture formed from an end wall flap and adapted for reciprocation between the spaced side wall flaps, said cover comprising an enlarged cover proper for closing the aperture and a neck portion connecting the cover proper to the top edge of the end wall, said neck portion being scored transversely at its point of connection with the end wall and at a point intermediate its length, whereby the cover proper may be easily reciprocated between the spaced flaps forming the top wall of the carton without exerting a flexing strain on the neck portion at any point.

5. A carton having enclosing walls, including side and end walls, and top and bottom walls, said top wall being formed by overlapping flaps of the side walls and one end wall, the flap of the end wall being intermediate the overlapping side wall flaps to space the latter and being formed with a cut-out portion in its inner end, an aperture in the top wall formed by registering openings in the flaps, the opening in the inner flap being of larger dimension than the opening in the outer flap, and a cover for said aperture slidable between the overlapping side wall flaps, said cover being formed from the flap of the other end wall and comprising an enlarged cover proper adapted to fit into the cut-out portion of the end flap and to close the aperture, and a neck portion connected to the top edge of the end wall, said neck portion being scored transversely at its point of connection and intermediate its length to provide a hinge arrangement, whereby the cover may be slid in the plane of its lie without binding.

FRANK T. DENMAN.