(12) UK Patent Application (19) GB (11) 2 155 178 A

(43) Application published 18 Sep 1985

(21) Application No 8505037

(22) Date of filing 27 Feb 1985

(30) Priority data

(31) 3407686 (32) 2 Mar 1984 (33) DE

(71) Applicant
Dragerwerk Aktiengesellschaft (FR Germany),
Moislinger Allee 53-33, D-2400 Lubeck, Federal Republic of Germany

(72) Inventors
Joachim Marcoll,
Bernhard Westrup

(74) Agent and/or Address for Service
Haseltine Lake & Co.,
Hazlitt House, 28 Southampton Buildings, Chancery Lane,
London WC2A 1AT

(51) INT CL[4]
G01N 21/78 21/88

(52) Domestic classification
G1B CB
U1S 1507 2191 G1B

(56) Documents cited
None

(58) Field of search
G1B

(54) Gas-measuring device including an indicator strip

(57) An impregnated indicator strips or band used in gas-measuring devices in which a gas to be determined is passed through the indicator strip or band has the necessary reagents accommodated in microcapsules (6), which are contained on the indicator strip (2) so that they are separate from each other and are storage stable. The reagents are brought together immediately before exposure to the test gas (3) by destruction of the microcapsules on the indicator strip (2) by means of a pair of squeeze rollers (7) pressed against the strip.

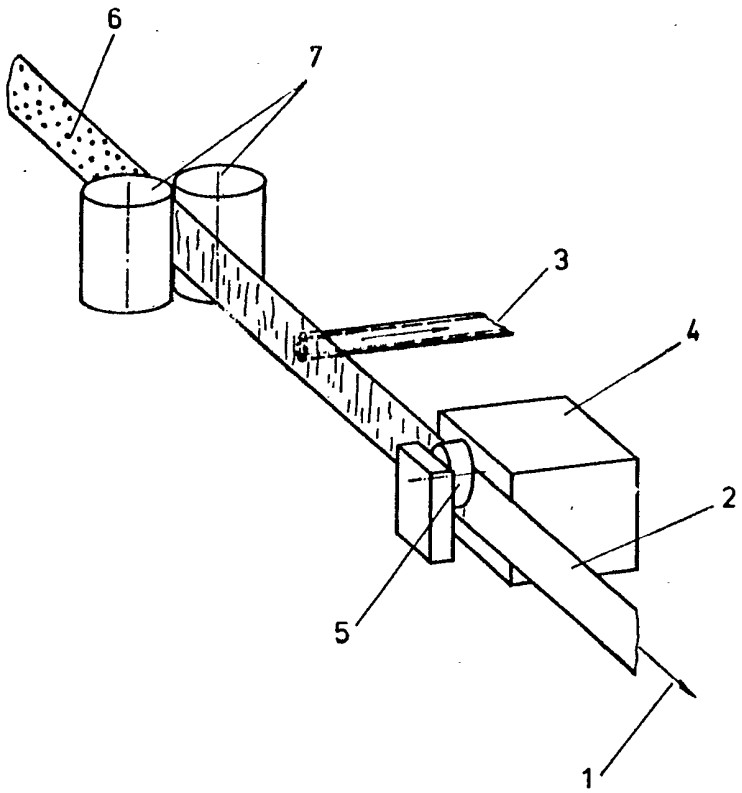

GB 2 155 178 A

The drawing(s) originally filed was (were) informal and the print here reproduced is taken from a later filed formal copy.

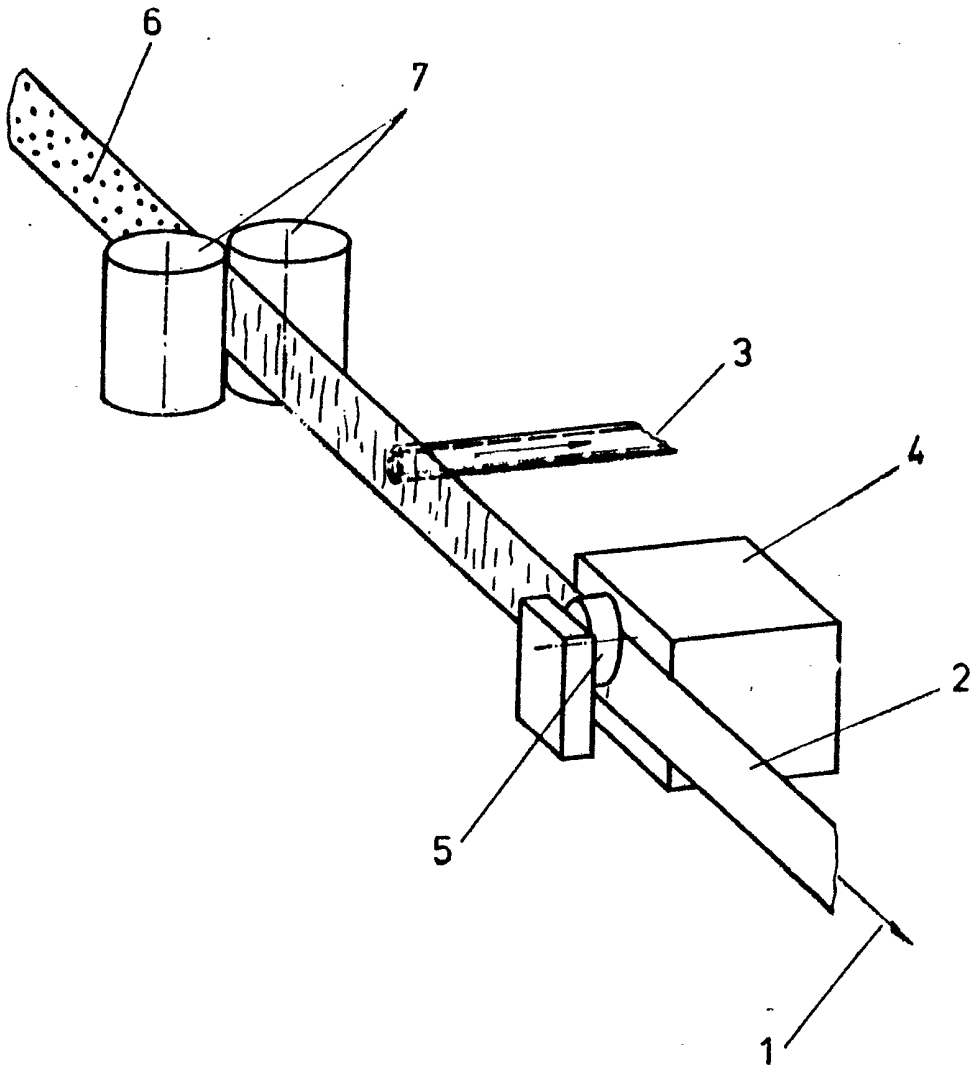
6
7
3
4
2
5
1

SPECIFICATION

Gas-measuring device including an indicator strip

This invention relates to a gas-measuring device including an indicator strip.

A gas-measuring device of this kind, using an indicator strip, is known from DE-A-2615375.

Measuring and warning devices for harmful gaseous substances are known, which devices operate quasi-continuously and are portable, and in which devices chemical reactions which occur with a change in colour on indicator strips automatically warn of danger when variable warning thresholds are exceeded. A sample of the gas to be monitored is generally guided through an impregnated strip, for example an impregnated paper strip. Unfortunately, the readiness for use of the chemicals used on the indicator strips time and again limits the extensive possibilities for using indicator strips which, in other respects, are so useful.

In the DE-A-2615375, there is disclosed more particularly a device for monitoring fluids by means of an indicator strip. For this purpose, a pump brings a fluid sample from outside into contact with an impregnated indicator strip. A transport mechanism makes it possible for the strip to advance intermittently in order, in each case, to expose a fresh portion of the indicator strip to the fluid sample. The strip is guided between spring plates which are provided with openings for the passage of fluid. The indicator strip, made of porous paper which is impregnated with one or more chemical reagents, then discolours in the presence of the gas to be determined in the fluid. The resultant colouration, and with that the concentration of gas present in the fluid, is detected with an optical device. The use of these known monitoring devices is restricted time and again by the lack of stability of the reagents on the indicator strip. Favourable maintenance of supplies of prepared indicator strips is prevented time and again.

The object of the invention is to improve a measuring device of the above-mentioned kind in such a way that the use of indicator strips which are unaffected by storing is possible.

According to the present invention there is provided a device for measuring the extent to which a substance is present in a gas, the device comprising an indicator strip which in use is impregnated with reagents, a means for bringing a sample of the gas into contact with the indicator strip, a means for transporting the indicator strip, and a means for optically determining the discolouration of the indicator strip as a result of the contact of the sample of the gas with the indicator strip; wherein the reagents are contained in microcapsules which are held on the indicator strip; and wherein the means for transporting the indicator strip includes a pair of squeeze rollers which are upstream of the point at which the sample of the gas is brought into contact with the indicator strip and between which the indicator strip is passed so as to break the microcapsules and so as to thereby impregnate the indicator strip with the reagents contained in the microcapsules.

The invention has the advantage that the industrial manufacture of indicator strips is safe and above all exact, because the reagents are no longer in mutual contact but instead are safely and tightly sealed in microcapsules and therefore have unlimited storage properties. They are also always available in a fresh form just for one measurement, as a result of the activation which takes place immediately before use.

A preferred device of the invention is one for measuring the extent to which hydrocyanic acid is present in a gas.

An exemplary embodiment of the invention will now be described with reference to the drawing, which shows a gas-measuring device of the invention.

The gas-measuring device comprises known structural elements, namely a transport apparatus for the advance of an indicator strip 2 in the direction shown by arrow 1, and a pump for conveying a gas sample 3 onto a fresh portion of the indicator strip 2 which in each case has been transported and activated in advance. In a photoelectric measuring head 4, the discolouration arising from contact of the gas sample 3 with the impregnated indicator strip 2, which is pressed against the head 4 by a pressing plate 5, is determined and gives a measure of the concentration of the substance to be determined in the gas sample 3. The indicator strip has already been provided, i.e. during manufacture, with reagents encapsulated in microcapsules 6. When transported, the indicator strip 2 is activated before contact with the gas sample by being drawn through a pair of squeeze rollers 7, between which the microcapsules 6 are destroyed. The reagents are then released to impregnate the strip. This occurs immediately before use of the strip, and ageing cannot therefore result in this case.

Indicator strips for measuring hydrocyanic acid are, for example, provided, in a manner unaffected by storing, with three different microcapsules 6 which contain, separate from each other, solutions which only flow together after the destruction of the microcapsules 6. The three different microcapsules contain, for the purpose of measuring hydrocyanic acid (1) o-dinitrobenzene in an organic solvent such as "Cellosolve" (Registered Trade Mark), (2) p-nitrobenzaldehyde an organic solvent such as "Cellosolve", and (3) NaOH solution.

CLAIMS

1. A device for measuring the extent to which a substance is present in a gas, the device comprising an indicator strip which in use is impregnated with reagents, a means for bringing a sample of the gas into contact with the indicator strip, a means for transporting the indicator strip, and a means for optically determining the discolouration of the indicator strip as a result of the contact of the sample of the gas with the indicator strip; wherein the reagents are contained in microcapsules which are held on the indicator strip; and wherein the means for transporting the indicator strip includes a pair of squeeze rollers which are upstream of the point at

which the sample of the gas is brought into contact with the indicator strip and between which the indicator strip is passed so as to break the microcapsules and so as to thereby impregnate the indicator strip with the reagents contained in the microcapsules.

2. A device as claimed in claim 1 for measuring the extent to which hydrogen cyanide is present in a gas, wherein the microcapsules separately contain (1) o-dinitrobenzene in "Cellosolve", (2) p-nitrobenzaldehyde in "Cellosolve", and (3) NaOH solution.

3. A device as claimed in claim 1, substantially as hereinbefore described with reference to, and as shown in, the drawing.

Printed in the UK for HMSO, D8818935, 7/85, 7102.
Published by The Patent Office, 25 Southampton Buildings, London, WC2A 1AY, from which copies may be obtained.