Oct. 6, 1959 C. D. VERDE ET AL 2,907,563

PIVOT

Filed May 23, 1957 2 Sheets-Sheet 1

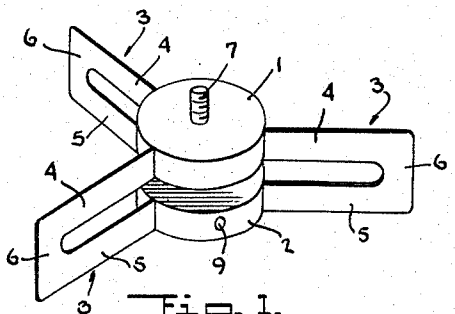

Fig. 1.

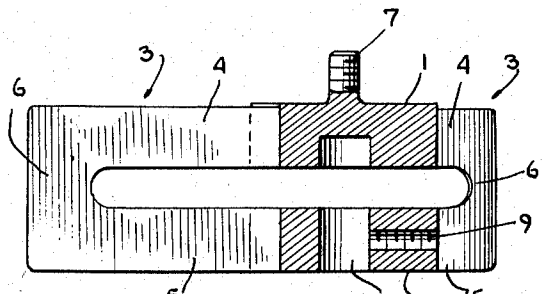

Fig. 2.

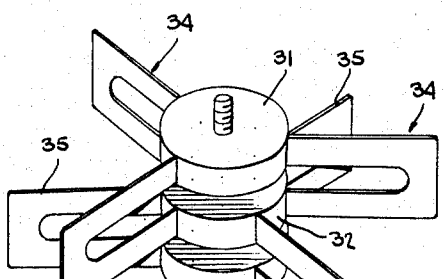

Fig. 8.

Fig. 3.

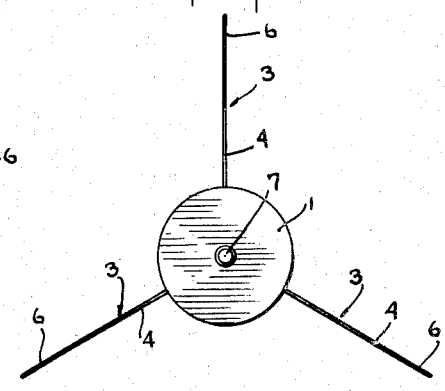

Fig. 4.

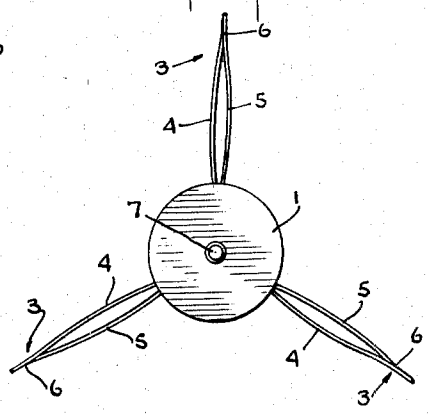

Fig. 7.

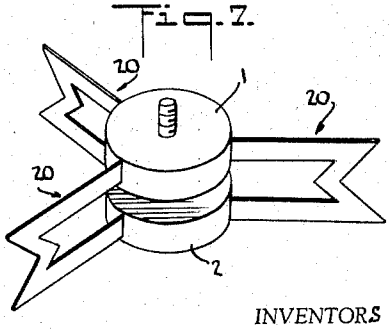

INVENTORS
CHARLES D. VERDE
HARRY E. PULVER

BY Norman & Holland
ATTORNEY

Oct. 6, 1959 C. D. VERDE ET AL 2,907,563

PIVOT

Filed May 23, 1957 2 Sheets-Sheet 2

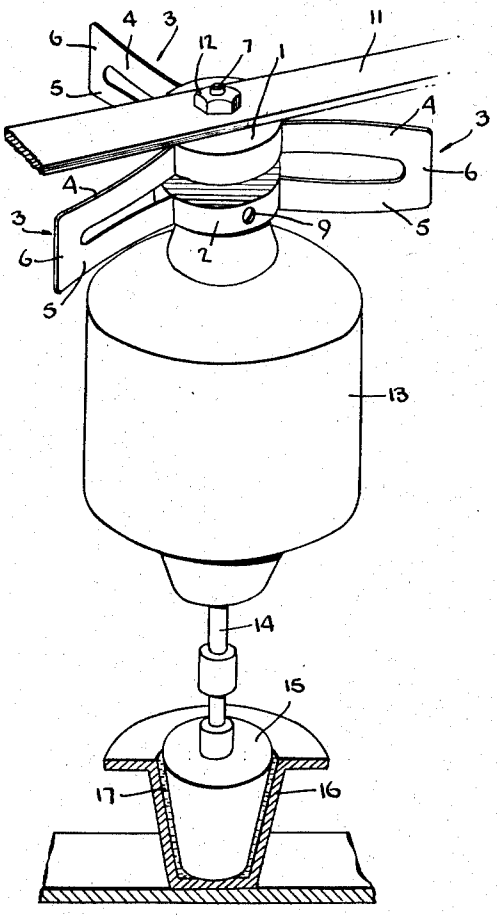

Fig. 5.

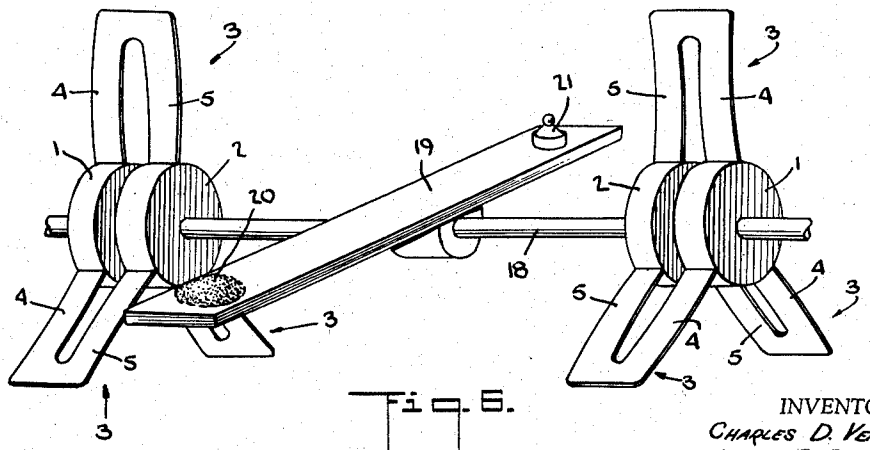

Fig. 6.

INVENTORS
CHARLES D. VERDE
HARRY E. PULVER

BY

ATTORNEY

United States Patent Office 2,907,563 Patented Oct. 6, 1959

2,907,563

PIVOT

Charles D. Verde, Clifton, and Harry E. Pulver, Rochelle Park, N.J.

Application May 23, 1957, Serial No. 661,236

6 Claims. (Cl. 267—1)

The present invention relates to a pivot and more particularly to an improved pivot in which friction is substantially eliminated.

Ordinary pivots utilize two or more bearing surfaces which are in engagement with each other and are moved relative to each other when the pivot is to be turned. A ball and socket pivot is illustrative of such pivots. Although the efficiency of such pivots is reduced by the friction between the bearing surfaces, they have been generally acceptable for most purposes. However, when pivots are used for measuring devices, it has been found that friction often alters the readings of the instruments and even where compensation is made for the friction, the readings are never absolute because the user does not know how much friction exists at a particular moment.

The present invention eliminates these defects and has for one of its objects a pivot in which friction is substantially eliminated.

Another object of the present invention is to provide an improved pivot which does not utilize a plurality of bearing surfaces.

Another object of the present invention is to provide an improved pivot in which there is no frictional contact between the turning surfaces.

A further object of the present invention is to provide an improved pivot which is simple to use and inexpensive to manufacture.

Other and further objects of the invention will be obvious upon an understanding of the illustrative embodiment about to be described, or will be indicated in the appended claims, and various advantages not referred to herein will occur to one skilled in the art upon employment of the invention in practice.

A preferred embodiment of the invention has been chosen for purposes of illustration and description and is shown in the accompanying drawings, forming a part of the specification, wherein:

Fig. 1 is a perspective view of the pivot of the present invention;

Fig. 2 is a sectional view showing the component parts of the pivot;

Fig. 3 is a plan view of the pivot when the pivot is at rest;

Fig. 4 is a plan view of the pivot showing its position when in operation;

Fig. 5 shows one mechanism to which the pivot of the present invention can be applied;

Fig. 6 shows another application of the present invention;

Fig. 7 shows one modification of the pivot of the present invention; and

Fig. 8 shows a second modification thereof.

Referring more particularly to Figs. 1 to 4, the present invention provides a pair of central portions 1 and 2 connected together by a plurality of U-shaped members 3. The hub portions 1 and 2 are preferably in axial alignment with each other and are shown in the drawings as being circular in cross section. It will be understood, however, that the hub portions 1 and 2 can assume other shapes if so desired. The U-shaped connecting members 3 have one leg 4 embedded in one of the hub portions (hub 1 for example) and the other leg 5 embedded

in the other hub portion (hub 2 for example). These U-shaped members 3 are preferably made of leaf spring resilient material so that they may be easily flexed without losing their original shape. The free ends of legs 4 and 5 are connected together by a cross member 6. Preferably, the U-shaped spring elements 3 are made of a single piece of metal so that the legs 4 and 5 and the connecting member 6 will be integral with each other as shown in the drawings.

The hub portion 1 has a threaded stud 7 which can be anchored in any convenient manner to fix the hub portion 1 against rotation. The other hub portion 2 has an opening 8 in which a shaft may be mounted and held there by set screw 9 and is adapted to rotate on its axis relative to the fixed hub 1 when a turning force is applied to the shaft (not shown) in the opening 8. In effect, the portion 1 is a fixed hub whereas the hub portion 2 is a floating hub adapted to turn by means of the spring member 3. Also it will be noted that the hub portion 2 becomes in effect a part of the shaft (not shown) and will turn with it. It will be seen that when a turning force is applied to the floating hub portion 2, the leg 4 of the U-shaped members 3 will be flexed in one direction and the leg 5 will be flexed in the other direction, as shown in Fig. 4, so as to permit the floating hub 2 to turn on its axis relative to fixed hub 1. Since it is well known that when a spring bends there is no friction, it will be seen that the present invention provides a pivot in which friction is reduced to a minimum, as compared to the pivots of the prior art which depended upon frictional engagement between two bearing surfaces and which produced enormous amounts of friction. Also, since there is no friction, no heat is generated and therefore no cooling means need be provided for the pivot of the present invention.

It will also be readily seen that the two hub portions 1 and 2 are held in axial alignment with each other by the U-shaped connecting members 3. The spatial relationship between the two hub portions 1 and 2 is fixed by the cross member 6 connecting the two legs 4 and 5 of the U-shaped connecting member 3. This will prevent the pivot from sagging.

It will be noted that three U-shaped members 3 have been shown in the drawings for connecting the hub portions together. While this is the preferred number of U-shaped members, it will be understood that any number may be used.

Fig. 5 shows the use of the present invention on a viscosimeter for measuring the viscosity of fluids. The hub portion 1 has its threaded stub 7 fixedly mounted on a frame member 11 above the viscosimeter by a nut 12. The other hub portion 2 is free to turn and has a motor 13 mounted thereon by means of the shaft (not shown) of the motor being inserted in the central opening 8 (not shown) of the hub portion 2 and being held thereon by a set screw 9. The armature 14 of the motor has a bobbin 15 mounted thereon which sits in a cup 16 therebeneath. Fluid 17 is placed in the cup 16 so that it sits between the bobbin 15 and cup 16. The motor 13 is then started to turn the armature 14 and bobbin 15. The resistance of the fluid 17 to the turning motion of the bobbin 15 is translated to the motor 13 which is turned slightly by such resistance. This turning of the motor 13, the shaft thereof and the hub portion 2, is possible by the fact that the motor 13 is mounted on the floating hub portion 2 which turns with the motor 13 in effect as a part thereof on its axis relative to the fixed hub portion 1 by the flexing of the legs 4 and 5 of the resilient U-shaped members 3. Suitable measuring means can be attached to either the motor 13 or the floating hub portion 2 to measure the amount of resistance set up by the fluid and thus determine its viscosity. It is important to note,

however, that the slight turning of the motor **13** and floating hub portion **2** is not retarded by any friction in the pivot since the pivot is practically frictionless and therefore a reading of the resistance set up by fluid **17** will be an absolute reading. In other words, by using the present invention there is no friction to be compensated for in order to obtain a viscosity measurement of fluid **17**. It will also be noted that since the two legs **4** and **5** are connected together by a cross member **6**, the floating hub portion **2** on which the motor **13** is mounted will not sag under the weight of motor **13**.

Fig. 6 shows another application of the present invention. In Fig. 6 the improved pivot is used in connection with a laboratory scale. In this case two pivots are used having their fixed hubs **1** fixedly mounted on suitable frame members (not shown) and a shaft **18** is mounted on the two floating hub portions **2**. A lever **19** is fixedly attached to the shaft **18** so that when a substance **20** to be weighed is placed on one end of the lever and a weight **21** is placed on another end, the floating hub portions **2** will turn by the flexure of the legs **4** and **5** of U-shaped spring elements **3** to thereby register the weight of the substance **20**. Here again, since there are no bearing surfaces, there is no friction and an absolute reading of the weight can be obtained.

Fig. 7 shows one modification of the present invention. Instead of using a U-shaped member **3** for connecting the two hub sections together and to permit the floating hub **2** to turn relative to the fixed hub **1**, a W-shaped spring member **20** is used. This gives the floating hub portion **2** a greater turning range since the flexibility of the W-shaped member **20** is greater than the flexibility of a U-shaped member. The operation of this modification is similar to the pivot shown in Figs. 1 to 4.

Fig. 8 shows still another modification of the present invention. In this instance, a plurality of hub portions **31**, **32**, and **33** are used. Each pair of hub portions is connected by a plurality of U-shaped members **34** or **35**. The fixed hub portion **31** and an intermediate hub portion **32** are connected together by one series of U-shaped members **34** whereas the intermediate hub portion **32** and the end hub portion **33** are connected by a second series of U-shaped members **35**. The two groups of U-shaped members are offset from each other, as shown in the drawings, so that the intermediate and end floating hub portions **32** and **33** will each turn on their axis relative to the fixed hub portion **31**. This cascading of hub portions **31**, **32**, and **33** permits the pivot to be turned a greater number of degrees. Since no friction will be produced, the range of the present pivot can be increased without increasing friction.

It will be seen from the above that the present invention provides a pivot in which friction is substantially eliminated, which does not utilize any bearing surfaces and which is simple to use and inexpensive to manufacture.

As various changes may be made in the form, construction, and arrangement of the parts herein without departing from the spirit and scope of the invention and without sacrificing any of its advantages, it is to be understood that all matter herein is to be interpreted as illustrative and not in a limiting sense.

Having thus described our invention, we claim:

1. A pivot comprising a pair of central hub portions in axial alignment to each other, means for maintaining one of said central hub portions fixed, a W-shaped member connecting said central hub portions together, one leg of said W-shaped member being mounted on said fixed central hub portion and the other leg of said W-shaped member being mounted on the other central hub portion, said W-shaped member being resilient in a direction substantially concentric to the axis of one of said hubs to permit the other of said central hub portions to turn on its axis relative to said fixed central hub portion.

2. A pivot comprising a fixed central hub portion, an intermediate central hub portion and an end central hub portion, said central hub portions being in axial alignment with each other, a connecting member connecting said fixed central hub portion to said intermediate hub portion, a second connecting member connecting said intermediate hub portion to said end central hub portion, said two connecting members being angularly spaced from each other and said connecting members being resilient in a direction substantially concentric to the axis of one of said hubs to permit said end and intermediate central hub portions to turn on their axis relative to said fixed central hub portion.

3. A pivot as claimed in claim 2, wherein said connecting members are U-shaped leaf springs.

4. A pivot comprising a pair of relatively rotatable central hub portions in axial alignment to each other, means for maintaining one of said central hub portions fixed, a plurality of spaced, radially extending, flat, resilient, leaf-spring, U-shaped members connecting said central hub portions together, each of said U-shaped members being substantially rigid in a radial plane, one leg of said U-shaped member being mounted on one hub and the other leg being mounted on the other central hub portion, said U-shaped member being resilient in a direction substantially concentric to the axis of one of said hubs to permit said other central hub portion to turn on its axis relative to said fixed central hub portion.

5. A pivot comprising a pair of relatively rotatable central hub portions, means for turning one of said hub portions relative to the other, a plurality of radially extending one piece, resilient, flat, leaf spring, U-shaped members, each of said U-shaped members being substantially rigid in a radial plane, and each of said members comprising a pair of legs and an integral base connecting said legs together, one of said legs being mounted on one of said hub portions and the other of said legs mounted on the other hub portion, said legs being mounted on said hubs in a plane perpendicular to the axis of the hubs, and being normally aligned with each other in a common plane, and said legs being resilient and adapted to bend in opposite directions to permit one of said hub portions to turn on its axis relative to the other hub portions, the base of said U-shaped member being adapted to move inwardly when said hub is rotated to prevent longitudinal displacement of the hubs.

6. A pivot comprising a pair of relatively rotatable central hub portions in axial alignment to each other, means for maintaining one of said hubs fixed, a plurality of radially extending, thin, flat, one-piece, resilient, leaf spring, U-shaped members, each of said U-shaped members being rigid in a radial plane, each of said members comprising a pair of legs and an integral base connecting said legs together, one of said legs being mounted on one of said hubs and the other leg being mounted on the other of said hubs, said legs being mounted on said hubs in a plane perpendicular to the axis of the hubs and being normally aligned with each other in a common plane, and said legs being resilient to permit the other of said hub portions to turn on its axis relative to the fixed hub portion, the base of said U-shaped member being adapted to move inwardly when said hub is rotated and being of sufficient stiffness to maintain the hub portions in a fixed spatial relationship to each other.

References Cited in the file of this patent

UNITED STATES PATENTS

539,161	Almond	May 14, 1895
1,214,307	Hosford	Jan. 30, 1917
2,368,905	Wallace	Feb. 6, 1945
2,441,267	Gulbrandsen	May 11, 1948
2,630,692	Naugler	Mar. 10, 1953
2,735,731	Freebairn et al.	Feb. 21, 1956
2,778,626	Klepp	Jan. 22, 1957