United States Patent [19]

Faulhaber

[11] **3,912,069**

[45] **Oct. 14, 1975**

[54] **SOUND CONFINING TYPEWRITER COVER**

[76] Inventor: **Robert Faulhaber,** 642 Aurora St., Lancaster, N.Y. 14086

[22] Filed: **Aug. 12, 1974**

[21] Appl. No.: **496,340**

[52] **U.S. Cl.** ..... **197/186 B;** 178/42

[51] **Int. Cl.**[2] **B41J 29/02**

[58] **Field of Search**..... 197/60, 180, 186 R, 186 A, 197/186 B; 178/42

[56] **References Cited**

UNITED STATES PATENTS

1,422,433	7/1922	Fries	197/186 B
1,519,224	12/1924	Stickney	197/186 B
1,578,935	3/1926	Stickney	197/186 B
1,656,268	1/1928	Daniel	197/186 B
2,351,725	6/1944	Wack	197/186 B UX
3,122,228	2/1964	Dollenmayer	197/186 R X
3,513,938	5/1970	Buehner	197/186 B UX

Primary Examiner—Harland S. Skogquist

Attorney, Agent, or Firm—Joseph P. Gastel

[57] **ABSTRACT**

A sound confining cover for mounting on the housing of a typewriter including side walls having pins therein for insertion into holes in the typewriter housing, a link on the cover for engaging the bail actuating tab within the housing, said link including a portion external of said cover so that said bail can be manipulated from outside of said housing, and a door hingedly attached to the remainder of the cover for permitting selective access to the area within said cover.

18 Claims, 11 Drawing Figures

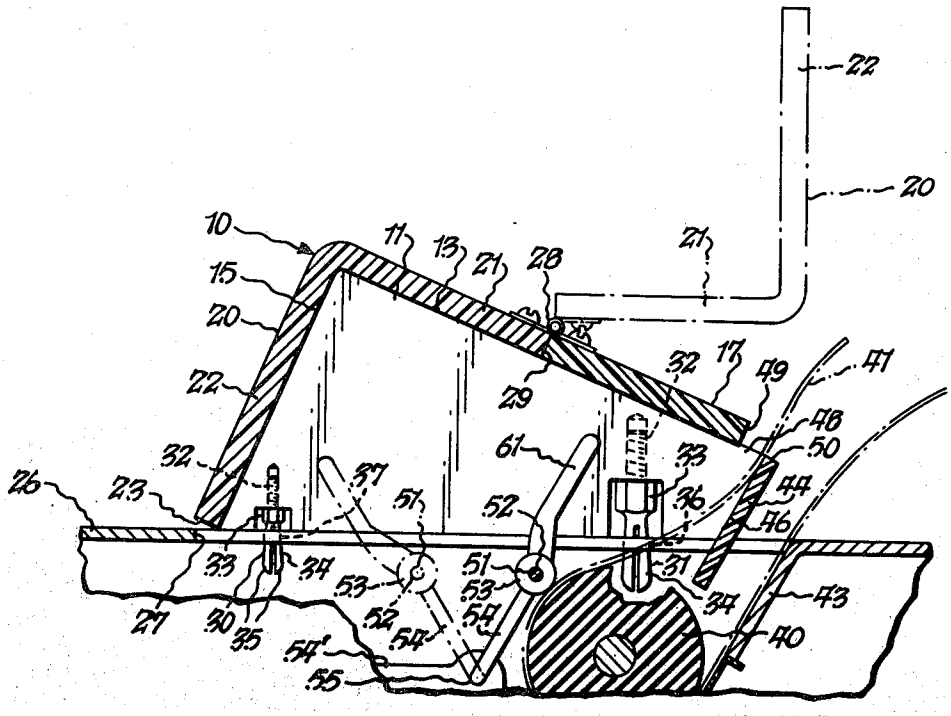

Fig. 1.

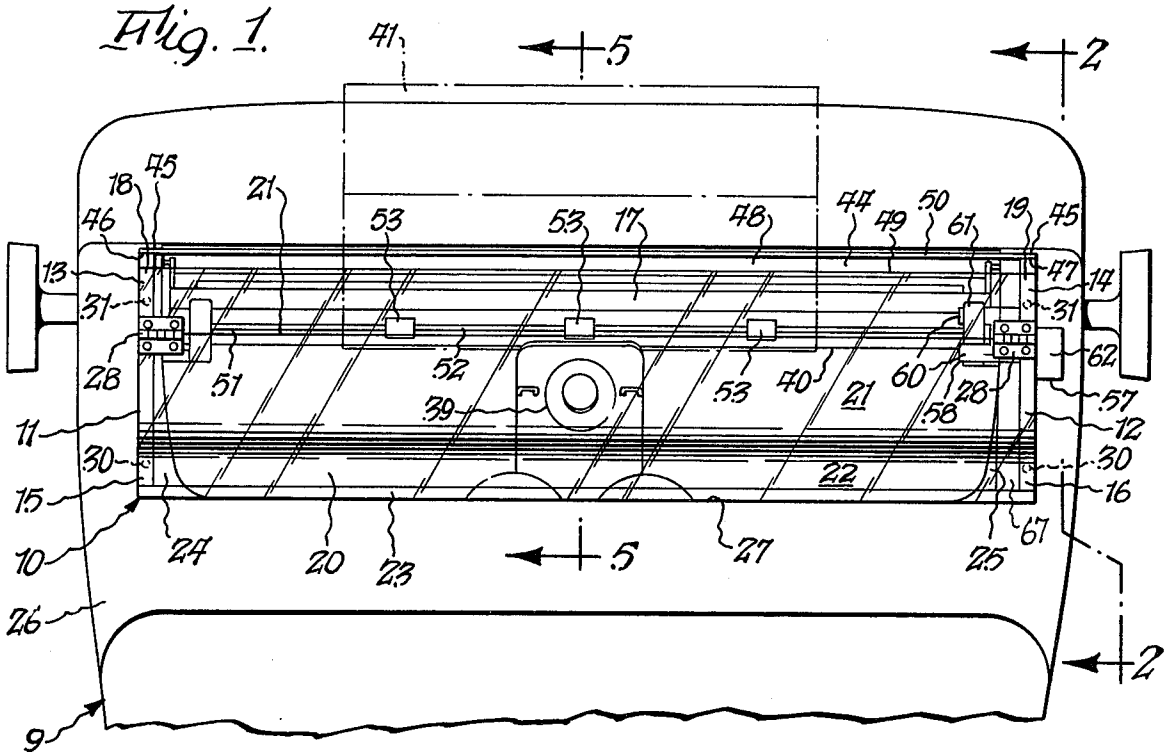

Fig. 2

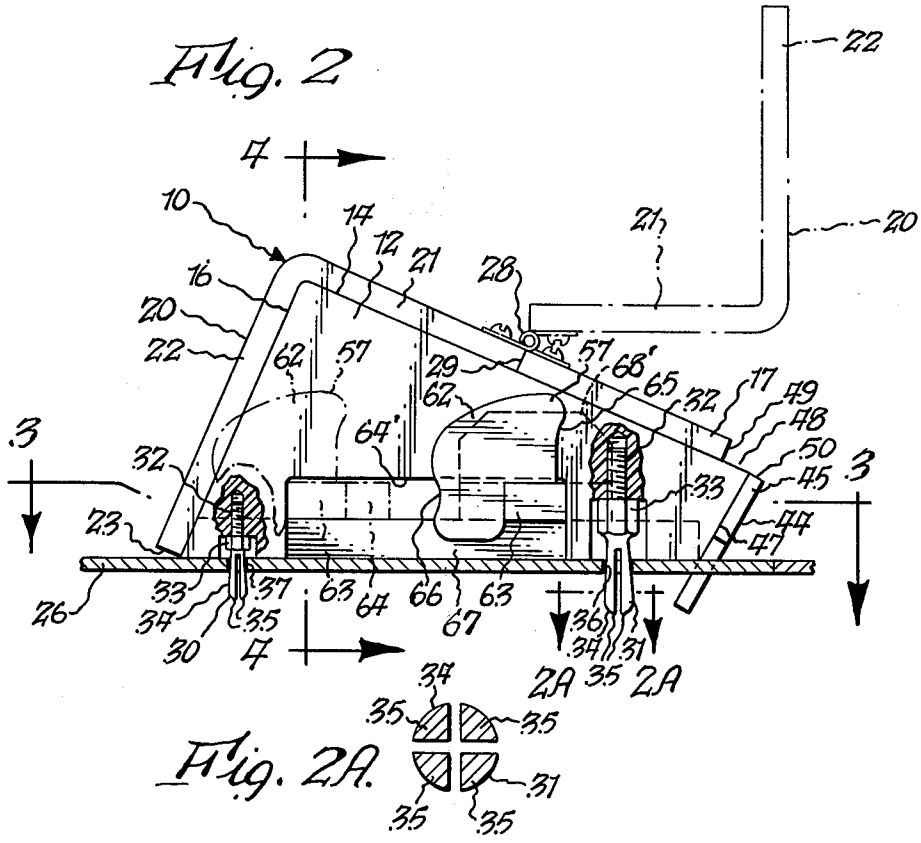

Fig. 2A.

Fig. 3.

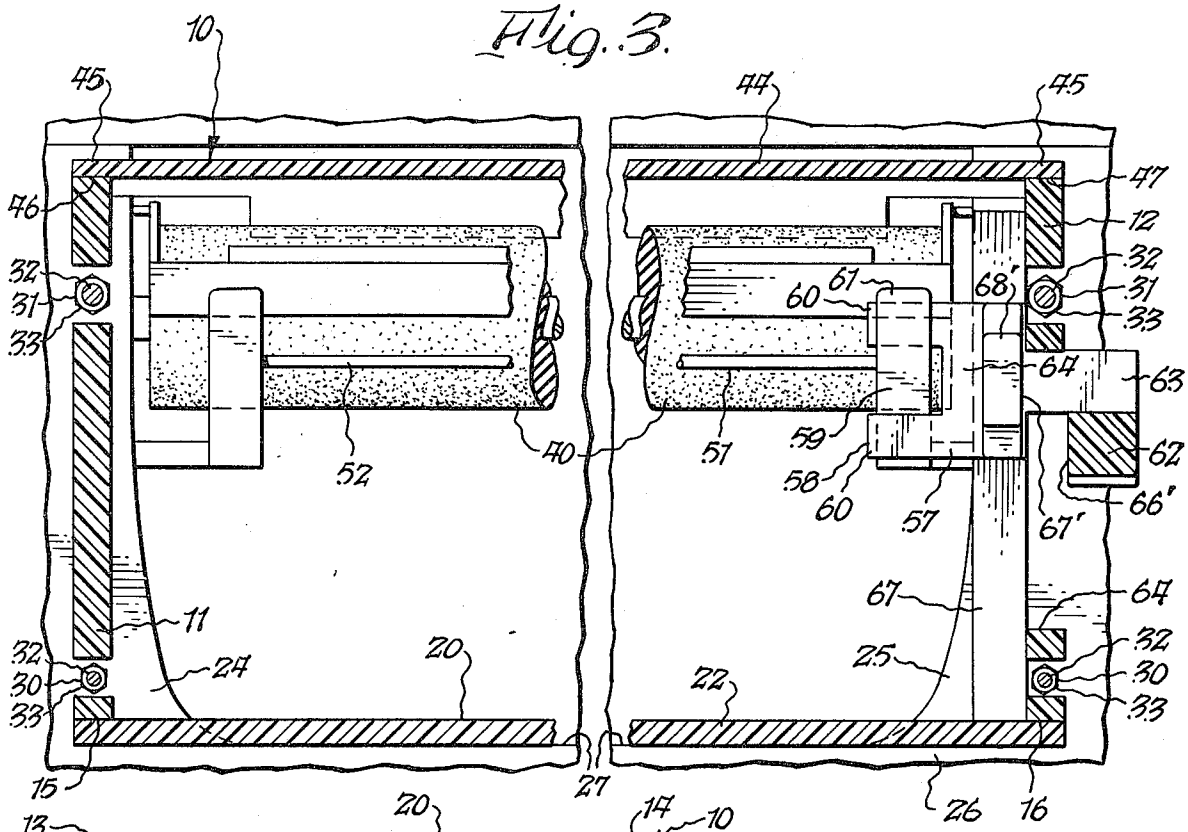

Fig. 4.

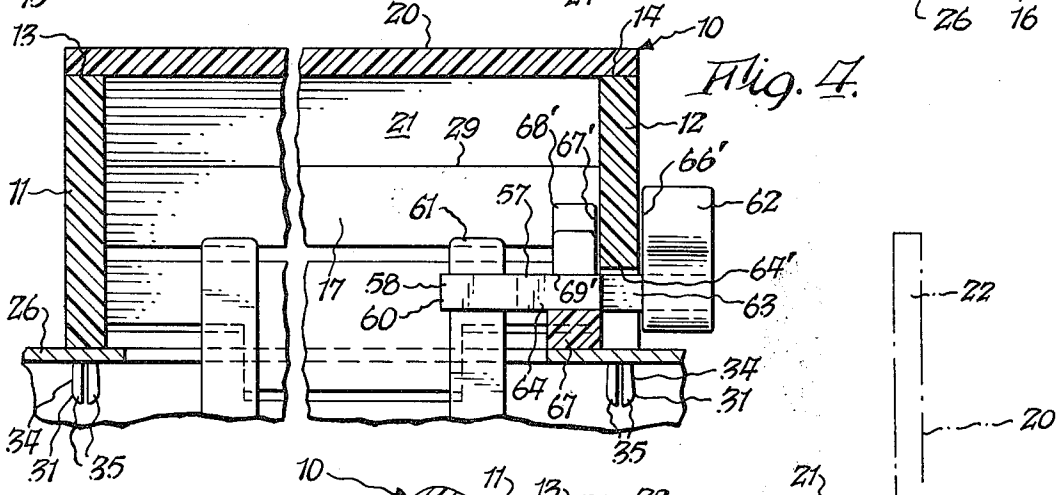

Fig. 5.

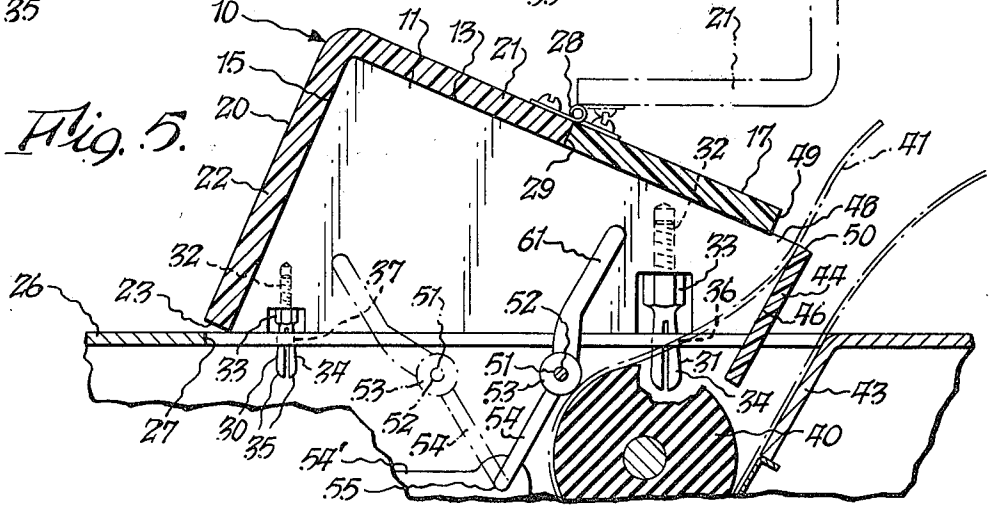

Fig. 6.

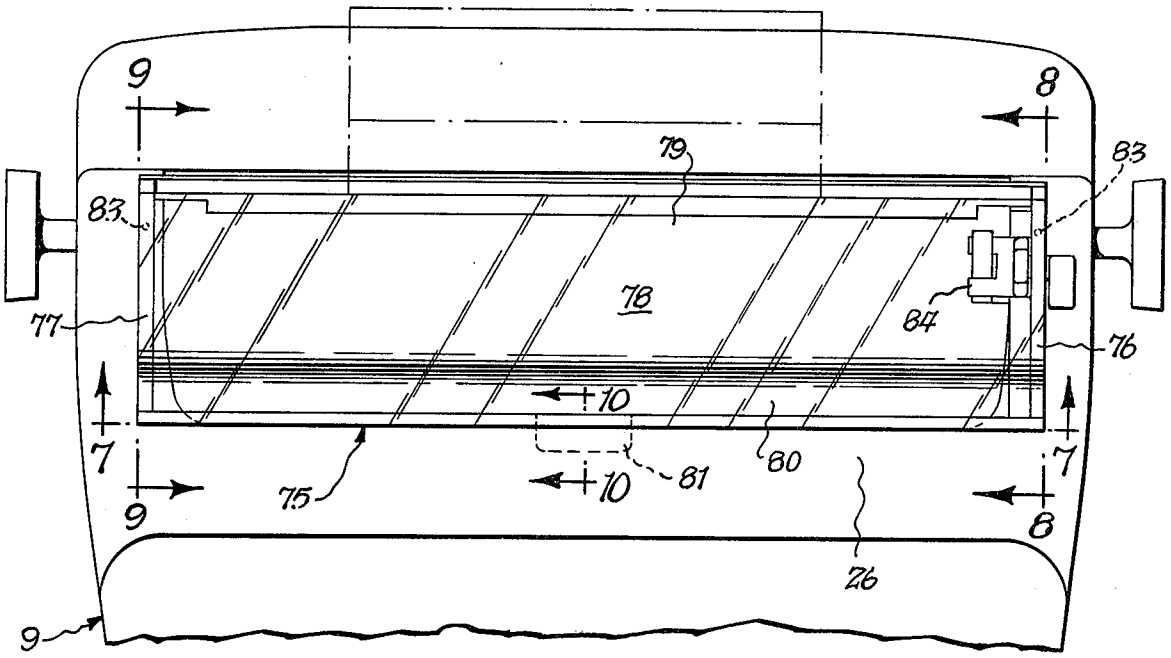

Fig. 7.

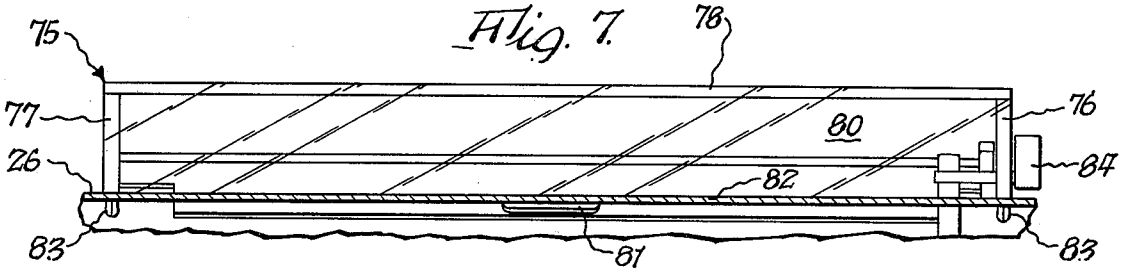

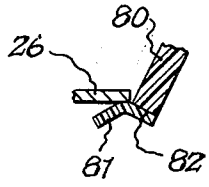

Fig. 10.

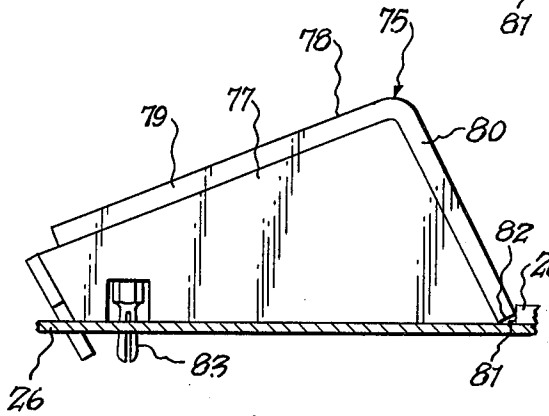

Fig. 9.

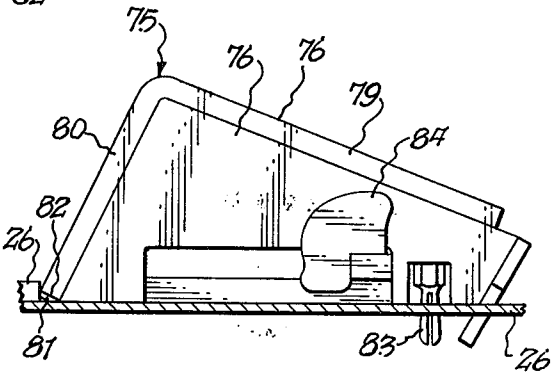

Fig. 8.

SOUND CONFINING TYPEWRITER COVER

The present invention relates to an improved sound confining cover for mounting on the housing of a typewriter.

By way of background, there are numerous typewriters in the field which are used in conjunction with magnetic memory devices. In typewriters of this type data on a magnetic tape or card in conjunction with an electronic circuit causes the typewriter to operate automatically. A typewriter operating under these circumstances is extremely noisy, and when a bank of typewriters in a single room are operating simultaneously, a very high noise level is produced which can be quite distracting to other workers in the general area. In addition, there are ordinary typewriters in the field which do not have sound-confining covers and for which it may be desirable to provide a sound-confining cover.

It is accordingly the primary object of the present invention to provide a sound-confining cover which can be installed on typewriters in the field in an extremely simple and expedient manner.

Another object of the present invention is to provide a sound-confining cover for mounting on the housing of a typewriter, said cover including structure which permits the manipulation of the typewriter bail from outside of the cover, thereby obviating the necessity for entering the cover for this purpose.

A further object of the present invention is to provide an improved sound-confining cover for mounting on the housing of a typewriter, said cover being easily mounted and demounted from the typewriter housing without the use of tools so as to permit access to certain internal parts of the typewriter, as required.

Yet another object of the present invention is to provide an improved sound-confining cover for mounting on the housing of a typewriter, said cover including a door thereon which permits selective limited access to the area within the cover, as may be required during operation, without requiring that the entire cover be demounted for this purpose. Other objects and attendant advantages of the present invention will readily be perceived hereafter.

The improved sound-confining cover of the present invention is for mounting on the housing of a typewriter having an opening therein for permitting paper to be supplied to the operating elements of said typewriter and having a bail for holding said paper against the platen of said typewriter and a bail actuating tab coupled to said bail comprising cover means for substantially completely covering said opening and causing said bail and bail actuating tab to be enclosed within said housing, mounting means for mounting said cover means on said housing, and bail actuating means including a first portion within said cover means for moving said bail toward and away from said platen and a second portion outside of said housing for manual manipulation. In addition, the cover means may include door means for selectively permitting access to the area within said cover means. The various aspects of the present invention will be more fully understood when the following portions of the specifications are read in conjunction with the accompanying drawings wherein:

FIG. 1 is a fragmentary plan view showing the improved sound confining typewriter cover in position on a typewriter;

FIG. 2 is a fragmentary side elevational view, with portions broken away, taken substantially along line 2—2 of FIG. 1 and showing the door of the cover in both a closed and an open position;

FIG. 2A is a cross sectional view taken substantially along line 2A—2A of FIG. 2;

FIG. 3 is a fragmentary cross sectional view taken substantially along line 3—3 of FIG. 2 and showing various details of construction of the sound-confining cover and the bail actuating link;

FIG. 4 is a fragmentary cross sectional view taken substantially along line 4—4 of FIG. 2 and showing further details of construction of the sound-confining cover and the bail actuating link;

FIG. 5 is a fragmentary cross sectional view taken substantially along line 5—5 of FIG. 1 and showing the relationship of the sound-confining cover door to the opening in the typewriter housing and also showing the structure on the cover which is used to guide paper leaving the platen;

FIG. 6 is a fragmentary plan view, similar to FIG. 1 but showing a modified form typewriter cover which does not possess a door for permitting access to the area within the cover;

FIG. 7 is a fragmentary cross sectional view taken substantially along line 7—7 of FIG. 6;

FIG. 8 is a fragmentary side elevational view, partially in cross section, taken substantially along line 8—8 of FIG. 6;

FIG. 9 is a fragmentary side elevational view, partially in cross section, taken substantially along line 9—9 of FIG. 6; and

FIG. 10 is a fragmentary cross sectional view taken substantially along line 10—10 of FIG. 6 and showing the relationship between the cover retaining tab and the portion of the typewriter housing with which it coacts.

The improved sound-confining cover **10** preferably is fabricated from clear, transparent plastic for mounting on typewriter **9** and includes side walls **11** and **12** having rearwardly sloping upper edges **13** and **14**, respectively, and downwardly sloping forward edges **15** and **16**, respectively. An upper panel **17** has its opposite ends **18** and **19** suitably secured, as by cement, to the adjacent portions of edges **13** and **14**, respectively. A door portion **20** has an upper panel **21** which is in alignment with panel **17** when the door **20** is in a closed position. Door **20** also includes a front panel **22** which is formed integrally with and is a continuation of panel **21**. Panel **22** extends at substantially a right angle to panel **21**. When door **20** is in the closed, solid-line position of FIGS. **2** and **5**, the end portions of the lower edge portion **23** of panel **22** rests on adjacent portions **24** and **25** of typewriter housing **26** (FIG. **1**) while the central portion of edge **23** fits closely to edge **27** (FIG. **5**) of typewriter housing **26**. When door **20** is closed, the outer end portions of door panel **21** rests on edges **13** and **14** of side panels **11** and **12**, respectively, and the end portions of front panel **22** rests on edge portions **15** and **16** of side panels **11** and **12**, respectively.

The ability of door **20** to move from the closed position shown in solid lines in FIGS. **2** and **5** to the open position shown in dotted lines is possible because door **20** is attached to panel **17** by means of spaced hinges **28** which suitably attach door **20** to panel **17**. It is to be noted that when door **20** is closed, the adjacent longitudinal edges of panels **17** and **21** abut each other at **29** throughout their length, thereby effectively causing panel **17** and door **20** to be equivalent to a single un-

broken unit. Door **20** is opened for the purpose of correcting the paper being typed on by means of correcting tape, as may be required when using a conventional typewriter. The door also permits any access which may be required for a typewriter associated with a memory device.

For the purpose of mounting cover **10** on typewriter housing **26,** pins **30** and **31** are mounted on each of side panels **11** and **12,** as shown in FIGS. **2** and **5.** Each pin **31** has a threaded end portion **32** which is threadably received in side panels **11** and **12.** A nut portion **33,** which is adjacent portion **32,** limits the amount that portion **32** is threaded into the side panels and also receives the wrench for turning pin **31.** Merging outwardly from nut portion **33** is a split stem **34** which is divided into four resilient quadrants **35** which can move toward each other when stem **34** is forced through aperture or bore **36** in housing **26.** At this point it is to be noted that bores **36** and **37** are drilled into housing **26,** as housing **26** does not have these drilled bores as originally fabricated. At this point it is to be noted that pins **30** are equivalent in all respects to pins **31** and therefore a detailed description thereof will be omitted in the interest of brevity. However, pins **30** differ from pins **31** in that they are of a much smaller size. Pins **30** and **31** are known in the trade as "banana" pins.

In order to install cover **10** on housing **26,** pins **31** are inserted first into bores **36** while pins **30** are held above housing **26** and thereafer the cover **10** is rocked in a counterclockwise direction in FIG. **2** until pins **30** are fully seated within bores **37.** The quadrants **35** of pins **31** and equivalent structure of pins **30** will be biased against the sides of their respective bores because of their resiliency, thereby producing a snug fit of cover **10** on the housing.

The typewriter **9** includes a plurality of operating parts including a ball **39** and a platen **40** around which paper **41** is threaded in the conventional manner. In this respect it can be seen from FIG. **5** that the paper is guided between typewriter portion **43** and platen **40,** and it therefore passes between typewriter portion **43** and panel **44** of cover **10.** In this respect panel **44** has its opposite end portions **45** secured as by cementing to edges **46** and **47** of side panels **11** and **12,** respectively. A space **48** is located between edge **49** of panel **17** and top edge **50** of panel **44** for substantially the entire length of these members to permit the paper **41** leaving platen **40** to pass out of cover **10.**

In order to hold paper **41** against platen **40,** a bail **51** is provided. This bail includes a rod **52** which mounts a plurality of spaced cylindrical rollers **53** which bear against the paper so as to hold it in position on the platen when bail **51** is in the solid-line position shown in FIGS. **1** and **5.** However, in order to position the paper **41** properly against platen **40,** bail **51** must be moved from the solid-line position of FIG. **5** to the dotted-line position shown therein. This is possible because a pair of links **54** on opposite ends of rod **52** are pivoted at **55** relative to the typewriter frame **54'.**

In order to permit pivoting of bail **51** from the solid-line position to the dotted-line position of FIG. **5,** a bail actuating link **57** is provided so as to permit the manipulation of bail **51** from the outside of cover **10.** To this end link **57** includes a forked end portion **58** having a space **59** between tines **60.** A tab **61** forms a conventional part of bail **51** and it is this tab which is conventionally used to shift bail **51** between the solid and dotted line positions of FIG. **5** when cover **10** is not being used. However, cover **10** will obstruct access to tab **61** when cover **10** is in position. Accordingly, since tines **60** straddle tab **61,** when link **57** is moved to the left to the dotted line position in FIG. **2,** bail **51** will move to the dotted-line position in FIG. **5.** In order to effect such movement, link **57** includes a knob **62** rigidly affixed to stem **63** which is a continuation of the central portion **64** of link **57.** Thus, by grasping knob **62** and moving it to the left in FIG. **2,** the bail **51** will be pulled away from platen **40,** and by moving knob **62** to its solid-line position in FIG. **2,** bail **51** will press against paper **41** and cause it to line against platen **40.**

At this point it is to be noted that knob **62** is contoured at **65** and **66** for ease of handling by the typewriter operator. The space **59** between tines **60** essentially provides a lost-motion connection with tab **61** so as to permit relative movement therebetween while link **57** is being manipulated. The lost-motion connection provides a convenient manner of coupling link **57** and tab **61** without the use of complex structure. At this point it is to be noted that central portion **64** of link **57** rides in slot **64'** in side panel **12.** Slot **64'** is provided by leaving this space blank after cementing a lower elongated member **67** to the inside of side panel **12** in the manner shown in FIGS. **2** and **3.** Link **57** is retained in slot **64'** because side wall **12** is loosely sandwiched between side **66'** of knob **62** and side **67'** of lug **68'** having its lower edge **69'** cemented to central portion **64** of link **57.**

Whenever access is desired to the inside of cover **10,** door **20** need merely be swung from its solid-line position shown in FIG. **2** to its dotted-line position. This obviates the necessity to remove cover **10** for most of the time that access is required, as for straightening paper **41,** or correcting the paper, or for any other reason. However, under certain circumstances complete removal of cover **10** will be required. In order to do this, all that need be done is to pivot cover **10** in a clockwise direction in FIG. **2** so as to cause pins **30** to pull out of bores **37** in which they are located. Thereafter, cover **10** is lifted so as to cause pins **31** to move out of bores **36.** To reinstall cover **10,** the above procedure is reversed, as described in detail above. When cover **10** is installed, the lowermost edges of panels **11** and **12** will seat firmly on housing **26.**

In FIGS. **6–10** an alternate embodiment of the present invention is disclosed. The cover **75** is essentially identical in all respects to cover **10** of FIGS. **1–5** except that it does not have a door. In addition, it utilizes a different type of securing arrangement for attaching it to the housing **26** of the typewriter **9.**

Cover **75** includes side panels **76** and **77** and a bent panel **78** having downwardly sloping portions **79** and **80** secured to the edges (not numbered) of side panels **76** and **77.** A tab **81** has a first portion secured, as by cement, to edge **82** of panel **80.** The free end of tab **81** is adapted to underlie the edge of typewriter housing **26** adjacent thereto, as can be seen from FIGS. **6** and **10.** After tab **81** has been inserted under typewriter housing **26,** the cover **75** is swung in a clockwise direction in FIG. **8** until pins **83** extending downwardly from side panels **76** and **77** enter suitable bores which have been drilled in housing **26,** as described in detail above. The cover **75** will remain in position for as long as is desired and the bail of the typewriter can be manipulated by

the use of link **84** which is identical to link **57** described in detail above in FIGS. **1–5.**

Except for the structure described above relative to FIGS. **6–10,** it will be understood that cover **75** is essentially identical to cover **10** of FIGS. **1–5.**

Since the entire cover is made out of clear, transparent plastic, all parts of the typewriter and the paper which is being typed on can be observed by the typewriter operator. With the embodiment of FIGS. **1–5,** the door may be selectively opened as required for access to the area within the cover. In the embodiment of FIGS. **6–10,** all parts of the typewriter can be viewed through the clear, transparent plastic cover **75.** However, in the event it becomes necessary to obtain access to the area within the cover, all that need be done is to pivot the cover in a counterclockwise direction in FIG. **8** so as to cause pins **83** to move out of the apertures in which they are located and thereafter slide the cover **75** slightly to the right in FIG. **8** so as to cause tab **81** to become disengaged from the underside of housing **26.**

It has been found in operation that the covers of the present invention are manifestly capable of achieving the above enumerated objects because they tend to confine the sound within the typewriter so that it does not have as great a disturbing effect on the environment as it would otherwise have if the typewriter was uncovered. The sound is muffled to a very low percentage of what it would otherwise be without the cover of the present invention.

While preferred embodiments of the present invention have been disclosed, it will be understood that the present invention is not limited thereto but may be otherwise embodied within the scope of the following claims.

What is claimed is:

1. A sound-confining cover for mounting on the housing of a typewriter having an opening therein for permitting paper to be supplied to the operating elements of said typewriter and having a bail for holding said paper against the platen of said typewriter and a bail actuating tab coupled to said bail comprising cover means for substantially completely covering said opening and causing said bail and said bail actuating tab to be enclosed within said housing, mounting means for mounting said cover means on said housing, and bail actuating means including a first portion within said cover means for moving said bail toward and away from said platen and a second portion outside of said housing for manual manipulation.

2. A sound-confining cover as set forth in claim **1** wherein said first portion of said bail actuating means comprises a forked end for effecting a lost-motion connection with said bail actuating tab within said cover means, and wherein said second portion of said bail actuating means comprises a knob, and a central portion connecting said first and second portions.

3. A sound-confining cover as set forth in claim **2** including a slot in said cover means, and wherein said central portion rides in said slot.

4. A sound-confining cover as set forth in claim **1** wherein said mounting means include attachment means for detachably mounting said cover means on said housing.

5. A sound-confining cover as set forth in claim **4** including slot means in said housing for guiding said paper relative to said housing.

6. A sound-confining cover as set forth in claim **4** wherein said attachment means include pin means on said cover means and bore means in said housing.

7. A sound-confining cover as set forth in claim **6** wherein said attachment means include tab means on said cover means for engaging an under portion of said housing.

8. A sound-confining cover as set forth in claim **1** including door means on said cover means for selectively permitting access to the area within said cover means.

9. A sound-confining cover as set forth in claim **8** wherein said mounting means include attachment means for detachably mounting said cover means on said housing.

10. A sound-confining cover as set forth in claim **1** including slot means in said housing for guiding said paper relative to said housing.

11. A sound-confining cover for mounting on a housing of a typewriter having an opening therein for permitting paper to be supplied to the operating elements of said typewriter comprising cover means for substantially completely covering said opening, mounting means for securing said cover means to said housing, and door means on said cover means for selectively permitting access to the area within said cover means while permitting the remainder of said cover means to remain in its normal installed position on said housing.

12. A sound-confining cover as set forth in claim **11** wherein said door means comprises a portion of said cover means, and hinge means for attaching said door means to the remainder of said cover means.

13. A sound-confining cover as set forth in claim **11** wherein said mounting means includes attachment means for detachably securing said cover means to said housing.

14. A sound-confining cover as set forth in claim **13** wherein said attachment means comprises pin means for insertion into bore means in said housing.

15. A sound-confining cover as set forth in claim **11** including slot means in said housing for guiding said paper relative to said housing.

16. A sound-confining cover for mounting on the housing of a typewriter having an opening therein for permitting paper to be supplied to the operating elements of the typewriter comprising cover means for substantially completely covering said opening, and attachment means on said cover means for detachably attaching said cover means to said housing, said attachment means comprising a plurality of pins for reception in mating apertures in said housing.

17. A sound-confining cover as set forth in claim **16** wherein said attachment means includes tab means for engaging said housing.

18. A sound-confining cover as set forth in claim **16** including slot means in said housing for guiding said paper relative to said housing.

* * * * *