(12) INTERNATIONAL APPLICATION PUBLISHED UNDER THE PATENT COOPERATION TREATY (PCT)

(19) World Intellectual Property Organization
International Bureau

(43) International Publication Date
24 September 2009 (24.09.2009)

PCT

(10) International Publication Number
WO 2009/115948 Al

(51) International Patent Classification:
A61B 5/00 (2006.01) ***A61M*** *5/172* (2006.01)
A61B *5/083* (2006.01) ***A61M 16/00*** **(2006.01)**

(21) International Application Number:
PCT/IB2009/05 1017

(22) International Filing Date:
11 March 2009 (11.03.2009)

(25) Filing Language: English

(26) Publication Language: English

(30) Priority Data:
08102665.0 17 March 2008 (17.03.2008) EP

(71) Applicant *(for DE only):* **PHILIPS INTELLECTUAL PROPERTY & STANDARDS GMBH** [DE/DE]; Lübeckertordamm 5, 20099 Hamburg (DE).

(71) Applicant *(for all designated States except DE, US):* **KONINKLIJKE PHILIPS ELECTRONICS N.V.** [NL/NL]; Groenewoudseweg 1, NL-5621 BA Eindhoven (NL).

(72) Inventors; and
(75) Inventors/Applicants *(for US only):* **NEUMANN, Rolf** [DE/DE]; c/o High Tech Campus 44, NL-5656 AE Eindhoven (NL). **TIVIG, Gerhard** [DE/DE]; c/o High Tech Campus 44, NL-5656 AE Eindhoven (NL). GEGNER, **Guenter** [DE/DE]; c/o High Tech Campus 44, NL-5656 AE Eindhoven (NL). GREINER, **Harald** [DE/DE]; c/o High Tech Campus 44, NL-5656 AE Eindhoven (NL).

(74) **Agents:** SCHOUTEN, Marcus, M. et al; High Tech Campus 44, NL-5656 AE Eindhoven (NL).

(81) Designated States *(unless otherwise indicated, for every kind of national protection available):* AE, AG, AL, AM, AO, AT, AU, AZ, BA, BB, BG, BH, BR, BW, BY, BZ, CA, CH, CN, CO, CR, CU, CZ, DE, DK, DM, DO, DZ, EC, EE, EG, ES, FI, GB, GD, GE, GH, GM, GT, HN, HR, HU, ID, IL, IN, IS, JP, KE, KG, KM, KN, KP, KR, KZ, LA, LC, LK, LR, LS, LT, LU, LY, MA, MD, ME, MG, MK, MN, MW, MX, MY, MZ, NA, NG, NI, NO, NZ, OM, PG, PH, PL, PT, RO, RS, RU, SC, SD, SE, SG, SK, SL, SM, ST, SV, SY, **TJ,** TM, TN, TR, TT, TZ, UA, UG, US, UZ, VC, VN, ZA, ZM, ZW.

(84) Designated States *(unless otherwise indicated, for every kind of regional protection available):* ARIPO (BW, GH, GM, KE, LS, MW, MZ, NA, SD, SL, SZ, TZ, UG, ZM, ZW), Eurasian (AM, AZ, BY, KG, KZ, MD, RU, TJ, TM), European (AT, BE, BG, CH, CY, CZ, DE, DK, EE, ES, FI, FR, GB, GR, HR, HU, IE, IS, **IT,** LT, LU, LV, MC, MK, MT, NL, NO, PL, PT, RO, SE, SI, SK, TR),

[Continued on next page]

(54) Title: A CLOSED LOOP SYSTEM FOR AUTOMATICALLY CONTROLLING A PHYSIOLOGICAL VARIABLE OF A PATIENT

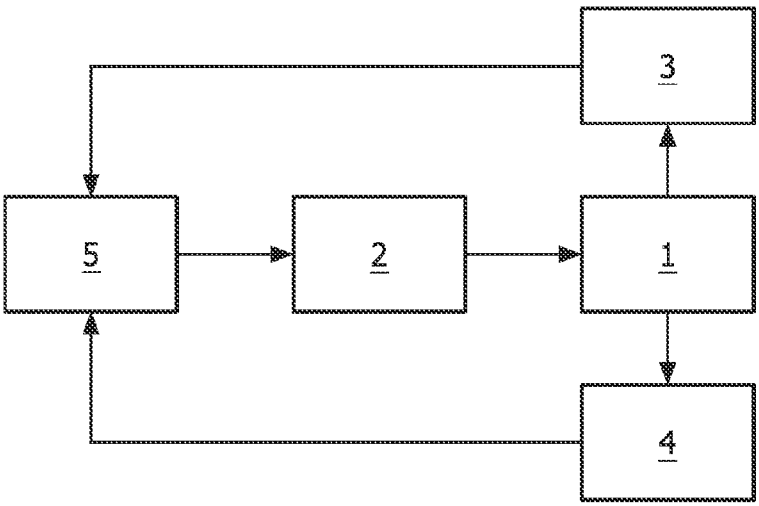

FIG. 1

(57) Abstract: The invention relates to a closed loop system for automatically controlling a physiological variable of a patient (1), with a measuring unit (3) for measuring a direct or an indirect value for the physiological variable of the patient (1), and an actuator (2) for treating the patient in order to affect the physiological variable. It is an essential feature of the invention that the actuator (2) is adapted for being controlled by the value measured by the measuring unit (3) and an additional value. Accordingly, a system for automatically controlling a physiological variable of a patient 1 in a closed loop is provided which is more efficient and reliable.

WO 2009/115948 A1

OAPI (BF, BJ, CF, CG, CI, CM, GA, GN, GQ, GW, ML, MR, NE, SN, TD, TG).

Published:

— *with international search report (Art. 21(3))*

A CLOSED LOOP SYSTEM FOR AUTOMATICALLY CONTROLLING A PHYSIOLOGICAL VARIABLE OF A PATIENT

FIELD OF THE INVENTION

The invention relates to the field of controlling a physiological variable of a patient, especially using a closed loop system.

BACKGROUND OF THE INVENTION

In a physiological closed loop system the transfer functions of an actuator with which a patient is treated, the patient itself and sometimes also the measurement of the patient variable are not constant and influenced by several external factors. In principle, an automatic closed loop system shall reduce the work load of the care givers by partially replacing their actions with regard to the adjustments of the delivery of oxygen, medication or other treatment of the patient.

In US 5,365,922, for example, a closed loop non-invasive oxygen saturation control system is described. There, it is proposed to provide an adaptive controller for delivering a fractional amount of oxygen to a patient. The controller utilizes an oximeter coupled by a non-invasive sensor to the patient for measuring the blood hemoglobin saturation of the patient. The oximeter generates a blood saturation output signal which is representative of the patient's blood hemoglobin saturation. A processing means evaluates the oximeter output signal and, based on the evaluation, provides a pseudo blood saturation signal. A feedback control means responsive to the pseudo output signal sets the fractional amount of oxygen to be delivered to the patient. When deviations of the oximeter output signal are excessive, the pseudo output signal causes a gradual increase in the fractional amount of oxygen for the patient. Further, the feedback control means is periodically disconnected, and the response of the patient to random changes in the fractional amount of oxygen delivered to the patient is used to adapt the response characteristics of the feedback control means in a manner tailored to

the needs of the patient. This way, it is intended to avoid situations in which automatically controlling the variable of the patient, i.e. the patient's blood hemoglobin saturation breaks down due to a change in the other parameters of the patient.

Accordingly, physiological closed loop systems use a patient variable for the control algorithm to calculate the actuator signal. This often has the limitation that any disturbance on that specific patient signal results in either the inability to perform a control adjustment with the activator or, even worse, the control adjustment made is in the false direction. Further, measures as described above which are intended for improving this situation, i.e. regularly checking the patient's reactions to changes in the treatment of the patient, are laborious and can be annoying for the patient. For this and other reasons, the acceptance of the physiological closed loop systems is still low.

SUMMARY OF THE INVENTION

It is the object of the invention to provide such a system and method for automatically controlling a physiological variable of a patient in a closed loop which are more efficient and reliable.

This object is achieved by a closed loop system for automatically controlling a physiological variable of a patient, with

a measuring unit for measuring a direct or an indirect value for the physiological variable of the patient, and

an actuator for treating the patient in order to affect the physiological variable, wherein

the actuator is adapted for being controlled by the value measured by the measuring unit and an additional value.

In this context, the term "patient" does not only apply to human beings but also to animals. Further, the term "patient" does not mean that the respective person/animal is disease-ridden and, thus, also healthy persons who make part of a medical system which is controlled by a closed loop will be referred to as "patients".

Further, the term "physiological variable" refers to a specific variable describing the patient's condition with respect to a specific physiological state, i.e. the patient's blood hemoglobin saturation, while the term "value" or "value for the

physiological variable" refers to a specific measure or indicator which is characteristic for the "physiological variable" and, thus, can also be an indirect measure, i.e. the varying part of the absorption spectrum of a pulse oximeter measurement in case of blood hemoglobin saturation.

According to the invention, it is an essential idea that - additionally to the physiological variable measured with the measuring unit - at least one more value is used to control the treatment of the patient. This way, a more reliable feedback loop is established since feedback on one value can be balanced by the feedback on the other value.

For that, different additional values can be used. However, according to a preferred embodiment of the invention, the additional value is a value of a variable of the patient. This means that the additional value also reflects one or the other physiological variable of the patient.

According to a preferred embodiment of the invention, an additional measuring unit for measuring the additional value is provided. Thus, the additional value is a measurable value. According to an alternative preferred embodiment of the invention, an input unit for manually inputting the additional value is provided. This way, also non-measurable values, like values being characteristic for the medication of the patient, can be considered.

It can be advantageous that the additional value reflects another physiological variable of the patient. However, according to a preferred embodiment of the invention, the additional value is another direct or an indirect value for the same physiological variable of the patient which is measured with the measuring unit. In other words, according to this preferred embodiment, a different measurement of the same variable is performed. This means that the additional value reflects the same actual physical variable of the patient as the variable measured with the measuring unit, however, measured in a different way. Accordingly, this preferred embodiment of the invention introduces redundancy in order to achieve an even more reliable feedback with respect to the respective physiological variable of the patient.

Above mentioned object is also achieved by a method for automatically controlling a physiological variable of a patient in a closed loop system, comprising the

following steps:

automatically measuring a direct or an indirect value for the physiological variable of the patient, and

automatically treating the patient in order to affect the physiological variable, wherein

the treatment is controlled by the value measured and an additional value.

Preferred embodiments of the method according to the invention result from the preferred embodiments of the system according to the invention as described above.

Especially, according to a preferred embodiment of the invention, the additional value is a value of a variable of the patient.

Further, according to a preferred embodiment of the invention, the additional value is automatically measured. Alternatively, according to a preferred embodiment of the invention, it is automatically requested to input the additional value manually.

According to another preferred embodiment of the invention, the additional value is a different direct or an indirect value of the same physiological variable of the patient.

In other words, it is an important idea of the invention to use more than just a single signal input to the control algorithm to achieve a better and more adequate feedback on the patient's condition. This feedback is preferably based on several of the following inputs:

1. The main physiological variable to be controlled.
2. Other (possibly indirect) patient variables that depend on the patient variable which is to be controlled.
3. Patient size and/or weight.
4. General patient state based on history, known diseases etc.
5. Current patient state like sleeping vs. awake, patient stress, fear etc.
6. Procedures the patient is currently going through, like feeding, physiotherapy,
   patient washing etc.
7. Patient medication that might have influence to how to adjust the

actuator.

BRIEF DESCRIPTION OF THE DRAWINGS

These and other aspects of the invention will be apparent from and elucidated with reference to the embodiments described hereinafter.

In the drawings:

Fig. 1 is a schematic depiction of a closed loop system for automatically controlling a physiological variable of a patient according to a first preferred embodiment of the invention, and

Fig. 2 is a schematic depiction of a closed loop system for automatically controlling a physiological variable of a patient according to a second preferred embodiment of the invention.

DETAILED DESCRIPTION OF EMBODIMENTS

For elucidation of the principles of the invention in the following description a closed loop system is used as an example that controls the SaO2 value of a neonatal patient by adjusting the FiO2 concentration of the gas mixture that is provided to the patient.

The invention is a multi-input closed loop system that uses at least two of the following inputs to control one or more physiological variables of a living body:

1. The physiological variable to be controlled, either direct or by a physiological measurement that is intended to represent this physiological variable. According to the present example, the SpO2 value of the patient is used as representation of the patient's SaO2.
2. Another, possibly indirect, physiological variable that depends on the physiological variable that is to be controlled. According to the present example, arterial oxygen partial pressure PaO2, measured as transcutaneous 0 2 (TcO2) is used.

3. Another physiological variables that provides general information about the patient status. Examples are respiration rate, ECG heart rate, venous oxygen saturation, and blood pressure.

4. Patient size and/or weight as entered by the care giver.

5. General patient state based on history, known diseases. A first example is gestation age of the neonatal patient; a second example is manual entry of a general classification of the airway function.

6. Current patient state like sleeping vs. awake, level of patient motion, patient stress, fear. Examples here are the following: Use of measurements to determine the sleep state (respiration rate and HR), use of measurements to determine the stress state (perfusion index or perfusion change index), determination of the patient's motion state by the use of one or more accelerometers, determination of the patient's motion state by using artifact level evaluation of patient measurements, and manual input by the care giver, like sedation information or patient status scores.

7. Procedures the patient is currently going through like feeding, physiotherapy, patient washing, patient transport etc. Examples for that are: Manual input by the care giver if a certain procedure is started or completed. As a safeguard the state could automatically return to "completed" after are pre-defined period of time. Another example is the determination of the transport state by the use of one or more accelerometers. Finally, another example is the determination of the patient's position (sitting vs. laying) by the use of one or more accelerometers.

8. Patient medication that might have influence on to how to adjust the actuator. Examples are: Manual input by the care giver for medication and automatic access of the system to the medical record of the patient.

From Fig. 1, a schematic depiction of a first preferred embodiment of the invention can be seen. This closed loop system is adapted for automatically controlling the SpO2 value as a physiological variable of a patient 1. For that, an actuator 2 is provided which is controlled by a controller unit 5 in which the control algorithm is implemented. This controller unit 5 is fed with two values which are measured with a first measuring unit 3 and a second measuring unit 4, respectively. In detail, the first

measuring unit 3 is adapted for directly measuring the SpO2 value of the patient 1, while the second measuring unit 4 is adapted for measuring arterial oxygen partial pressure PaO2, measured as transcutaneous 0 2 (TcO2). Thus, the second measuring unit 4 provides for another, in this case indirect, physiological variable that depends on the physiological variable that is to be controlled. Both signals, i.e. SpO2 and PaO2 are brought together in the controller unit 5 and, there, used for adequate feedback in order to control the patient's SpO2.

According to an alternative preferred embodiment of the invention which can be seen from Fig. 2, instead of the second measuring unit 4, a manual input device 6 is provided. This manual input device 6 is adapted for inputting information which are more difficult or elaborate to measure like the procedures the patient is currently going through. Such procedures might include: feeding, physiotherapy, patient washing, patient transport etc. This means that according to this preferred embodiment of the invention, the care giver manually inputs via manual input device 6 if a certain procedure is started or completed.

The inventions can be used in various (closed loop) control systems. One of ordinary skill in the art will recognize that the purpose of controlling is not limited to a single type of control loop and includes several variations and different implementations of control loops, e.g. closed loop controls, supervised controls and open loop controls. Further, it is clear that more than two values can be used for improved feedback. For example, the closed loop control systems according the first and second preferred embodiment of the invention, respectively, could be combined, thus, generating feedback based on two measured and one manually input value.

Examples for control loops which can be used with the invention are:

- FiO2 control (see detailed example above)
- Infusion pumps medication control (e.g. to control the blood pressure of a patient)
- Control for depth of anaesthesia (e.g. control of intravenous - aesthetic agents during non-volatile anaesthesia procedures)
- Glycemic control

One of ordinary skill in the art will appreciate many variations and modifications within the scope of this invention. This method and system will be used

mainly for hospitalized patients, but there are also applications possible for mobile patients in the hospital environment, during transport or at home. Also devices could make use of this invention that are intended for healthy persons or even animals.

While the invention has been illustrated and described in detail in the drawings and foregoing description, such illustration and description are to be considered illustrative or exemplary and not restrictive; the invention is not limited to the disclosed embodiments.

Other variations to the disclosed embodiments can be understood and effected by those skilled in the art in practicing the claimed invention, from a study of the drawings, the disclosure, and the appended claims. In the claims, the word "comprising" does not exclude other elements or steps, and the indefinite article "a" or "an" does not exclude a plurality. The mere fact that certain measures are recited in mutually different dependent claims does not indicate that a combination of these measured cannot be used to advantage. Any reference signs in the claims should not be construed as limiting the scope.

CLAIMS:

1. A closed loop system for automatically controlling a physiological variable of a patient (1), with

a measuring unit (3) for measuring a direct or an indirect value for the physiological variable of the patient (1), and

an actuator (2) for treating the patient (1) in order to affect the physiological variable, wherein

the actuator (2) is adapted for being controlled by the value measured by the measuring unit (3) and an additional value.

2. The closed loop system according to claim 1, wherein the additional value is a value of a variable of the patient (1).

3. The closed loop system according to claim 1 or 2, wherein an additional measuring unit (4) for measuring the additional value is provided.

4. The closed loop system according to claim 1 or 2, wherein an input unit (6) for manually inputting the additional value is provided.

5. The closed loop system according to any of claims 1 to 4, wherein the additional value is a different direct or indirect value of the same physiological variable measured with the measuring unit (3).

6. A method for automatically controlling a physiological variable of a patient in a closed loop system, comprising the following steps:

automatically measuring a direct or an indirect value for the physiological variable of the patient, and

automatically treating the patient in order to affect the physiological variable, wherein

the treatment is controlled by the value measured and an additional value.

7. The method according to claim 6, wherein the additional value is a value of a variable of the patient.

8. The method according to claim 5 or 6, wherein the additional value is automatically measured.

9. The method according to claim 5 or 6, wherein it is automatically requested to input the additional value manually.

10. The method according to any of claims 6 to 9, wherein the additional value is a different direct or an indirect value of the same physiological variable already measured.

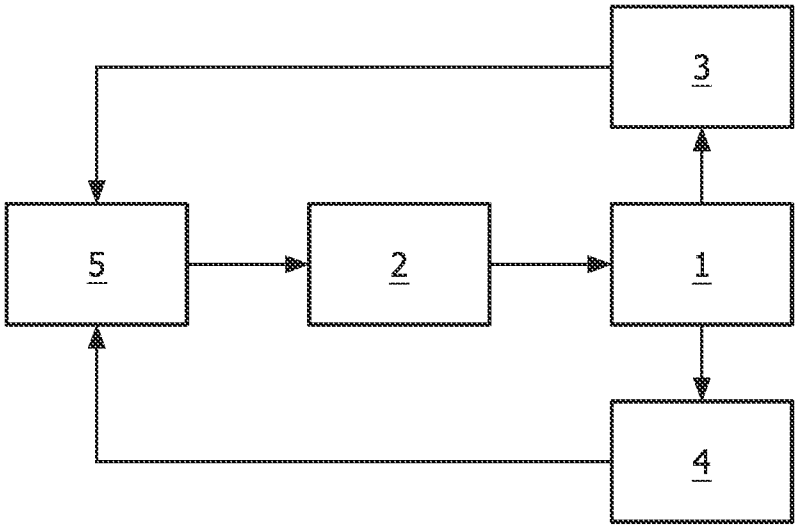

FIG. 1

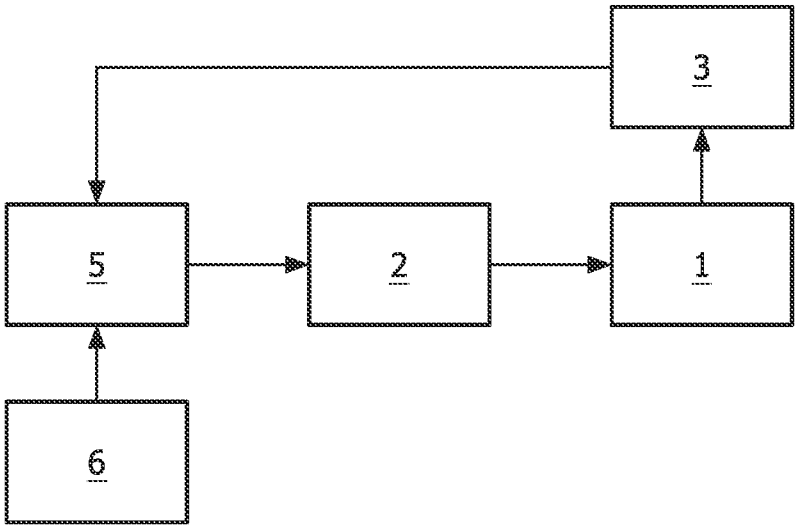

FIG. 2

INTERNATIONAL SEARCH REPORT

International application No
PCT/ÏB2009/051017

A. CLASSIFICATION OF SUBJECT MATTER
INV. A61B5/00 A61B5/083 A61M5/172 A61M16/00

According Io International Patent Classification (IPC) orto both national classification and IPC

B. FIELDS SEARCHED

Minimum documentation searched (classification system followed by classification symbols)
A61B A61M

Documentation searched other than minimum documentation to the extent that such documents are included in the fields searched

Electronic data base consulted during the international search (name of data base and, where practical, search terms used)

EPO-Internal

C. DOCUMENTS CONSIDERED TO BE RELEVANT

Category *	Citation of document, with indication, where appropriate, of the relevant passages	Relevant to claim No.
X	WO 2006/075016 A (NOVO NORDISK AS [DK]; BENGTSSON HENRIK [DK]; KRISTENSEN LEIF ENGMANN [) 20 July 2006 (2006-07-20) page 7, line 21 - page 6, line 6 page 9, lines 13-18 page 13, line 15 - page 14, line 2 page 15, lines 11-26 page 16, lines 7-21 figures Ia, Ib	1-5
X	US 5 365 922 A (RAEMER DANIEL B [US]) 22 November 1994 (1994-11-22) column 4, line 56 - column 5, line 2; figure 1	1,2,4,5
X	US 2006/266355 Al (MISHOLI BOAZ [US]) 30 November 2006 (2006-11-30) columns 18,27,33; figures 1,2	1,2,4,5

-/--

[X] Further documents are listed in the continuation of Box C. [X] See patent family annex.

* Special categories of cited documents :

[1]A[1] document defining the general state of the art which is not considered to be of particular relevance

"E" earlier document but published on or after the international filing date

[1]L[1] document which may throw doubts on priority claim(s) or which is cited to establish the publication date of another citation or other special reason (as specified)

"O[1] document referring to an oral disclosure, use, exhibition or other means

[1]P[1] document published prior to the international filing date but later than the priority date claimed

"T" later document published after the international filing date or priority date and not in conflict with the application but cited to understand the principle or theory underlying the invention

[1]X" document of particular relevance; the claimed invention cannot be considered novel or cannot be considered to involve an inventive step when the document is taken alone

[1]Y" document of particular relevance; the claimed invention cannot be considered to involve an inventive step when the document is combined with one or more other such docu¬ments, such combination being obvious to a person skilled in the art.

"&" document member of the same patent family

Date of the actual completion of the international search	Date of mailing of the international search report
12 June 2009	23/06/2009
Name and mailing address of the ISA/ European Patent Office, P.B. 5818 Patentlaan 2 NL - 2280 HV RijSWiJk Tel. (+31-70) 340-2040, Fax: (+31-70) 340-3016	Authorized officer Lommel , Andre

INTERNATIONAL SEARCH REPORT

International application No
PCT/IB2009/051017

C(Continuation). DOCUMENTS CONSIDERED TO BE RELEVANT

Category*	Citation of document, with indication, where appropriate, of the relevant passages	Relevant to claim No.
X	WO 2006/124716 A (UNIV BOSTON [US]; DAMIANO EDWARD [US]; EL-KHATIB FIRAS [US]) 23 November 2006 (2006-11-23) page 3, lines 18-26; figure 1	1,2,4,5
X	US 2007/173761 A1 (KANDERIAN SAMI S JR [US] ET AL) 26 GuIy 2007 (2007-07-26) paragraphs [0099], [0101], [0168], [0302], [0316], [0328]; figure 1	1-5
X	US 2002/173729 A1 (VIERTIO-OOA HANNA-[FI] ET AL) 21 November 2002 (2002-11-21) paragraphs [0053],. [0059]; figure 3	1-5
X	WO 2005/072792 A (ASPECT MEDICAL SYSTEMS INC [US]; STRUYS MICHEL [BE]; DE SMET TOM [BE];) 11 August 2005 (2005-08-11) page 9, line 17 - page 10, line 11 page 28, lines 9-27 figures 1,6	1-5

INTERNATIONAL SEARCH REPORT

International application No.
PCT/IB2009/051017

Box No. II Observations where certain claims were found unsearchable (Continuation of item 2 of first sheet)

This International search report has not been established in respect of certain claims under Article 17(2)(a) for the following reasons:

1. [X] Claims Nos.: 6-10
because they relate to subject matter not required to be searched by this Authority, namely:

Rule 39.1(iv) PCT- Method for treatment of the human or anjrnal body by therapy

2. [ ] Claims Nos.:
because they relate to parts of the international application that do not comply with the prescribed requirements to such an extent that no meaningful international search can be carried out, specifically:,

3. [ ] Claims Nos.:
because they are dependent claims and are not drafted in accordance with the second and third sentences of Rule 6.4(a):

Box No. III Observations where unity of invention is lacking (Continuation of item 3 of first sheet)

This International Searching Authority found multiple inventions in this international application, as follows:

1. [ ] As all required additional search fees were timely paid by the applicant, this international search report covers allsearchable claims.

2. [ ] As all searchable claims could be searched without effort justifying an additional fees, this Authority did not invite payment of additional fees.

3. [ ] As only some of the required additional search fees were timely paid by the applicant, this international search reportcovers only those claims for which fees were paid, specifically claims Nos.:

4. [ ] No required additional search fees were timely paid by the applicant. Consequently, this international search report is restricted to the invention first mentioned in the claims; it is covered by claims Nos.:

Remark on Protest

[ ] The additional search fees were accompanied by the applicant's protest and, where applicable, the payment of a protest fee.

[ ] The additional search fees were accompanied by the applicant's protest but the applicable protest fee was not paid within the time limit specified in the invitation.

[ ] No protest accompanied the payment of additional search fees.

INTERNATIONAL SEARCH REPORT

Information on patent family members

International application No
PCT/IB2009/051017

Patent document cited in search report		Publication date	Patent family member(s)			Publication date
WO 2006075016	A	20-07-2006	CN	101107025	A	16-01-2008
			EP	1841476	Al	10-10-2007
US 5365922	A	22-11-1994	EP	0504725	A2	23-09-1992
			OP	6105912	A	19-04-1994
US 2006266355	Al	30-11-2006	CA	2609856	Al	30-11-2006
			EP	1893269	A2	05-03-2008
			JP	2008541849	T	27-11-2008
			WO	2006127356	A2	30-11-2006
WO 2006124716	A	23-11-2006	CA	2612714	Al	23-11-2006
			EP	1881786	A2	30-01-2008
			JP	2008545454	T	18-12-2008
			US	2008208113	Al	28-08-2008
US 2007173761	Al	26-07-2007	WO	2008088490	Al	24-07-2008
us 2002173729	Al	21-11-2002	EP	1389953	Al	25-02-2004
			WO	02094099	Al	28-11-2002
			JP	2004527328	T	09-09-2004
WO 2005072792	A	11-08-2005	AU	2005209275	Al	11-08-2005
			BR	PI0507175	A	26-06-2007
			CA	2554407	Al	11-08-2005
			CN	1925883	A	07-03-2007
			EP	1725278	Al	29-11-2006
			JP	2007519487	T	19-07-2007
			MX	PA06008588	A	28-08-2006