United States Patent [19]

Enochian

[11] **3,731,962**

[45] **May 8, 1973**

[54] **LATCH OPERATING MECHANISM FOR BULKHEADS**

[75] Inventor: **Samuel H. Enochian**, Thornton, Ill.

[73] Assignee: **Unarco Industries, Inc.**, Chicago, Ill.

[22] Filed: **Nov. 4, 1971**

[21] Appl. No.: **195,675**

Related U.S. Application Data

[63] Continuation-in-part of Ser. No. 81,294, Oct. 16, 1970, Pat. No. 3,695,656.

[52] **U.S. Cl.** **292/34**, 105/376, 292/36

[51] **Int. Cl.** **E05c 1/06**, E05c 9/16

[58] **Field of Search**.....292/34, 36, 37, 40, 292/43

[56] **References Cited**

UNITED STATES PATENTS

3,330,584	7/1967	Kuellmar	292/36
3,352,257	11/1967	Lehnert	292/36 X
3,575,451	4/1971	Konrad	292/35

Primary Examiner—Robert L. Wolfe

Attorney—Norman Lettvin

[57] **ABSTRACT**

An actuator of multiple latches of a bulkhead is provided with improvement features that insures making the operator of the device cognizant of the condition of the latches, that prevents inadvertent swinging of a handle that could result in damage, that brings about improved movement of linkages that operate the latches, and which permits of reduced servicing costs in the event repair is required.

9 Claims, 8 Drawing Figures

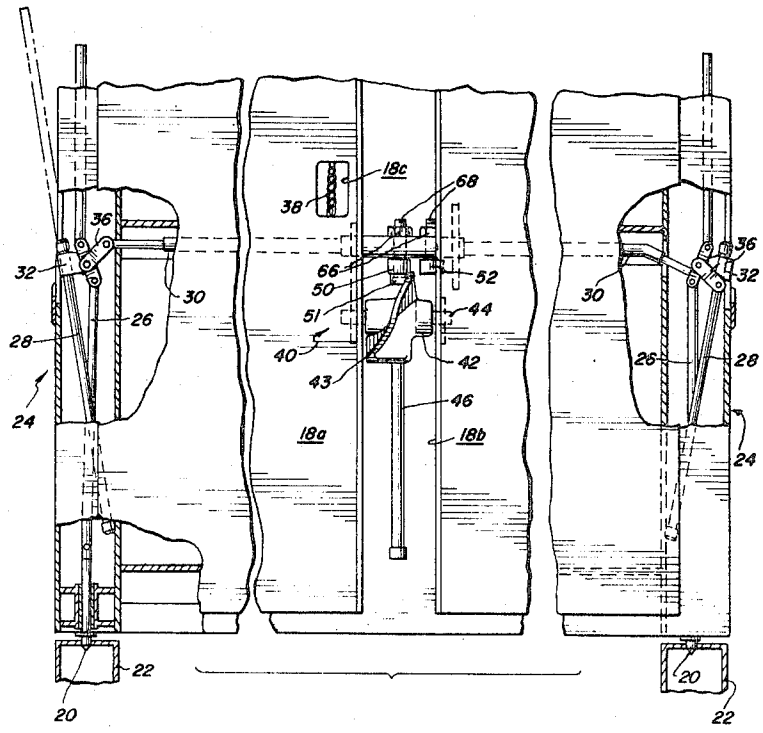

FIG. 1

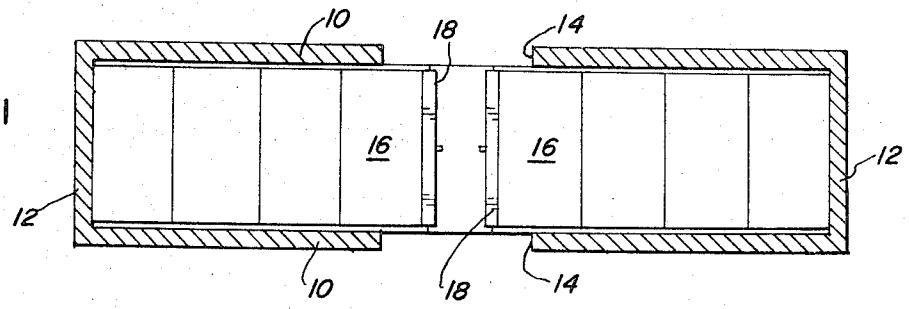

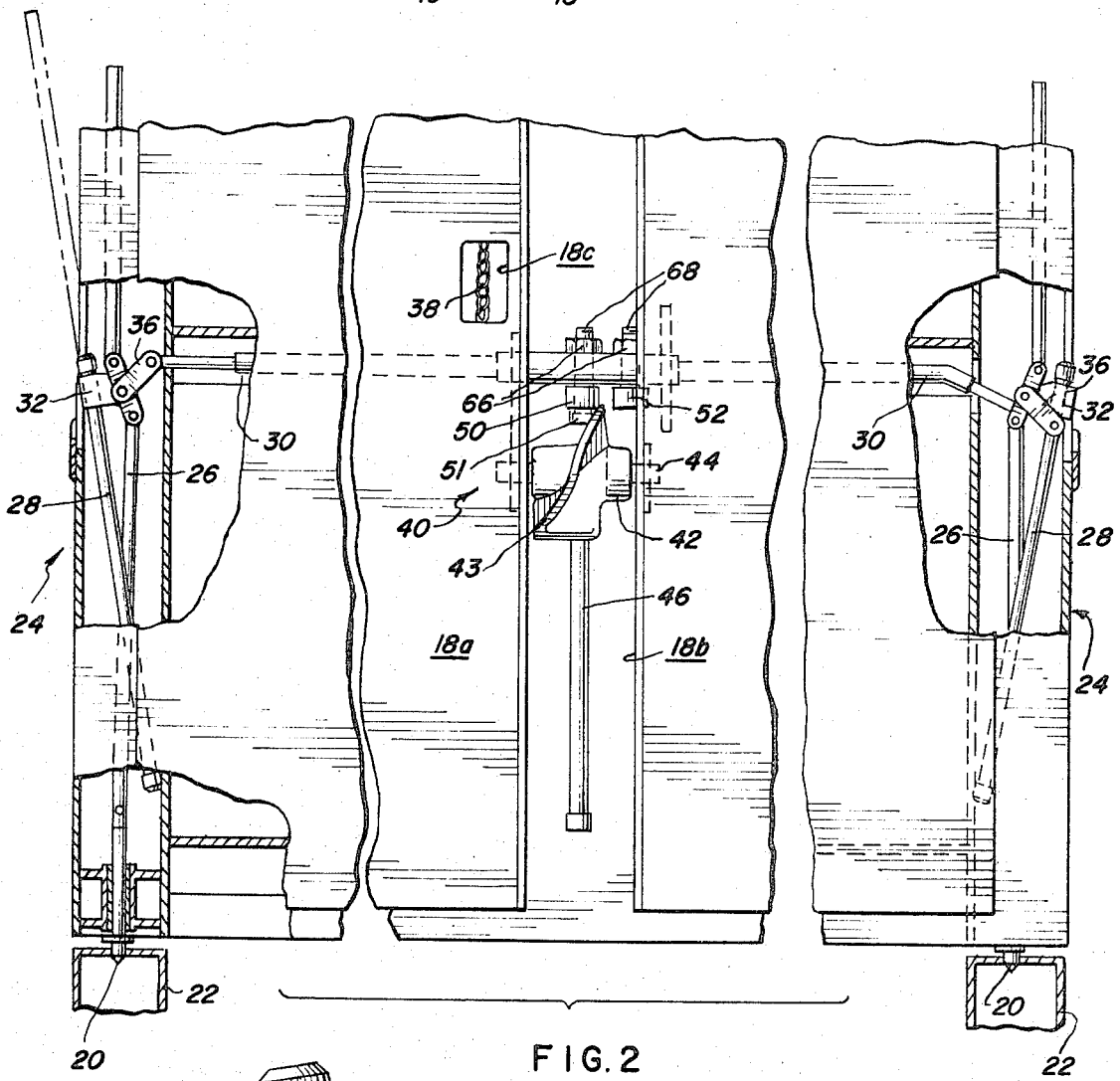

FIG. 2

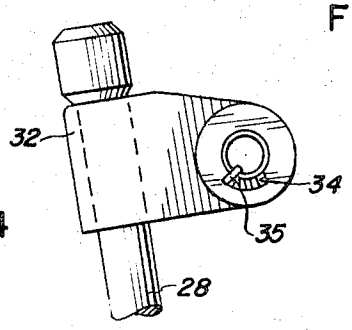

FIG. 4

FIG. 5

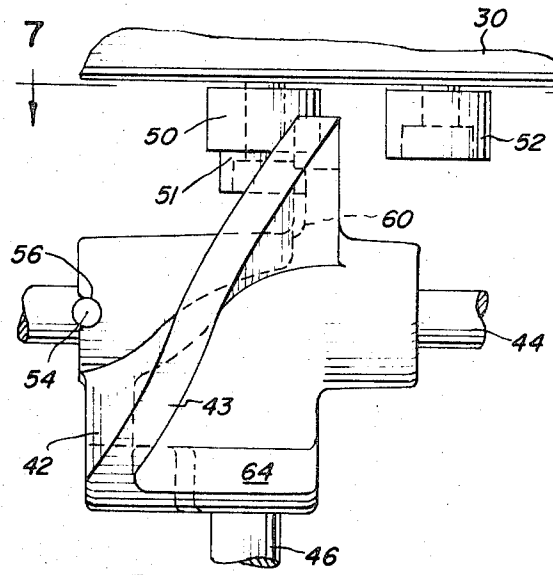

FIG. 3

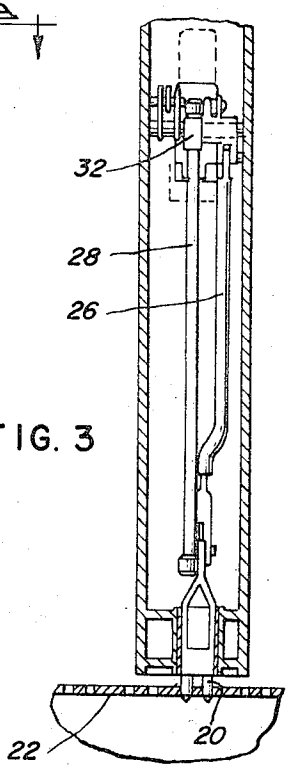

FIG. 6

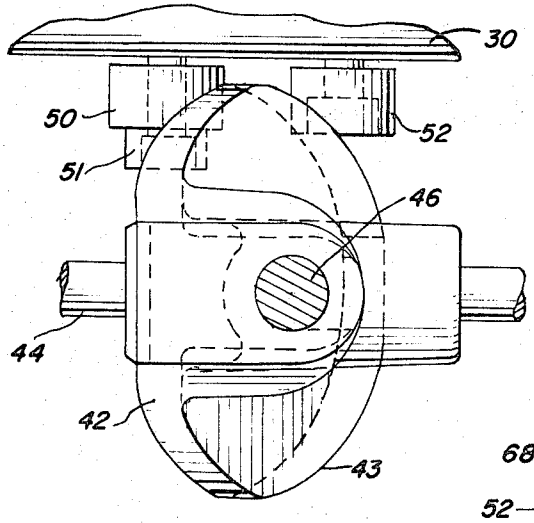

FIG. 7

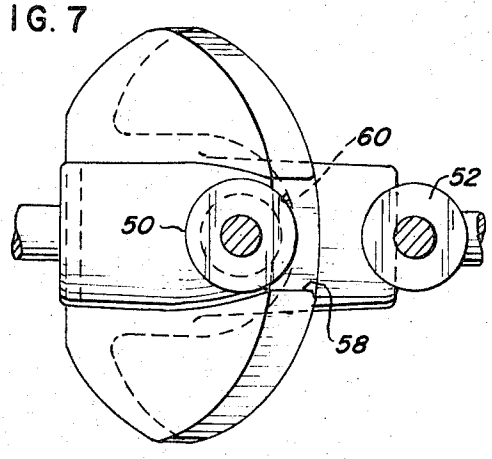

FIG. 8

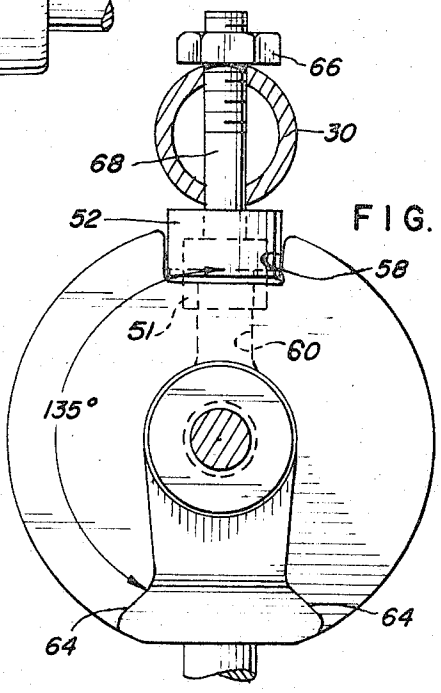

LATCH OPERATING MECHANISM FOR BULKHEADS

CROSS REFERENCE TO RELATED APPLICATION

This application is a Continuation-in-part of U.S. Pat. application Ser. No. 81,294, filed Oct. 16, 1970 and now U.S. Pat. No. 3,695,656.

BACKGROUND OF THE INVENTION

This invention relates to a device for operating the latching mechanism that is normally provided on a bulkhead used as a space divider in freight-carrying bodies such as railway box cars and the like.

As noted in the parent application, Ser. No. 81,294, link mechanisms for simultaneously actuating multiple latches on bulkheads are disclosed in U.S. Pat. Nos. 3,168,055 and 3,330,584 and an improvement in such prior art is disclosed in providing a third handle located between the upright edges of the bulkhead and cooperatively arranged with the cross bar, that interconnects the multiple latches, so as to longitudinally reciprocate the cross bar by swinging action of the third handle in a direction transverse to the plane of the bulkhead.

In the improved construction previously disclosed, the bias of spring means was relied upon to restore certain operative portions of the system to their normal condition. However, under certain conditions, wherein the latch elements are not fully latched, it is possible that all portions of the system are not restored to their normal condition and the operator would be unaware of such condition since the third handle could be restored to its normal position stored away in the bulkhead. This could provide two safety problems, namely the bulkhead would not be properly latched and could move to cause an unsafe condition, and the third handle would be free to move and under certain conditions could swing transversely outwardly of the bulkhead to cause an unsafe condition to lading or personnel.

It is therefore an object of this invention to provide a safety actuator in which the latch pins and the third handle mechanism are positively interconnected so that the handle cannot be stored away unless the latch pins have been fully extended to a locking position. This interconnection assures positive latching of the bulkhead and also indicates to the operator when the bulkhead is not latched.

Another object of this invention is to provide means for holding the handle in an inoperative stored away position when the latch pins are fully extended.

Other objects of the invention are: (a) to provide a positive connection between the cross bar and the third handle when the third handle is operated and to permit movement of the cross bar relative to the third handle when the side handles are operated; (b) to provide for greater lateral movement of the reciprocating cross bar; and (c) to provide an actuator which is readily serviceable in the event of the need for repair or replacement.

Further purposes and objects of this invention will become apparent from the following explanation of the invention, which is provided in the detailed description and claims, and illustrated in the accompanying drawings.

SUMMARY OF THE INVENTION

There is provided by this invention a latch pin actuator which operates in association with a horizontally movable cross bar wherein a third handle mechanism is provided with means for positively moving the cross bar in the direction for retracting the latch pins from the latching position and for positively moving the cross bar in the opposite direction for extending the latch pins into the latching position. By virtue of this mechanism the handle will remain in a position transverse to and projecting from the bulkhead if the latch pins do not assume their latched position. This immediately notifies the operator that the bulkhead is not latched and permits him to positively extend the latch pins for engagement by manipulation of the third handle or to take other corrective steps. In the embodiment shown herein the third handle mechanism includes a camming member having a flange-like camming surface and an operating handle. The member is mounted to the bulkhead for rotation about an axis parallel to the axis of the cross bar. Since the third handle mechanism is separate from the cross bar it may be readily serviced and the flange type of camming surface can be provided with numerous shapes for controlling the distance through which the cross bar will reciprocate. Cam-following means mounted to the cross bar are provided for engaging either side of the camming surface to assure positive connection between the third handle and the cross bar for positively extending the latch pins for engagement and also for holding the handle in an extended position so as to indicate to the operator that the latch pins have not been extended.

Means are also provided in association with the cam member to hold the third handle in a stored away position when the pins are latched.

BRIEF DESCRIPTION OF THE DRAWINGS

FIG. 1 is a diagrammatic plan view of a typical railroad freight car equipped with a bulkhead that embodies this invention;

FIG. 2 is a fragmentary, enlarged and partially sectioned elevational view of a bulkhead, showing the safety actuator;

FIG. 3 is a fragmentary, enlarged and partially sectioned view of an upright side edge as viewed looking from the right of FIG. 2;

FIG. 4 is an enlarged detailed view of a lost motion connection at one of the operating handles located at the side edge of the bulkhead;

FIG. 5 is an enlarged and fragmentary elevational view showing details of the cam member and cam followers associated with the third handle and cross bar for reciprocating the cross bar;

FIG. 6 is a view similar to FIG. 5 depicting the cam member rotated 90° upwardly and illustrating the displacement of the cam followers and cross bar resulting therefrom;

FIG. 7 is a fragmentary sectional view taken substantially along line 7 — 7 of FIG. 5 and depicting the positioning of the cam followers and the camming surface when the third handle actuator is in the inoperative position; and

FIG. 8 is an enlarged fragmentary and sectional view looking from the right of FIG. 5 and illustrating additional details of the construction.

DESCRIPTION OF THE PREFERRED EMBODIMENT

Referring now to the drawings, FIG. 1 illustrates a typical environment for a bulkhead that embodies the invention. Thus, a railway boxcar is shown in plan as including side walls 10, end walls 12, door openings 14, lading 16 and space-dividing bulkheads 18 that are movable longitudinally in the car and operate to hold lading 16 in position. As disclosed in the said U.S. Pat. Nos. 3,168,055 and 3,330,584, each bulkhead 18 is provided with latch pins 20 at the corners of the bulkhead adapted to be reciprocated between a position of latching engagement with fixed structure 22 on the car and an unlatched position.

Each bulkhead 18 includes end post structure 24 at each upright edge with link means 26 therein connected to the latch pins 20. A handle 28 is arranged to swing in the plane of bulkhead 18 to actuate the link means 26 that includes a substantially horizontal cross bar 30 that extends through bulkhead 18 and interconnects the link means 26 and handles 28 in the two end posts. Each handle 28 is slidable in a sleeve 32 between full line position of storage and a broken line position of use where it serves as a lever to multiply the applied force to facilitate withdrawal of the latch pins 20. Each sleeve 32 is arcuately apertured at 34, as seen in FIG. 4 to provide a lost motion connection between sleeve 32 and an abutment 35 that is arranged to operate a link 36 that connects to cross bar 30. Thus far, the structure herein described is of the type disclosed in full detail in U.S. Pat. No. 3,330,584, and by this reference to such disclosure in the prior art the same is adopted by reference herein and made a part hereof. The latch pins are normally spring biased toward a latching position. When the latch pins 20 are in latching position, the cross bar 30 is at its furthermost position to the right as viewed in FIG. 2. Any manipulation of either handle 28 will tend to move cross bar 30 to the left from the position shown in FIG. 2 for purposes of effecting unlatching of all the latch pins 20.

The third handle 40 which is added by the instant invention to the structure disclosed is illustrated in FIG. 2. The bulkhead 18 is shown to include opposite side panels 18*a* that operate to enclose the frame structure of the bulkhead. Preferably such panels 18*a* are of sheet metal although such cover panels may be of any appropriate material. Centrally between the edges of the bulkhead, each panel 18*a* has a cut-out portion or access portion 18*b*. The panel 18*a* has a second opening, or aperture, 18*c* for manual access to an inching fall chain 38 of a type similar to that disclosed in U.S. Pat. No. 3,168,055.

The third handle mechanism 40, for reciprocating the cross bar 30 includes a cam member 42 having an integral transversely extending camming flange 43. The cam member 42 is rotatably mounted on the shaft 44 for movement within the access portion 18*b* and about an axis spaced below and generally parallel to the cross bar 30.

A handle 46 is mounted to the cam member and serves as a lever to multiply the applied force for facilitating the movement of the cross bar 30. A pair of spaced roller-type cam followers 50 and 52 are mounted to the cross bar and positioned for engagement with opposite sides of the camming flange 43 when cam 42 is out of its normal position. A third roller-type cam follower is provided at 51, coaxially of and below cam follower 50.

As seen in FIG. 5 the camming member 42 is secured to the shaft 44 to pivot about the axis thereof. A lock pin or bolt 54 carried by shaft 44 engages recess 56 in cam member 42 to provide an operative connection therebetween. The flange 43, both sides of which act as camming surfaces, extends as a segment of a helix from the body of the member 42.

The profile or shape of the camming flange 43 is selected to obtain the desired logitudinal movement of cross rod 30. When cam member 42 is in its normal position as seen in FIGS. 2 and 5, the handle 46 extends vertically downwardly within the confines of the bulkhead 18, and 180° away from handle 46 the flange 43 is cut away to provide a pass-through slot 58. Directly below slot 58 and in the side of flange 43 facing cam follower 50 there is provided a dwell recess 60 having a radius of curvature that is smaller than the radius of curvature of adjacent portions of the helical cam flange 43.

The radius of curvature of the third cam follower 51 is selected to be less than the radius of curvature of cam follower 50 and the radius of curvature of follower 51 and recess 60 are selected to provide a dwell engagement therebetween which operates to normally maintain the handle 46 in its vertical stored-away position in FIGS. 2 and 5. In the normal position the followers 50 and 52 are aligned with the pass-through slot 58, which slot is of greater dimension than either of followers 50 and 52. This arrangement permits movement of cross rod 30 under manipulation of handles 28. When the latches are fully extended, cross rod 30 is at its furthermost position to the right as viewed in FIG. 2, then cam follower 51 is seated in dwell recess 60.

Now, when the latch pins 20 are to be retracted, the handle 46 is grasped and swung upwardly, which causes the cam follower 51 to be unseated from its dwell position in recess 60 while simultaneously moving the radial outer portion of camming flange 43 to slide against the roller 50. Further rotation of cam 42 causes follower 50 and cross rod 30 to move to the left as seen in FIGS. 2 and 5.

The pitch, or effective axial length of the operative portion of cam flange 43 is selected to provide the desired longitudinal movement of cross bar 30. The terminus of the effective axial length of flange 43 is defined by stop shoulders that are positioned to engage the second cam follower 52. The shoulders can be positioned wherever desired so as to vary the amount of rotation necessary in order to move the cross bar 30 and hence attain the desired displacement of the bar. In the embodiment shown, the handle and camming member 42 are to be rotated about 135° as indicated in FIG. 8 to achieve the desired cross bar displacement. However, there is no reason that the stop or limiting shoulders 64 cannot be positioned so as to limit rotation of cam 42 to 90°, or to permit rotation as much as 170°. Comparing FIGS. 5 and 6 which locates the camming member 42 in vertically aligned relationship,

one is able to see how in FIG. 6 the cross bar 30 and the cam followers 50 and 52 have been displaced to the left as compared to FIG. 5.

After the latch pins 20 have been retracted and the bulkhead 18 is positioned against the lading 16, the handle 46 is then rotated downwardly toward its normal position of FIG. 2 to permit the latch pins to be extended by allowing the cross bar 30 to move to the right under the spring-biasing forces. The spring-biasing forces nOrmally would hold the roller 50 against the flange 43 as the handle 46 is rotated downwardly. But in the event that the pins are obstructed, or the spring-biasing forces are insufficient to move the cross bar 30, then continued downward swinging of the handle causes the flange 43 to disengage from the roller 50 and the backside of flange 43 then moves to engage the roller 52. The spacing between the opposed surfaces of rollers 50 and 52 is sufficiently slightly greater than the thickness of the flange to permit normal swinging of the flange 43 between said followers, and so that there is only slight pivotal movement of the handle 46 between positions where roller 50 is disengaged and roller 52 is engaged. In this situation the handle 46 still projects outwardly from the plane of the bulkhead 18, thus clearly indicating that the latch pins 20 have not been fully extended and that the bulkhead is not yet latched in position. The alerted operator then can either continue downward movement of handle 46 if the situation permits, or he may move the bulkhead so as to properly align the latch pins with latching recesses and then continue pushing downwardly on the handle 46 until handle 46 reaches its normal vertical position. If the operator cannot restore handle 46 to its normal position then he knows that something needs correction and thus the handle serves as a means to alert the operator to unsafe conditions.

When the handle 46 has been rotated fully downwardly to the inoperative position the spring-biasing action urges the third cam follower 51 into engagement with the dwell recess 60 so as to maintain the handle 46 and the camming member 42 in the inoperative stored position and to prevent inadvertent swinging of handle 46 outwardly of the bulkhead.

As the cross bar 30 reciprocates, under the actuation of third handle mechanism the lost motion connections 34 operate to keep the side handles 28 in their inoperative positions.

When the third handle mechanism 40 is in the stored-away position the latch pins may be retracted and extended by means of the side handles 28. This is done by positioning the handles 28 for operation, as indicated by the broken lines, and swinging the handles downwardly which urges the cross bar 30 to the left. As the cross bar 30 moves to the left the rollers 50 and 52 also move to the left. When the cam member 42 is in the stored-away position the slot 58 and roller 52 are aligned so that the roller 52 can move through the slot 58. This permits the cross bar to freely reciprocate to the left and right as it is operated by the handles 28 when the third handle mechanism 40 is in the stored-away and inoperative position. As seen in FIG. 7 the follower 52 moves to the left and through the slot 58 as the latch pins are retracted and to the right back through the slot as the pins are extended. Movement of the cross bar to the right continues until the follower 51 engages the recess dwell 60.

Referring back to FIG. 1, in the event that it is necessary to repair the third handle mechanism 40, it will be appreciated that the repairs can be made quite readily since the cam member 42 and and handle 46 can be readily removed from the bulkhead. If the cam followers 50, 51, or 52 are to be removed from the cross bar this can be done by disengaging the nuts, such as 66, which engage the studs, such as 68, by which the followers are mounted to the cross bar. Thus repair of the actuator can be achieved without disassembling the cross bar or latching system. It will be appreciated that numerous modifications and changes can be made to the embodiment disclosed herein without departing from the spirit and scope of this invention.

What is claimed and desired to be secured by Letters Patent of the United States is:

1. In an actuator of multiple latch pins on a bulkhead utilizing a substantially horizontal reciprocating cross bar for tying together all the latch pins for simultaneous actuation, and a handle and lost motion connection for the handle at each upright edge of the bulkhead arranged to permit each handle to manipulate the latch pins and cross bar without actuating the other handle, the improvement of a third handle located between the said upright edges of the bulkhead, and movable transversely of the bulkhead between an inoperative position wherein the latch pins are unlatched, means operatively associated with the third handle and cross bar to effect a positive movement of the cross bar as the handle swings in both directions between the inoperative position and the operative position.

2. An actuator as in claim 1 wherein said means operatively associated with the third handle and cross bar comprise cam following means mounted to said cross bar, and cam means being arranged to engage said cam following means for reciprocating said cross bar in both directions.

3. An actuator as in claim 2 wherein said cam means are mounted to said bulkhead for rotation about an axis substantially parallel to said cross bar.

4. An actuator as in claim 3 wherein said cam means includes means defining a curved camming flange which extends transverse to the axis of rotation.

5. An actuator as in claim 4 wherein said cam following means comprises means for engaging one side of said flange as said cam is rotated in one direction and means engageable with the other side of said flange as the cam is rotated in the opposite direction.

6. An actuator as in claim 5 wherein said cam following means comprise a pair of rollers mounted in closely spaced relation to each other on said cross bar and arranged to engage opposite sides of said flange.

7. An actuator as in claim 1 wherein means are provided in association with said cross bar for engaging said means operatively associated with said third handle for maintaining said handle in a stored-away position.

8. An actuator as in claim 6 wherein one of said cam-following rollers includes a small radius of curvature roller and said flange means are provided with a dwell recess adapted to receive said small roller to maintain said handle in a downwardly vertical stored-away position.

9. An actuator as in claim 5 wherein said flange means are provided with pass-through slot, said slot being arranged to permit one of said cam followers to

pass there-through when said third handle is in a stored-away position and said latch pins are actuated by one of the upright edge positioned side handles.

* * * * *