(12) INTERNATIONAL APPLICATION PUBLISHED UNDER THE PATENT COOPERATION TREATY (PCT)

(19) World Intellectual Property Organization
International Bureau

(43) International Publication Date
14 October 2010 (14.10.2010)

PCT

(10) International Publication Number
WO 2010/115656 A1

(51) International Patent Classification:
B64C 21/02 (2006.01) *F01D 5/14* (2006.01)

(21) International Application Number:
PCT/EP2010/052265

(22) International Filing Date:
23 February 2010 (23.02.2010)

(25) Filing Language: English

(26) Publication Language: English

(30) Priority Data:
0905941.1 6 April 2009 (06.04.2009) GB

(71) Applicant *(for all designated States except US)*: **ROLLS-ROYCE PLC** [GB/GB]; 65 Buckingham Gate, London SW1E 6AT (GB).

(72) Inventor; and

(75) Inventor/Applicant *(for US only)*: **MASON, Samuel Alexander** [GB/GB]; Rolls-Royce plc, PO Box 31, Derby Derbyshire DE24 8BJ (GB).

(74) Agents: **LITTLE, Thomas** et al.; PO Box 3, Filton, Bristol South Gloucestershire BS34 7QE (GB).

(81) Designated States *(unless otherwise indicated, for every kind of national protection available)*: AE, AG, AL, AM, AO, AT, AU, AZ, BA, BB, BG, BH, BR, BW, BY, BZ, CA, CH, CL, CN, CO, CR, CU, CZ, DE, DK, DM, DO, DZ, EC, EE, EG, ES, FI, GB, GD, GE, GH, GM, GT, HN, HR, HU, ID, IL, IN, IS, JP, KE, KG, KM, KN, KP, KR, KZ, LA, LC, LK, LR, LS, LT, LU, LY, MA, MD, ME, MG, MK, MN, MW, MX, MY, MZ, NA, NG, NI, NO, NZ, OM, PE, PG, PH, PL, PT, RO, RS, RU, SC, SD, SE, SG, SK, SL, SM, ST, SV, SY, TH, TJ, TM, TN, TR, TT, TZ, UA, UG, US, UZ, VC, VN, ZA, ZM, ZW.

(84) Designated States *(unless otherwise indicated, for every kind of regional protection available)*: ARIPO (BW, GH, GM, KE, LS, MW, MZ, NA, SD, SL, SZ, TZ, UG, ZM, ZW), Eurasian (AM, AZ, BY, KG, KZ, MD, RU, TJ, TM), European (AT, BE, BG, CH, CY, CZ, DE, DK, EE, ES, FI, FR, GB, GR, HR, HU, IE, IS, IT, LT, LU, LV, MC, MK, MT, NL, NO, PL, PT, RO, SE, SI, SK, SM, TR), OAPI (BF, BJ, CF, CG, CI, CM, GA, GN, GQ, GW, ML, MR, NE, SN, TD, TG).

Published:

— *with international search report (Art. 21(3))*

(54) Title: A FLOW CONTROL DEVICE FOR CONTROLLING A FLUID FLOW OVER A SURFACE

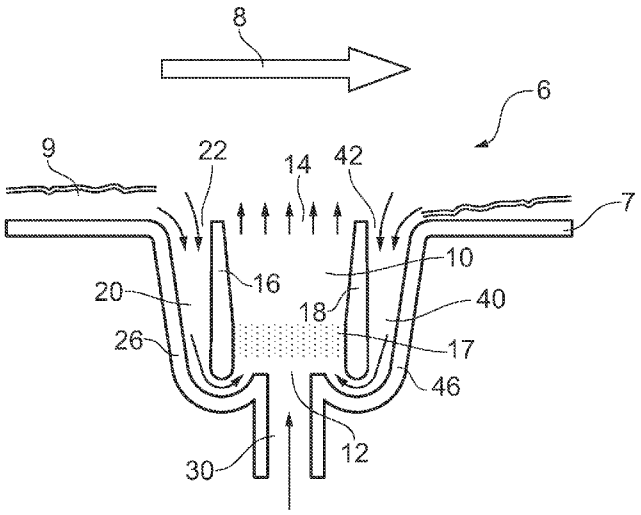

FIG. 2

(57) Abstract: A flow control device (6) for controlling a fluid flow over a surface (7), wherein the flow control device comprises: a first passage (10) comprising a first inlet (12) and an outlet (14), the outlet (14) being disposed on the surface (7), and wherein the first passage (10) comprises a Venturi; a second passage (20) comprising a second inlet (22), the second inlet (22) being disposed on the surface (7); and a third passage (30) for receiving a fluid flow from a flow source; wherein the first, second and third passages are arranged such that the second and third passages feed into the first inlet of the first passage and that, in use, a portion of the fluid flow over the surface is drawn into the second passage, mixes with the fluid flow from the flow source received via the third passage, and exits the outlet disposed on the surface via the first passage.

WO 2010/115656 A1

A FLOW CONTROL DEVICE FOR CONTROLLING A FLUID FLOW OVER A SURFACE

This invention relates to a flow control device for controlling a fluid flow over a surface and particularly but not exclusively relates to a flow control device comprising an ejector.

It is known that flow control devices may be used to control and manipulate boundary layer flows over surfaces. This is usually done with the intention of increasing the aerodynamic efficiency of the surface, which may for example, be part of a duct, aerofoil, or wing. Typically a very small flow rate of control fluid is used to 'control' the mainstream flow.

There are essentially two different classes of flow control device. Firstly, as shown in Figure 1a, there are flow control devices which use blowing by virtue of a high pressure air source 2. With such a device, momentum is effectively injected locally into the adjacent boundary layer. This process allows the boundary layer to overcome larger adverse pressure gradients than would otherwise have been possible, thereby preventing or delaying flow separation and reducing drag.

Secondly, as shown in Figure 1b, there are flow control devices which use sucking by virtue of a vacuum chamber 4. With such devices the adjacent boundary layer is sucked from the surface. This process allows a new (initially laminar) boundary to form and grow, with reduced skin friction downstream.

With the first class of flow control device it is necessary to increase the amount of momentum that the flow control device delivers to the adjacent boundary layer to increase its effectiveness. This may be achieved by increasing the pressure of the control fluid. However, this requires additional energy input, which is undesirable.

Furthermore, in engineering applications a higher pressure reservoir may not be available. Similarly, the effectiveness of the second class of flow control device may be increased by increasing the suction rate. This is also undesirable since the control fluid is degraded by this process, and becomes less useful for doing mechanical work. This requires an additional energy input and so is also undesirable.

The present invention therefore seeks to address these issues.

According to a first aspect of the present invention there is provided a flow control device for controlling a fluid flow over a surface, wherein the flow control device comprises: a first passage comprising a first inlet and an outlet, the outlet being disposed on the surface; the first passage comprises a Venturi; a second passage comprising a second inlet, the second inlet being disposed on the surface; and a third passage for receiving a fluid flow from a flow source; wherein the first, second and third passages are arranged such that the second and third passages feed into the first inlet of the first passage and that, in use, a portion of the fluid flow over the surface is drawn into the second passage, mixes with the fluid flow from the flow source received via the third passage, and exits the outlet disposed on the surface via the first passage.

The second inlet disposed on the surface may be immediately adjacent to the outlet disposed on the surface. At least a portion of the second inlet may be arranged on the surface so as to be downstream of the outlet with respect to the fluid flow over the surface. Alternatively, the second inlet may be arranged on the surface so as to be upstream of the outlet with respect to the fluid flow over the surface.

The first passage and/or outlet may be formed by a first slot in the surface. The second passage and/or second inlet may be formed by a second slot in the surface. The third passage may be formed by a third slot. One ore more of the first, second and third slots may be substantially longitudinal.

The flow control device may further comprise a fourth passage comprising a fourth inlet disposed on the surface. The fourth passage may be arranged such that the fourth passage feeds into the first inlet of the first passage. The fourth passage and/or fourth inlet may be formed by a fourth slot in the surface. The fourth slot may be substantially longitudinal. The fourth inlet may be arranged on the surface so as to be downstream of the outlet with respect to the fluid flow over the surface. The fourth inlet disposed on the surface may be immediately adjacent to the outlet disposed on the surface.

The second inlet may be arranged such that the second inlet substantially surrounds the outlet on the surface. The second inlet may encircle the outlet on the surface. The second inlet and/or second passage on the surface may be formed by a substantially continuous slot surrounding the outlet on the surface.

The flow control device may comprise an ejector or injector.

A gas turbine engine may comprise the flow control device as described above.

According to a second aspect of the present invention there is provided a method of controlling a flow over a surface using a flow control device, the method comprising: providing a second fluid flow into the flow control device from a second inlet disposed on the surface; providing a third fluid flow into the flow control device from a flow source; mixing the second fluid flow with the third fluid flow to form a first fluid flow; directing the first fluid flow through a first passage of the flow control device; drawing the second fluid flow into the flow control device by virtue of a Venturi in the first passage; and expelling the first fluid flow from the flow control device through and outlet of the first passage disposed on the surface.

The method may further comprise providing an oscillatory flow from the flow source into the flow control device. The method may further comprise arranging at least a portion of

the second inlet on the surface so as to be downstream of the outlet with respect to the fluid flow over the surface. The method may further comprise arranging the second inlet disposed on the surface so as to be immediately adjacent to the outlet disposed on the surface.

For a better understanding of the present invention, and to show more clearly how it may be carried into effect, reference will now be made, by way of example, to the accompanying drawings, in which:-

Figure 1a shows a side view of a first class of flow control device and Figure 1b show a side view of a second class of flow control device;

Figure 2 is a side view of a flow control device according to a first embodiment of the invention;

Figure 3 is a perspective view of a flow control device according to the first embodiment of the invention; and

Figure 4 is a perspective view of a flow control device according to a second embodiment of the invention.

With reference to Figure 2, a flow control device 6 according to a first embodiment of the invention is suitable for controlling a freestream flow 8 over a surface 7 of a body. The flow control device 6 comprises a first passage 10, a second passage 20, a third passage 30 and a fourth passage 40.

The first passage 10 comprises a first inlet 12 within the body and an outlet 14 disposed on the surface 7. The second passage 20 comprises a second inlet 22 disposed on the surface 7 and the fourth passage 40 comprises a fourth inlet 42 also disposed on the surface 7. The third passage 30 is arranged to receive a fluid flow from a flow source

(not shown). The flow source is separate from the flow control device 6 and the flow source connects to the flow control device 6 via the third passage 30. The flow source may be any known source of flow, for example a pump or an electrically actuated jet, providing a control jet which may be a high speed fluid flow. The flow source may be provided within the body or outside the body.

The first passage 10 is provided by first and second internal partitions 16, 18, which are disposed within the flow control device 6. The second passage 20 is provided between a first wall 26 and the first internal partition 16. The first wall 26 is a continuation of the surface 7 of the body and the first wall 26 is angled with respect to the surface 7 with a smooth corner between the first wall 26 and surface 7. Similarly, the fourth passage 40 is provided between a second wall 46 and the second internal partition 18. The second wall 46 is a continuation of the surface 7 on a side of the body opposite to the first wall 26 and the second wall 46 is angled with respect to the surface 7 with a smooth corner between the second wall 46 and surface 7. A structure (not shown), for example a series of webs or ribs, is included to support the first and second internal partition walls 16, 18 with respect to the first and second walls 26, 46.

The second and fourth passages 20, 40 are disposed either side of the first passage 10 and the flow control device is substantially symmetrical about the first passage 10. The second inlet 22 is arranged on the surface 7 so as to be upstream of the outlet 14 with respect to the fluid flow 8. By contrast, the fourth inlet 40 is arranged on the surface 7 so as to be downstream of the outlet 14 with respect to the fluid flow 8.

The second inlet 22 is immediately adjacent to the outlet 14, because the second inlet 22 and outlet 14 are separated by the first internal partition 16, which is narrow with respect to the overall length of the surface. Similarly, the fourth inlet 42 is immediately adjacent to the outlet disposed on the surface, because the fourth inlet 42 and outlet 14 are separated by the second internal partition 18, which is narrow with respect to the overall length of the surface.

The first, second and third passages 10, 20, 30 are arranged such that the second, third and fourth passages 20, 30 feed into the first inlet 12 of the first passage 10. With this arrangement a portion 9 of the fluid flow 8 over the surface 7 is drawn into the second and fourth passage 20, mixes with the fluid flow from the flow source received via the third passage 30, and exits the outlet 14 via the first passage 10.

The first passage 10 comprises a narrowing (or nose) 17 so as to form a Venturi in the first passage. Owing to the Bernoulli effect, a low pressure exists at the narrowing 17. This low pressure assists in drawing fluid in from the second and fourth inlets 22, 42 and through the second and fourth passages 20, 40.

In an alternative embodiment (not shown) the second internal partition 18 and hence the fourth passage 40 may be omitted. In a further alternative embodiment (not shown) the first internal partition 16 and hence the second passage 20 may be omitted.

With reference to Figure 3, the flow control device 6 according to the first embodiment of the invention comprises first, second, third and fourth slots 19, 29, 39, 49. The first passage 10 and outlet 14 are formed by the first slot 19. The second passage 20 and second inlet 22 are formed by the second slot 29. The third passage 30 is formed by a third slot 39. The fourth passage 40 and fourth inlet 42 are formed by the fourth slot 49. The first, second, third and fourth slots 19, 29, 39, 49 are substantially longitudinal and are substantially parallel.

With reference to Figure 4, a flow control device 106 according to a second embodiment of the invention comprises an axisymmetric arrangement, which is in contrast to the substantially two-dimensional slots of the first embodiment shown in Figure 3. The second embodiment is otherwise identical to the first embodiment and Figure 2 could also represent a section of the second embodiment, except that the second and fourth passages shown in Figure 2 are part of the same second passage of the second embodiment.

Accordingly, a second inlet 122 and second passage 120 arranged with the second inlet 122 substantially surrounding an outlet 114 on the surface 107 and a first passage 110. The second inlet 122 therefore encircles the outlet 114 such that at least a portion of the second inlet 122 is arranged on the surface 107 so as to be downstream of the outlet 114 with respect to the fluid flow over the surface. A further portion of the second inlet 122 is arranged upstream of the outlet 114. The second inlet 122 and second passage 120 are formed by a substantially continuous slot 129 surrounding the outlet 114 and the first passage 110.

The first and second passages 110, 120 are divided by an internal partition wall 116. The second passage 120 is provided between the internal partition wall 116 and a wall 126. The wall 126 is a continuation of the surface 107 and the wall 126 is angled with respect to the surface 107 with a smooth corner between the wall 126 and surface 107. As with the first embodiment, a structure (not shown), for example a series of webs or ribs, is included in the second embodiment to support the internal partition wall 116 with respect to the wall 126.

In either embodiment, the flow area through the first passage 10, 110 of the flow control device will typically be approximately five times the area of the third passage 30, 130 fed by the flow source. The overall width of the flow control device depends on the particular application, but may typically be several millimetres.

In operation, the flow control device according to the present invention supplements the performance of blowing flow control devices. The flow control device increases the momentum of the flow from the flow source by mixing in flow from the freestream flow 8 sucked in through the second and/or fourth passages 20, 40. This suction may be achieved in part by the Bernoulli effect caused the narrowing 17 (the reduced cross-sectional area at narrowing 17 increases the flow velocity, which in turn reduces the pressure). In addition, the suction may also be achieved in part by the rapid viscous mixing of the entrained portion with the flow from the flow source within the first

passage 10 (the mixing process may increase local flow velocities, which in turn reduces the pressure). The reduced cross-sectional area of narrowing 17 and the mixing process in the first passage 10 may combine to further increase the suction effect and may combine in a synergistic manner. The increase in suction further increases the quantity of flow entrained through the second and/or fourth passages 20, 40, thereby further increasing the momentum imparted to the freestream flow 8 on exit from the outlet 14. Furthermore, the divergent portion of the first passage 10 causes diffusion of the mixed flow, giving enhanced entrainment. Thus, with the flow control device of the present invention, an increased amount of momentum is delivered to the adjacent boundary layer and this is achieved without increasing the mechanical power requirement.

The present invention also offers the additional benefit of providing suction to the target boundary layer, thus further enhancing its flow control effectiveness. The fluid entrained by the second and/or fourth inlets 22, 42 is sucked from the adjacent boundary layer, and does not come from an independent source. The entrained portion of the freestream flow 8 may include at least a part or all of the boundary layer on the surface 7. In this way, additional control of the adjacent boundary layer is possible through localised boundary layer sucking. Furthermore, as the second and/or fourth inlets 22, 42 are immediately adjacent to the outlet 14, a boundary layer is unable to grow between the second and/or fourth inlets and the outlet and this further serves to reduce the drag on the surface.

The flow control device according to the present invention may be driven by an unsteady flow from the flow source, for example an oscillating flow. An electrically actuated (eg a synthetic jet actuator) may provide such an oscillating flow and a pressurised fluid source may not necessarily be required. With such a flow source the flow direction in the third passage 30 may oscillate. However, the direction of the flow in the first passage 10 may not oscillate due to the net positive flow from the second and/or fourth passages 20, 40 mixing with the flow from third passage 30. In other

words, whilst the oscillating flow from the third passage 30 is superimposed onto the flow from the second and/or fourth passages, it is not sufficient to reverse the flow direction in the first passage 10 as there is large mass flow of fluid coming through the second and/or fourth passages 20, 40. Nevertheless, an unsteady flow is induced in the first passage and this may further reduce the pressure in the first passage and augment the above-mentioned suction effect. Thus, a flow control device with an oscillating flow source may be more compact than those driven by steady jets.

The 'cost' of employing flow control increases with the pressure and flow rate of the flow from the flow source. The present invention provides a greater flux of momentum (i.e. a greater ability to control the freestream) than is currently possible, without requiring any increase in pressure, flow or additional mechanical power input. In this respect, the present invention increases the 'efficiency' of the flow control system.

The flow control device according to the present invention may comprise an ejector or injector, such that the above-mentioned flow passages provide an ejector or injector. Furthermore, the flow control device according to the present invention may form part of a gas turbine, for example a jet engine or a stationary gas turbine for power generation. The flow control device may be used on ducting within a gas turbine, for example on the hub and/or casing walls, or may even be used on aerofoil surfaces within a gas turbine, for example blade surfaces. The flow control device may also be used in heat exchangers. More generally, the flow control device according to the present invention may be used for drag reduction eg on aerofoils or wings, mixing enhancement, heat transfer enhancement, and jet vectoring.

CLAIMS

1 A flow control device (6) for controlling a fluid flow over a surface (7), wherein the flow control device (6) comprises:

a first passage (10) comprising a first inlet (12) and an outlet (14), the outlet (14) being disposed on the surface (7), and wherein the first passage (10) comprises a Venturi;

a second passage (20) comprising a second inlet (22), the second inlet (22) being disposed on the surface (7); and

a third passage (30) for receiving a fluid flow from a flow source;

wherein the first, second and third passages (10,20,30) are arranged such that the second and third passages (20,30) feed into the first inlet (12) of the first passage (10) and that, in use, a portion of the fluid flow over the surface (7) is drawn into the second passage (20), mixes with the fluid flow from the flow source received via the third passage (30), and exits the outlet (14) disposed on the surface (7) via the first passage (10).

2 A flow control device as claimed in claim 1, wherein the second inlet (22) disposed on the surface (7) is immediately adjacent to the outlet (14) disposed on the surface (7).

3 A flow control device as claimed in claim 1 or 2, wherein at least a portion of the second inlet (22) is arranged on the surface (7) so as to be downstream of the outlet (14) with respect to the fluid flow over the surface (7).

4 A flow control device as claimed in claim 1 or 2, wherein the second inlet (22) is arranged on the surface (7) so as to be upstream of the outlet (14) with respect to the fluid flow over the surface (7).

5 A flow control device as claimed in any preceding claim, wherein the first passage (10) and outlet (14) are formed by a first slot (19) in the surface (7).

6 A flow control device as claimed in any preceding claim, wherein the second passage (20) and second inlet (22) are formed by a second slot (29) in the surface (7).

7 A flow control device as claimed in any preceding claim, wherein the third passage (30) is formed by a third slot (39).

8 A flow control device as claimed in any preceding claim, wherein the flow control device (6) further comprises a fourth passage (40) comprising a fourth inlet (42) disposed on the surface(7); wherein the fourth passage (40) is arranged such that the fourth passage (40) feeds into the first inlet (12) of the first passage (10).

9 A flow control device as claimed in claim 8, wherein the fourth inlet (42) disposed on the surface (7) is immediately adjacent to the outlet (14) disposed on the surface (7).

10 A flow control device as claimed in any one of claims 8 or 9, wherein the fourth inlet (42) is arranged on the surface (7) so as to be downstream of the outlet (14) with respect to the fluid flow over the surface (7).

11 A flow control device as claimed in any one of claims 8 to 10, wherein the fourth passage (40) and fourth inlet (42) are formed by a fourth slot (49) in the surface (7).

12 A flow control device as claimed in any one of claims 1 to 3, wherein the second inlet (22) is arranged such that the second inlet (22) substantially surrounds the outlet (14) on the surface (7).

13 A gas turbine engine comprising the flow control device (6) as claimed in any preceding claim.

14 A method of controlling a flow over a surface (7) using a flow control device (6), the method comprising:

providing a second fluid flow into the flow control device (6) from a second inlet (22) disposed on the surface (7);

providing a third fluid flow into the flow control device (6) from a flow source;

mixing the second fluid flow with the third fluid flow to form a first fluid flow,

directing the first fluid flow through a first passage (10) of the flow control device (6) ; and

expelling the first fluid flow from the flow control device (6) through an outlet (14) of the first passage (10 disposed on the surface (7).

15 A method as claimed in claim 14, wherein the method further comprises providing an oscillatory flow from the flow source into the flow control device (6).

16 A method as claimed in claim 14 or 15, wherein the method further comprises arranging at least a portion of the second inlet (22) on the surface (7) so as to be downstream of the outlet (14) with respect to the fluid flow over the surface (7).

17 A method as claimed in any one of claims 14 to 16, wherein the method further comprises arranging the second inlet (22) disposed on the surface (7) so as to be immediately adjacent to the outlet (14) disposed on the surface (7).

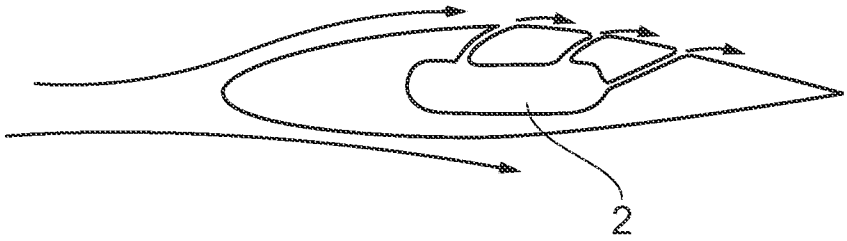

FIG. 1a

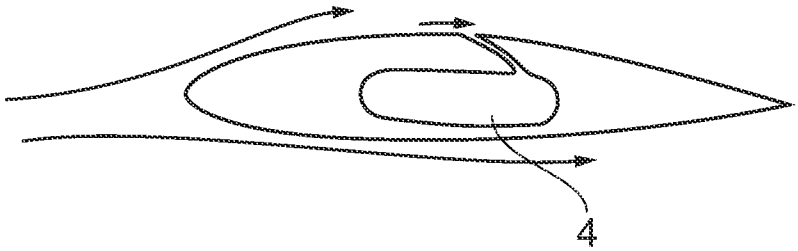

FIG. 1b

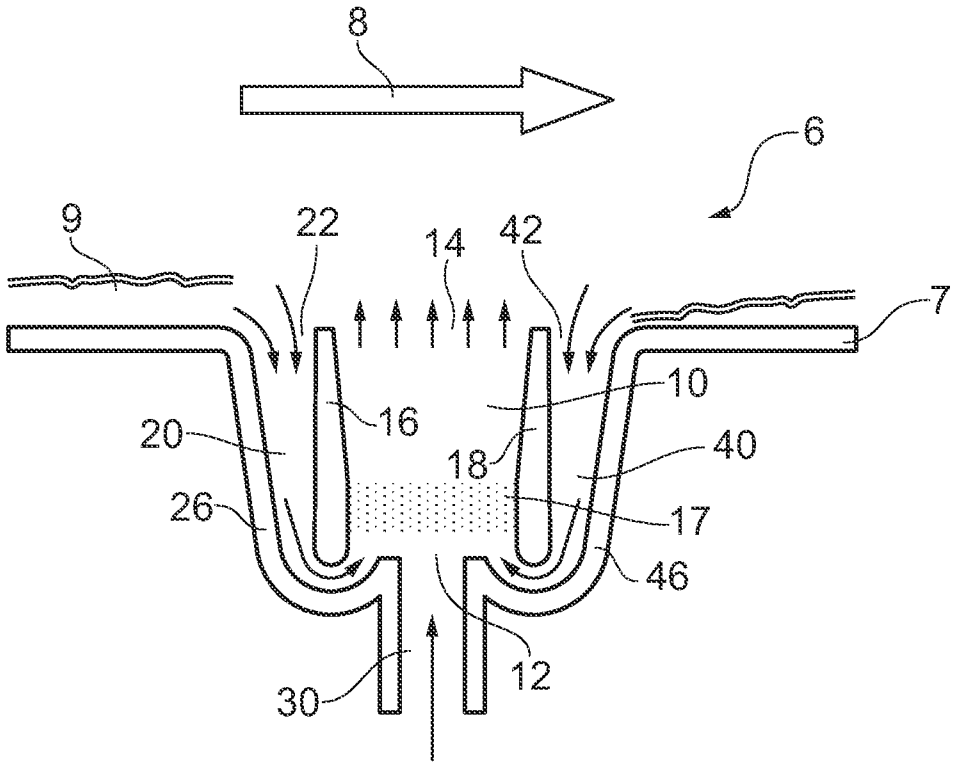

FIG. 2

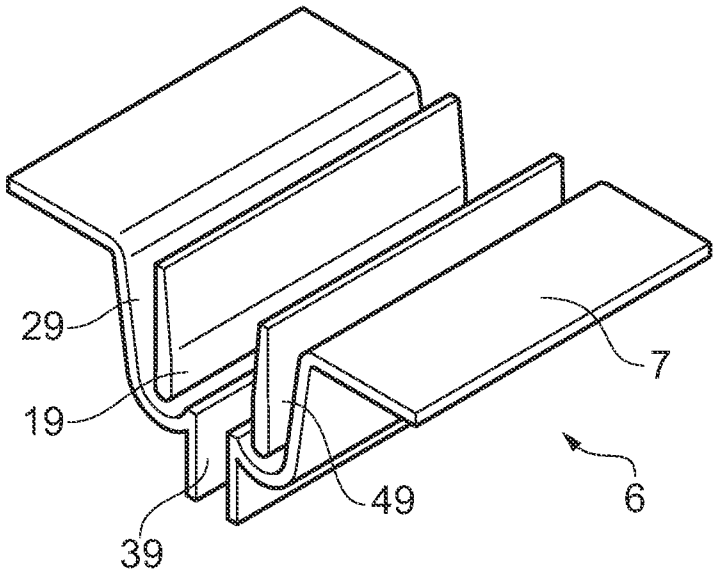

FIG. 3

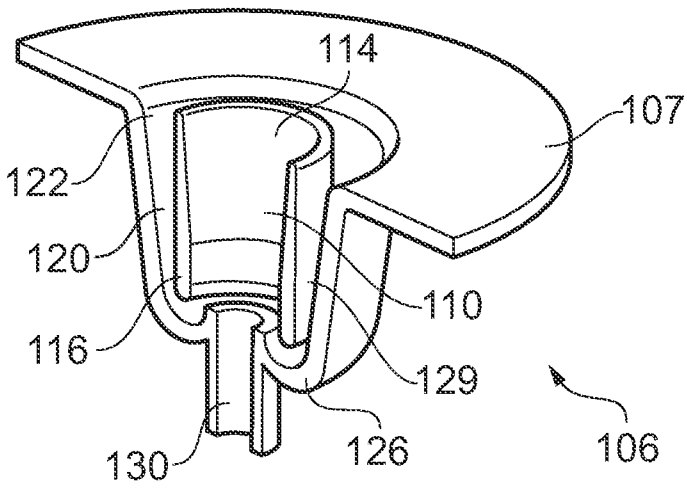

FIG. 4

INTERNATIONAL SEARCH REPORT

International application No
PCT/EP2010/052265

A. CLASSIFICATION OF SUBJECT MATTER
INV. B64C21/02 F01D5/14
ADD.

According to International Patent Classification (IPC) or to both national classification and IPC

B. FIELDS SEARCHED

Minimum documentation searched (classification system followed by classification symbols)
B64C F01D F04D F15D

Documentation searched other than minimum documentation to the extent that such documents are included in the fields searched

Electronic data base consulted during the international search (name of data base and, where practical, search terms used)
EPO-Internal

C. DOCUMENTS CONSIDERED TO BE RELEVANT

Category*	Citation of document, with indication, where appropriate, of the relevant passages	Relevant to claim No.
X Y A	WO 91/09776 A1 (VENTURI APPLIC INC [US]) 11 July 1991 (1991-07-11) page 1, lines 12-14 page 16, line 25 - page 27, line 32; figures 12-15	1,2,4-9, 11-14,17 15 3,10,16
Y A	US 2006/273197 A1 (SADDOUGHI SEYED [US] ET AL) 7 December 2006 (2006-12-07) abstract; figure 1A	15 1-14,16, 17
X Y A	US 2 841 344 A (MICHAEL STROUKOFF) 1 July 1958 (1958-07-01) column 5, line 23 - column 7, line 9; figures 1-4	1,2,4-9, 11-14,17 15 3,10,16

☐ Further documents are listed in the continuation of Box C.

☒ See patent family annex.

* Special categories of cited documents :

"A" document defining the general state of the art which is not considered to be of particular relevance

"E" earlier document but published on or after the international filing date

"L" document which may throw doubts on priority claim(s) or which is cited to establish the publication date of another citation or other special reason (as specified)

"O" document referring to an oral disclosure, use, exhibition or other means

"P" document published prior to the international filing date but later than the priority date claimed

"T" later document published after the international filing date or priority date and not in conflict with the application but cited to understand the principle or theory underlying the invention

"X" document of particular relevance; the claimed invention cannot be considered novel or cannot be considered to involve an inventive step when the document is taken alone

"Y" document of particular relevance; the claimed invention cannot be considered to involve an inventive step when the document is combined with one or more other such documents, such combination being obvious to a person skilled in the art.

"&" document member of the same patent family

Date of the actual completion of the international search	Date of mailing of the international search report
29 April 2010	07/05/2010

Name and mailing address of the ISA/	Authorized officer
European Patent Office, P.B. 5818 Patentlaan 2 NL - 2280 HV Rijswijk Tel. (+31-70) 340-2040, Fax: (+31-70) 340-3016	Vañó Gea, Joaquín

INTERNATIONAL SEARCH REPORT

Information on patent family members

International application No
PCT/EP2010/052265

Patent document cited in search report	Publication date	Patent family member(s)	Publication date
WO 9109776 A1	11-07-1991	NONE	
US 2006273197 A1	07-12-2006	NONE	
US 2841344 A	01-07-1958	NONE	