Feb. 13, 1945. W. G. WINKLER 2,369,511

REFRIGERATING APPARATUS

Filed Nov. 17, 1943 2 Sheets-Sheet 1

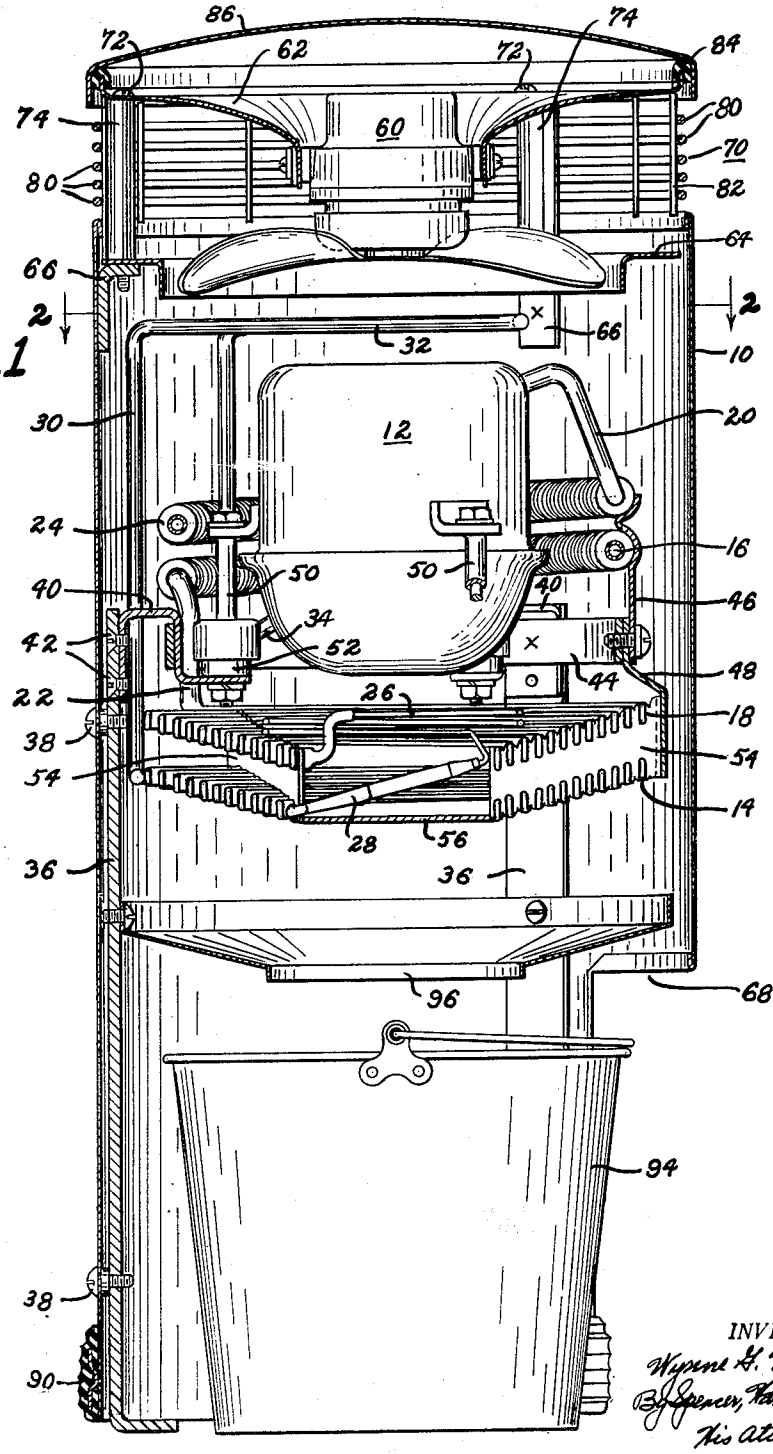

Fig. 1

INVENTOR.
Wynne G. Winkler
By Spencer, Hardman & Fehr.
His Attorneys.

Feb. 13, 1945. W. G. WINKLER 2,369,511

REFRIGERATING APPARATUS

Filed Nov. 17, 1943 2 Sheets-Sheet 2

Fig. 2

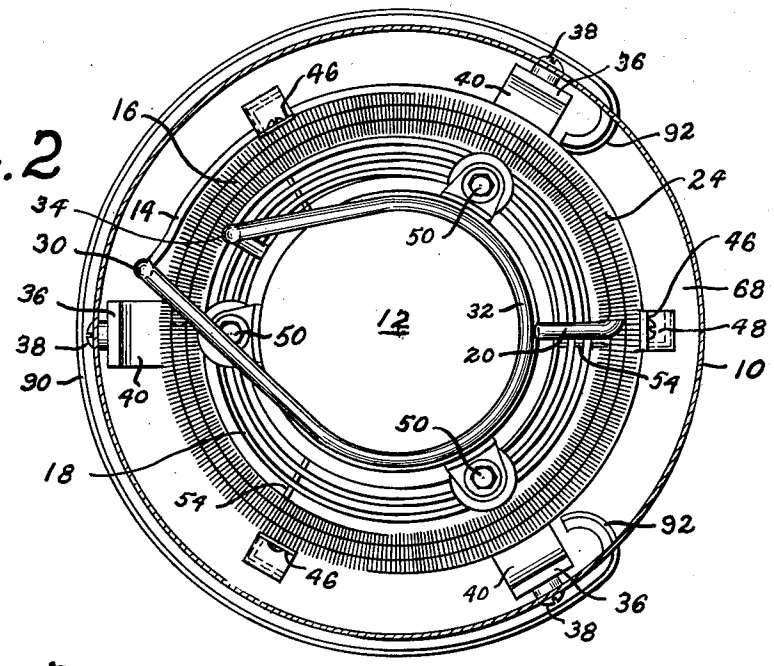

Fig. 3

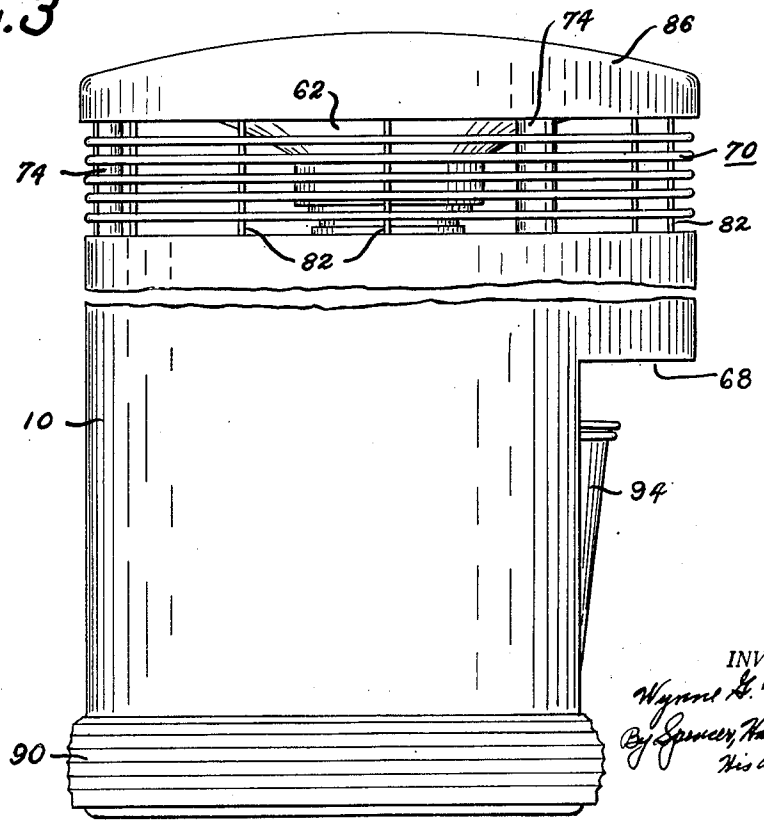

INVENTOR.
Wynne G. Winkler
By Spencer, Hardman & Fehr
His attorneys.

Patented Feb. 13, 1945

2,369,511

UNITED STATES PATENT OFFICE

2,369,511

REFRIGERATING APPARATUS

Wynne G. Winkler, Dayton, Ohio, assignor to General Motors Corporation, Dayton, Ohio, a corporation of Delaware

Application November 17, 1943, Serial No. 510,598

11 Claims. (Cl. 62—129)

This invention relates to refrigerating apparatus and more particularly to an improved dehumidifier.

One object of this invention is to provide a dehumidifier which is cheap to operate and which does not require frequent servicing or recharging.

Another object of this invention is to provide a dehumidifier which may be sold at a price low enough to go into widespread use for conditioning basement game rooms, storage rooms and the like.

A further object of this invention is to provide a dehumidifier which uses the same type of highly efficient sealed rotary compressor mechanism as used in household refrigerators.

A further object of this invention is to provide an inexpensive and light weight cabinet for the refrigerating apparatus and to thermally insulate the cabinet from the colder portions of the refrigerating apparatus.

A still further object of this invention is to so construct and arrange the coils in a mechanical dehumidifier whereby tilting the coils does not materially interfere with the free flow of refrigerant through the coils.

Further objects and advantages of the present invention will be apparent from the following description, reference being had to the accompanying drawings, wherein a preferred form of the present invention is clearly shown.

In the drawings:

Fig. 1 is a vertical sectional view;

Fig. 2 is a horizontal sectional view taken substantially on line 2—2 of Fig. 1; and

Fig. 3 is an elevational view.

Referring now to Fig. 1 of the drawings, reference numeral 10 designates a light weight cylindrical shell which serves to enclose the refrigerating apparatus. The refrigerating apparatus comprises a sealed motor-compressor mechanism 12, an evaporator 14, a first condenser section 16 and a second condenser section 18. The compressed refrigerant leaves the motor compressor unit 12 through the outlet pipe 20, which leads to the first condenser section 16. The refrigerant line 22 connects the first condenser section 16 with the second condenser section 18, whereby the two condenser sections 16 and 18 are arranged in series refrigerant flow relationship. The condenser section 16 is provided with fins 24, whereas the condenser section 18 does not have any fins and is formed by spirally winding flat tubing as shown in Fig. 1. A small liquid refrigerant line 26 conveys the refrigerant liquified in the condenser to the fixed restrictor 28. The fixed restrictor 28 serves to reduce the pressure of the liquid refrigerant supplied to the evaporator 14 in accordance with standard practice. The refrigerant vapor leaves the evaporator 14 through the vapor line 30, which includes a looped portion 32, which serves as a flexible connection between the evaporator 14 and the motor-compressor unit 12. The vaporized refrigerant enters the motor-compressor unit 12 through the line 34.

While I have shown a fixed restrictor for controlling the flow of refrigerant from the condenser to the evaporator, it is obvious that any form of pressure regulating means may be used in lieu of the fixed restrictor. One advantage of a fixed restrictor in a unit of this type is that it is inexpensive and does not require any moving parts.

The compressor is intended to be operated continuously in damp weather, although it is within the purview of this invention to provide any type of control for turning on and off the compressor. A humidostat, for example, could be used for controlling the motor-compressor mechanism. I have found, however, that when using a small capacity efficient motor-compressor unit the cost of operation is so small that there is little, if anything, to be gained by turning on and off the motor-compressor unit. The advantages resulting from the omission of any complicated control mechanism outweighs the advantages resulting from the use of such a control. It is likewise within the purview of this invention to utilize conventional motor protective devices such as a motor overload relay, high or low pressure cut-outs and the like.

Since the apparatus is intended to be placed in damp basements and the like, some means must be provided for preventing the temperature of the exterior walls of the evaporator compartment from dropping below the dew point temperature of the air. In the arrangement shown herein, a very light weight outer casing 10 is provided for enclosing the apparatus and three or more reinforcing stays 36 are provided, which support the main weight of the refrigerating apparatus. These stays are secured in spaced relationship to the inner wall of the casing 10 by the fastening means 38. Motor-compressor mounting brackets 40 are fastened to the upper end of the stays 36 by means of screws 42, as best shown in Fig. 1. A coil supporting ring 44 connects the brackets 40 and serves as a mounting means for the brackets 46 and 48 which serve to hold the evaporator and condenser sections in place. The motor-compressor mounting elements 50 include resilient rubber or rubber-like supports 52, which may be of any well known construction.

The evaporator 14 and the condenser section 18 comprise spirally wound flat tubing which is held in place by a plurality of sheet metal spacers 54. The spacers 54 have their lower and upper edges notched so as to receive the tubing therein. The metal which remains between the notches is peened over into engagement with the tubing so as to hold the tubing within the notches. This constitutes a very inexpensive light weight construction.

It will be noted that the condenser section 18 is arranged in thermal exchange with the bracket 48 at a point intermediate the mounting ring 44 and the evaporator 14 so as to add heat to the bracket 48 at that point, thereby largely eliminating the tendency of the upper end of the bracket 48 from getting cold enough to cause condensation of moisture. It will be further noted that the bracket 48 is secured to the ring 44, which in turn is secured to the compressor mounting brackets 40. This arrangement largely eliminates the transfer of heat between the outer casing and the cold evaporator. An end plate 56 secured to the brackets 54 closes the central opening through the spirally wound coils so as to prevent any of the air from bypassing the coils.

A fan 60 is supported in the upper end of the casing by means of an air directing baffle 62. A fan shroud 64 is held in place by means of three or more brackets 66, which are welded or otherwise secured to the inner wall of the casing 10. The air to be dehumidified enters the casing 10 through the side inlet 68 and leaves the cabinet through the grille 70 in the upper part of the casing. Bolts 72 hold the air directing baffle 62 in place. The bolts 72 are threadedly connected to the bracket 66. The spacer elements 74 serve to space the baffle 62 from the fan shroud 64 and serve to hold the fan shroud 64 down on to the upper surface of the brackets 66. The air grille 70 comprises a plurality of round bars 80 which are welded or otherwise secured to the spacer elements 74 and a plurality of vertical bars 82. A rubber-like gasket 84, which is substantially U-shaped in cross section, is arranged as shown in Fig. 1 and serves to frictionally engage the cover 86.

The bottom edge of the casing 10 is protected from damage by means of a rubber trim strip 90 which has inturned ends 92 adjacent the edges of the opening 68. A condensate collecting pail 94 may be used as shown for collecting the water dripping from the evaporator. A funnel-like element 96 is supported as shown by the stays 36 and serves to direct the water into the pail.

While I have shown a pail for collecting the condensate it is obvious that the unit may be set over the basement drain so as to eliminate the need for the pail, or a drain pipe may be provided for conveying the condensate from the unit to a convenient drain.

If desired, a block (not shown) may be used for blocking up the pail so that the upper edge of the pail is higher than the lower edge of the funnel 96, whereby when the pail is completely filled the water in the pail will block the flow of air through the central opening in the funnel 96. With the flow of air thus blocked, no more moisture will be removed from the air thereby avoiding overflow of the pail. By virtue of this arrangement the lower end of the funnel 96 in effect serves as a means for preventing removal of moisture from the air upon a predetermined accumulation of water in the water collecting pail 94.

While the form of embodiment of the invention as herein disclosed constitutes a preferred form, it is to be understood that other forms might be adopted, as may come within the scope of the claims which follow.

What is claimed is as follows:

1. In a mechanical dehumidifier, a vertically disposed cylindrical casing, an air outlet adjacent the upper end of said casing, an air inlet adjacent the lower end of said casing, a fan for flowing air in through said inlet and out through said outlet, a sealed rotary motor-compressor unit within said casing, a plurality of juxtaposed spirally wound heat exchange coils disposed at right angles to the axis of said casing, the coils comprising flattened tubing having the flat sides parallel to the direction of air flow, one of said coils serving as an evaporator and another serving as a condenser, refrigerant flow connections between said condenser, compressor and evaporator, and means for collecting the moisture which condenses on said evaporator.

2. In a mechanical dehumidifier, a vertically disposed cylindrical casing, an air outlet adjacent the upper end of said casing, an air inlet adjacent the lower end of said casing, a fan for flowing air in through said inlet and out through said outlet, a sealed rotary motor-compressor unit within said casing, a plurality of juxtaposed spirally wound heat exchange coils disposed at right angles to the axis of said casing, the coils comprising flattened tubing having the flat sides parallel to the direction of air flow, one of said coils serving as an evaporator and another serving as a condenser, refrigerant flow connections between said condenser, compressor and evaporator, means for collecting the moisture which condenses on said evaporator, and a plurality of radially extending brackets disposed between said heat exchange coils for holding the tubing in proper spaced relationship and for supporting the tubing within said casing.

3. In a mechanical dehumidifier, a vertically disposed cylindrical casing, an air outlet adjacent the upper end of said casing, an air inlet adjacent the lower end of said casing, a fan for flowing air in through said inlet and out through said outlet, a sealed rotary motor-compressor unit within said casing, a plurality of juxtaposed spirally wound heat exchange coils disposed at right angles to the axis of said casing, the coils comprising flattened tubing having the flat sides parallel to the direction of air flow, one of said coils serving as an evaporator and another serving as a condenser, refrigerant flow connections between said condenser, compressor and evaporator, means for collecting the moisture which condenses on said evaporator, and a plurality of radially extending brackets disposed between said heat exchange coils for holding the tubing in proper spaced relationship and for supporting the tubing within said casing, said brackets having notched edges into which the individual convolutions of the coils project.

4. In a mechanical dehumidifier, a vertically disposed cylindrical casing, an air outlet adjacent the upper end of said casing, an air inlet adjacent the lower end of said casing, a fan for flowing air in through said inlet and out through said outlet, a sealed rotary motor-compressor unit within said casing, a plurality of juxtaposed spirally wound heat exchange coils disposed at right angles to the axis of said casing, the coils comprising flattened tubing having the flat sides parallel to the direction of air flow, one of said

coils serving as an evaporator and another serving as a condenser, refrigerant flow connections between said condenser, compressor and evaporator, and means for collecting the moisture which condenses on said evaporator, the adjacent convolutions of said spirals being arranged on different planes with the outer convolution of each pair of convolutions higher than the adjacent inner convolution.

5. In a refrigerating system, the combination, a compressor, a condenser, an evaporator, a common support for said compressor, condenser and evaporator, refrigerant flow connections between said compressor, condenser and evaporator including a refrigerant flow control device, said evaporator comprising a horizontally disposed spiral coil in the shape of the outer surface of a truncated cone, said condenser comprising a first section similar to said evaporator and a second section for augmenting said first section whereby the condenser has a greater total heat transfer surface than said evaporator.

6. Dehumidifying apparatus for use in basement rooms and the like comprising in combination, a vertically disposed cylindrical sheet metal casing of relatively light gauge material, a motor-compressor mechanism disposed within said casing, refrigerant condensing means and evaporating means connected to said compressor and disposed within said casing, a plurality of relatively heavy gauge vertically disposed reinforcing stays secured to said casing and having inturned end members for supporting said motor-compressor mechanism, and a vertically disposed circular drip tray beneath said evaporator having its outer periphery in engagement with said stays so as to hold said stays properly spaced with respect to the central axis of said casing.

7. Dehumidifying apparatus for use in basement rooms and the like comprising in combination, a vertically disposed cylindrical sheet metal casing of relatively light gauge material, a motor-compressor mechanism disposed within said casing, refrigerant condensing means and evaporating means connected to said compressor and disposed within said casing, a plurality of relatively heavy gauge vertically disposed reinforcing stays secured to said casing and having inturned end members for supporting said motor-compressor mechanism, and a vertically disposed circular drip tray beneath said evaporator having its outer periphery in engagement with said stays so as to hold said stays properly spaced with respect to the central axis of said casing, and means for collecting the condensate dripping onto said tray including a removable bucket.

8. Dehumidifying apparatus for use in basement rooms and the like comprising in combination, a vertically disposed cylindrical sheet metal casing of relatively light gauge material, a motor-compressor mechanism disposed within said casing, refrigerant condensing means and evaporating means connected to said compressor and disposed within said casing, a plurality of relatively heavy gauge vertically disposed reinforcing stays secured to said casing and having inturned end members for supporting said motor-compressor mechanism, and a vertically disposed circular drip tray beneath said evaporator having its outer periphery in engagement with said stays so as to hold said stays properly spaced with respect to the central axis of said casing, said casing and said drip tray having vertically aligned openings whereby said apparatus may be placed over a basement drain or the like so as to discharge the condensate water directly into said drain.

9. Dehumidifying apparatus for use in basement rooms and the like comprising in combination, a vertically disposed cylindrical sheet metal casing, a motor-compressor mechanism disposed within said casing, refrigerant condensing means and evaporating means connected to said compressor and disposed within said casing, a plurality of reinforcing stays secured to said casing for supporting said motor-compressor mechanism, and a drip tray beneath said evaporator and motor-compressor mechanism having its outer periphery in engagement with said stays so as to hold said stays properly spaced with respect to the central axis of said casing.

10. Dehumidifying apparatus for use in basement rooms and the like comprising in combination, a vertically disposed casing, a motor-compressor mechanism disposed within said casing, refrigerant condensing means and evaporating means connected to said compressor and disposed within said casing, a plurality of vertically disposed reinforcing stays secured to said casing for supporting said motor-compressor mechanism, and a vertically disposed circular drip tray beneath said evaporator, said casing and said drip tray having vertically aligned openings whereby said apparatus may be placed over a basement drain or the like so as to discharge the condensate water directly into said drain.

11. In a portable, self-contained dehumidifier, a vertically disposed cylindrical sheet metal casing, a circumferentially extending air outlet opening in the side wall thereof adjacent the upper end of said casing, an air inlet opening in the side wall of said casing adjacent the bottom thereof, a refrigerant evaporator disposed between said openings, a refrigerant condenser disposed above said evaporator in the path of the air leaving said evaporator, a refrigerant compressor in refrigerant flow relationship with said evaporator and said condenser and arranged in said casing above said evaporator, means for circulating air in through said inlet and out through said outlet, said means for circulating air comprising a fan having a vertically disposed axis arranged in the upper end of said casing, and a baffle arranged above said fan for directing the air outwardly through said air outlet opening.

WYNNE G. WINKLER.