Dec. 6, 1938. B. C. BECKER 2,139,146

SUCTION CLEANER

Filed March 9, 1936 2 Sheets-Sheet 1

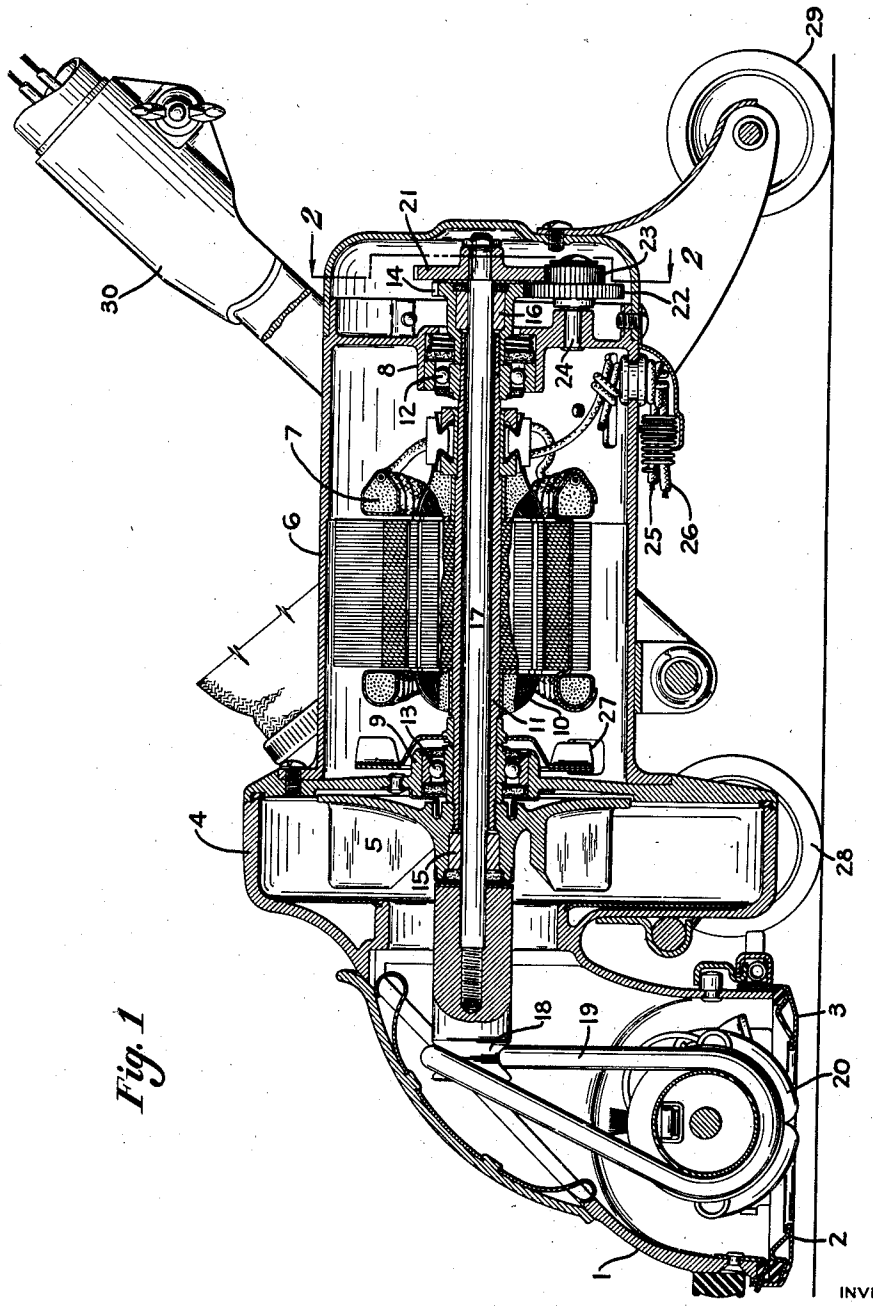

Fig. 1

INVENTOR

Bernard C. Becker

BY

Harry S. Bruarse

ATTORNEY

Dec. 6, 1938. B. C. BECKER 2,139,146

SUCTION CLEANER

Filed March 9, 1936 2 Sheets-Sheet 2

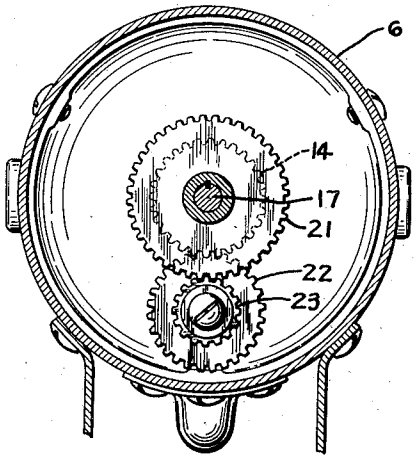

Fig. 2

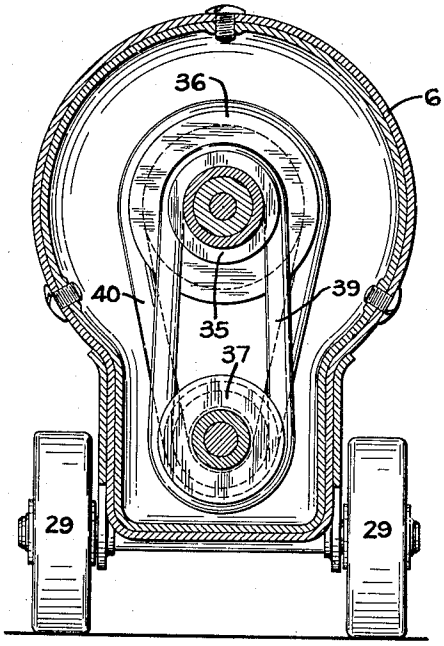

Fig. 4

Fig. 3

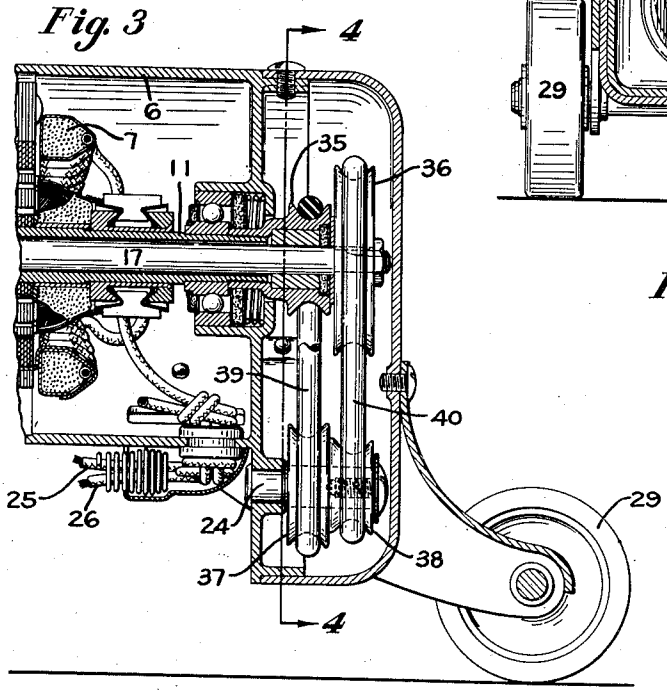

INVENTOR

Bernard C. Becker

BY

Harry S. Dunarse

ATTORNEY

Patented Dec. 6, 1938 2,139,146

UNITED STATES PATENT OFFICE

2,139,146

SUCTION CLEANER

Bernard C. Becker, Canton, Ohio, assignor to The Hoover Company, North Canton, Ohio, a corporation of Ohio

Application March 9, 1936, Serial No. 67,892

2 Claims. (Cl. 15—8)

The present invention relates to suction cleaners in general and particularly to new and novel improvements in agitator-driving means. More specifically the invention comprises a suction cleaner in which the agitator speed is reduced materially below the speed of rotation of the motor shaft, without the use of an excessively small pulley upon the pulley shaft, and by means of a second shaft concentric with the usual motor shaft which rotates at a slower speed.

It is an object of the present invention to provide a new and improved suction cleaner. It is another object of the invention to provide new and improved agitator-driving means for a suction cleaner. A still further object is the provision of new and novel means to obtain reduced agitator speed in a suction cleaner. A still further object is the provision, in a suction cleaner, of speed-reducing means comprising an internal shaft concentric with the motor shaft, and driven thereby, and rotating at a lower speed than the motor shaft. These and other more specific objects will be apparent upon reading the following specification and claims and upon considering in connection therewith the attached drawings to which they relate.

Referring now to the drawings, in which preferred embodiments of the present invention are disclosed:

Figure 1 is a longitudinal cross section through a suction cleaner construction in accordance with the present invention;

Figure 2 is a transverse vertical section through the machine upon the line 2—2 of Figure 1;

Figure 3 is a partial vertical section through a second preferred embodiment of the present invention;

Figure 4 is a vertical transverse cross section upon the line 4—4 of Figure 3.

The modern suction cleaner removes the foreign matter from a surface covering undergoing cleaning by the combined cleaning effects of an air stream moving at high velocity and surface-agitating means. The latter are ordinarily driven from the shaft of the motor which primarily functions to drive the suction-creating fan. A preferred form of agitating means comprises a rotatable agitator positioned within the cleaner nozzle, and provided with surface-contacting agitating means upon its surface. These agitating means may be flexible brushes and rigid beating elements. It is desirable that the agitator speed be considerably less than the speed of rotation of the ordinary motor armature and shaft. To effect this reduction in speed there is usually provided a small-diameter pulley upon the motor shaft which is connected to a large-diameter pulley upon the agitator by means of a power-transmitting belt. The continual flexing of this belt over the small diameter pulley results in its deterioration much more rapidly than is desirable. Were the motor speed of rotation reduced then a larger diameter pulley could be used upon the motor shaft with the same resultant speed of rotation of the agitator. High suction is necessary in the cleaner, however, and the motor speed must be maintained. In the suction cleaner construction in accordance with the present invention speed-reducing means are incorporated which make possible the use of a relatively large-diameter pulley upon the driving shaft thereby resulting in increased belt life. That construction comprises briefly a hollow motor shaft which rotates with the motor armature and within which is positioned a second drive shaft which rotates relative to the hollow shaft and at a speed less than that of the hollow shaft. This construction is now explained in detail.

The modern suction cleaner in which the present invention is embodied comprises a nozzle 1 provided with front and rear surface-contacting lips 2 and 3. The nozzle is interiorly connected to a fan chamber 4 within which is positioned a suction-creating fan 5. Upon the opposite side of the fan chamber 4 is located the motor casing 6 which carries the fixed field or stator 7 of the electric motor together with the armature bearing seats 8 and 9. The armature 10 is carried by the hollow shaft 11 which is rotatably mounted in bearing 12 and sealed bearing 13 positioned in the bearing seats 8 and 9, respectively. The hollow shaft 11 extends beyond the bearings at each end and at its forward end extends into the fan chamber 4 where it carries the suction-creating fan 5.

Rearward of the rear supporting bearing 12 the hollow motor shaft 11 carries a centrally bored gear 14 which rotates with the shaft and at the same speed. Rotatably positioned within the hollow shaft 11 and mounted in sealed sleeve bearings 15 and 16, located within the hub of suction-creating fan 5 and hollow gear 14, respectively, is a second shaft 17 which may be known as the power-transmitting motor shaft.

At its forward end shaft 17 is formed as a pulley 18 which is connected by a suitable power-transmitting belt 19 to a rotatable agitator 20 which is rotatable within the nozzle 1 and which comprises rigid beater elements and brush elements of a common and well known type.

At its rear end beyond the gear 14 the power-transmitting motor shaft 17 carries fixedly a gear 21 which is larger in diameter than the gear 14 carried by the hollow motor shaft 11. Immediately below gears 14 and 21, which are immediately adjacent but are spaced for independent rotation, are two gears 22 and 23 rotatably mounted upon a spindle 24. Gears 22 and 23 are integral and cannot rotate separately. The larger gear 22 meshes with the motor-driven gear 14 and upon the rotation of that gear transmits force through its companion gear 23 to the gear 21 fixedly carried by the power-transmitting motor shaft 17. The ratios of the gears is such that the gear 21 will rotate at a lesser speed than the speed of rotation of the driving gear 14 resulting, obviously, in the internal shaft 17 rotating at a lesser speed than the surrounding hollow motor shaft 11. This relative rotational speed is dependent upon the gear ratios and can be controlled by the proper selection of gears.

Electric current is conveyed to the electrical motor by incoming power leads 25, 26 which extend into the casing on its under side. As in the usual motor a cooling fan 27 is provided. The entire cleaner is movably supported upon front wheels, one of which is indicated at 28, and rear wheels, one of which is indicated at 29. A pivoted handle 30 is provided by which the operator may exert a propelling force.

The operation of the cleaner construction in accordance with the present invention is believed to be obvious. The rotation of the motor effects the rotation of the suction-creating fan 5 and the creation of a reduced pressure within the nozzle 1. A surface covering undergoing cleaning is lifted into contact with the nozzle lips 2 and 3 and with the agitator 20 positioned therebetween. The rotation of the motor also effects the rotation of the gear 14 which is connected through the gear train described, to the gear 21 on the power-transmitting shaft 17 and that shaft rotates at a reduced speed to effect the rotation of the agitator 20 through the intermediaries comprising the pulley 18 and the power-transmitting belt 19. The agitator rotates at a lesser speed than would be the case were it connected directly to the motor shaft 11 for the shaft 17 itself rotates at a lesser speed. The pulley 18 upon the driving shaft 17 may be of larger diameter than it would be were it connected to the hollow motor shaft 11 yet the speed of rotation of the agitator can be reduced because of the gear ratios which have effected speed reduction in the shaft 17.

Referring now to Figures 3 and 4 in particular, a second preferred embodiment of the invention is disclosed in which the cleaner is constructed as before described with the exception that the gears 14, 21, 22 and 23 have been eliminated and in their place have been substituted pulleys 35, 36, 37 and 38, respectively. Pulley 35 upon hollow motor shaft 11 is connected to the large diameter pulley 37 upon the spindle 24 by means of a belt 39 while a belt 40 connects the pulley 38 integral with pulley 37, to the pulley 36 carried by the power-transmitting shaft 17. The operation of this form of the invention is exactly that described in connection with the first embodiment.

I claim:

1. In a suction cleaner having a nozzle, a rotary agitator therein, a fan chamber connected to said nozzle, a fan in said fan chamber, a pulley axially alined with said fan, and a belt connecting said pulley to said agitator, means to rotate said pulley at a speed less than that of said fan, said means comprising a motor having a hollow shaft on which said fan is mounted, a gear at the opposite end of said shaft, a second shaft extended longitudinally of said hollow shaft and on which said pulley is mounted, bearings carried by said gear and by said fan rotatably supporting said second shaft, and power-transmitting speed-reducing means connecting said independently rotatable shaft to said hollow shaft.

2. In a suction cleaner, a fan chamber, a motor casing having a wall in common with said fan chamber, a nozzle open to said fan chamber at the eye thereof, said nozzle and fan chamber forming an air passageway, a rotor in said motor casing including a hollow shaft supported by a sealed bearing in said common wall and extended into said fan chamber, a fan carried by said hollow shaft in said fan chamber, a second independently rotatable shaft positioned within said hollow shaft and extended beyond said fan, power transmission and speed reducing means connecting said shafts to drive said second shaft at a lower speed, means sealing the opening between said shafts to prevent air flow therebetween, a pulley on the nozzle end of said second shaft, an agitator in said nozzle, and power transmission means connecting said agitator to said second shaft.

BERNARD C. BECKER.