Oct. 27, 1970 P. E. HUCHEL 3,536,913

PANORAMIC X-RAY MACHINE FOR TAKING RADIOGRAPHS OF THE ORAL CAVITY

Filed Nov. 17, 1967 3 Sheets-Sheet 1

Fig. I

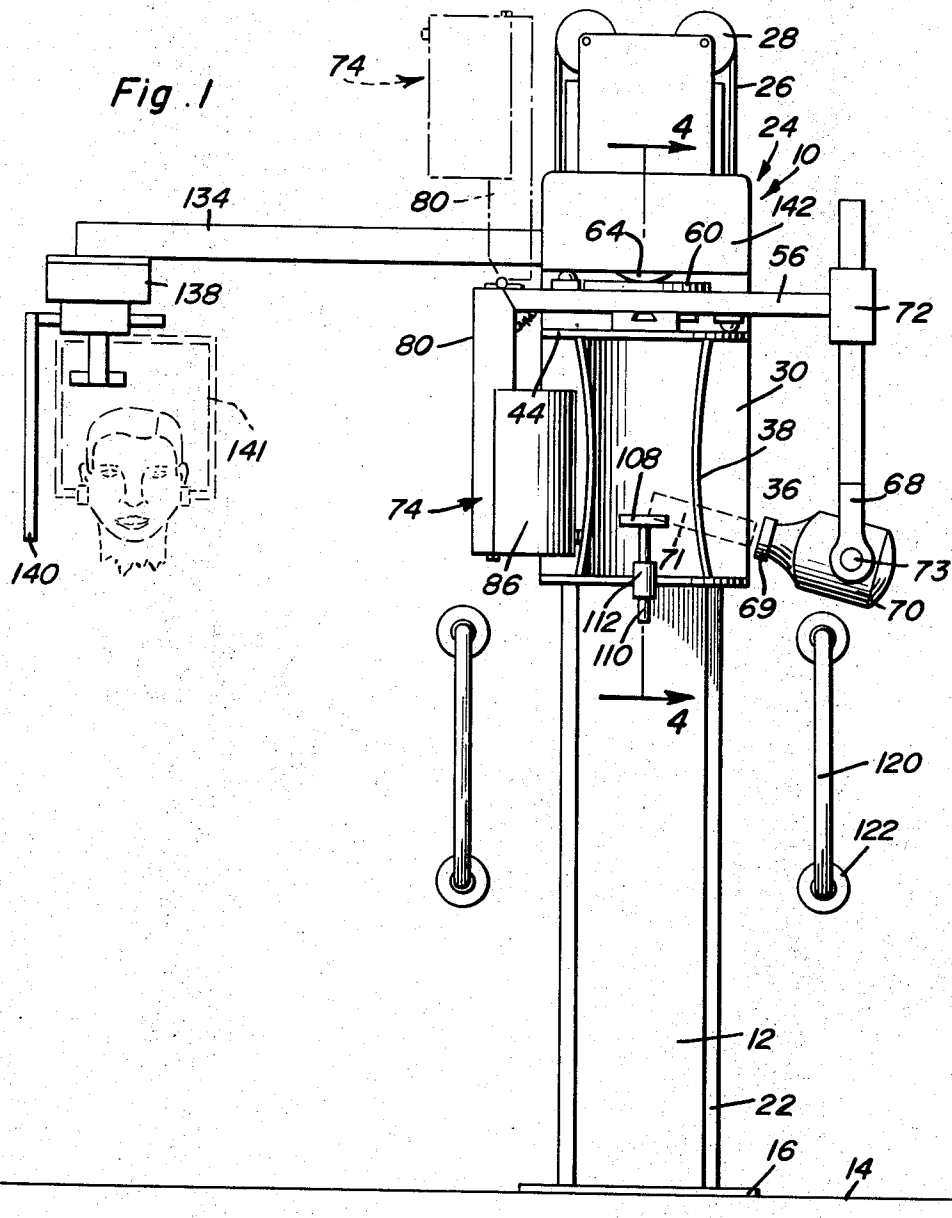

Fig. II

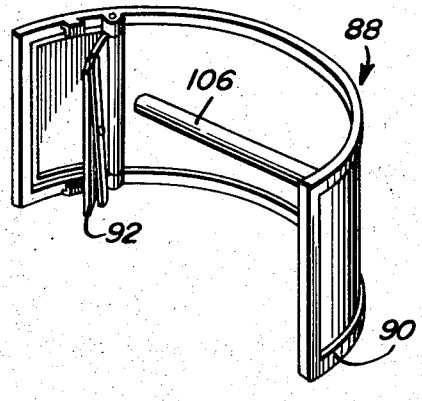

Paul E. Huchel

INVENTOR.

BY Clarence A. O'Brien and Harvey B. Jacobson

Attorneys

Oct. 27, 1970 P. E. HUCHEL 3,536,913

PANORAMIC X-RAY MACHINE FOR TAKING RADIOGRAPHS OF THE ORAL CAVITY

Filed Nov. 17, 1967 3 Sheets-Sheet 2

Fig. 2

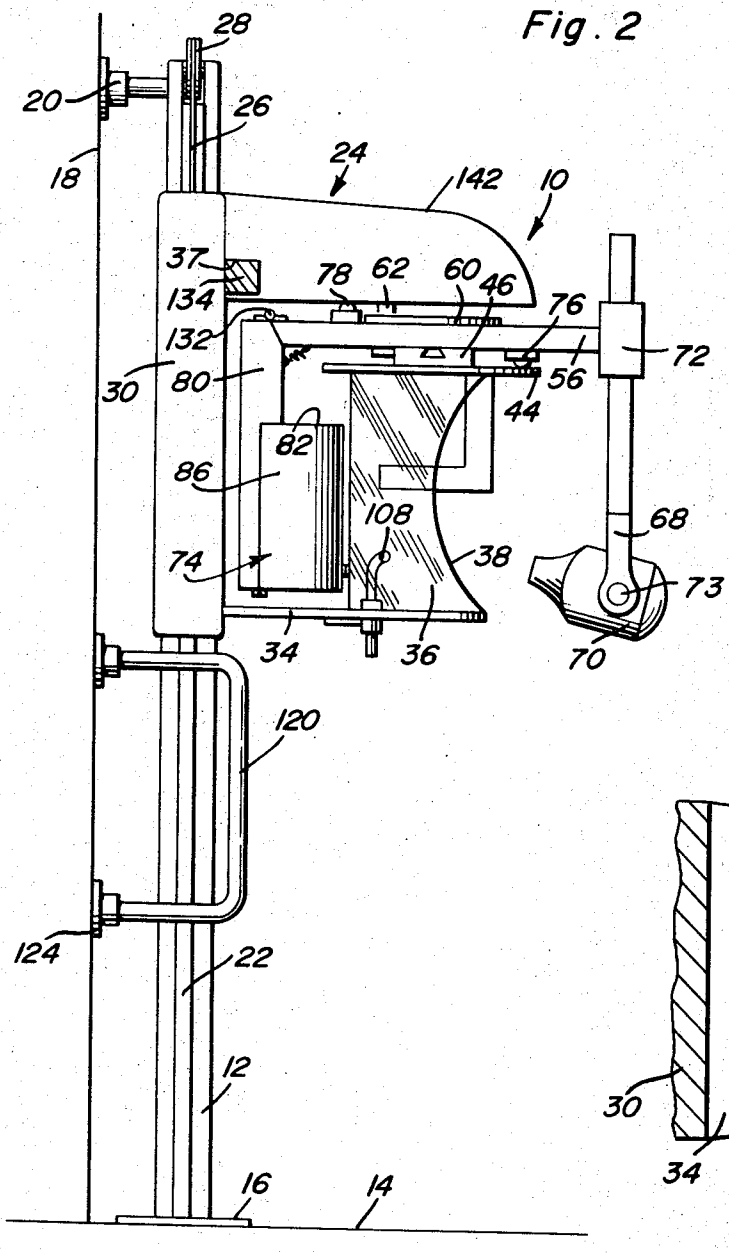

Fig. 7

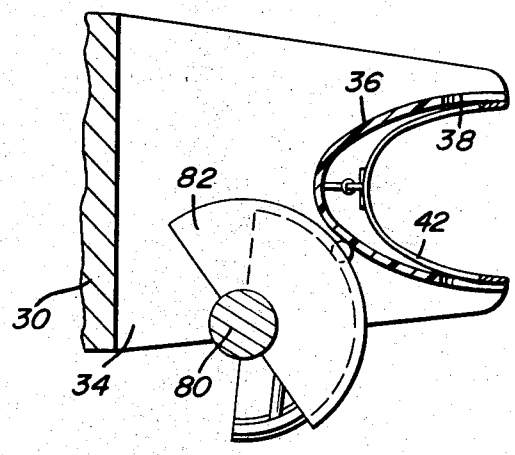

Fig. 6

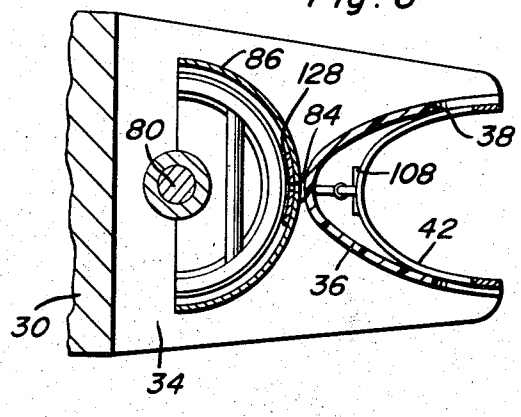

Paul E. Huchel

INVENTOR.

BY Clarence A. O'Brien and Harvey B. Jacobson
Attorneys

Oct. 27, 1970 P. E. HUCHEL 3,536,913

PANORAMIC X-RAY MACHINE FOR TAKING RADIOGRAPHS OF THE ORAL CAVITY

Filed Nov. 17, 1967 3 Sheets-Sheet 3

Fig. 3

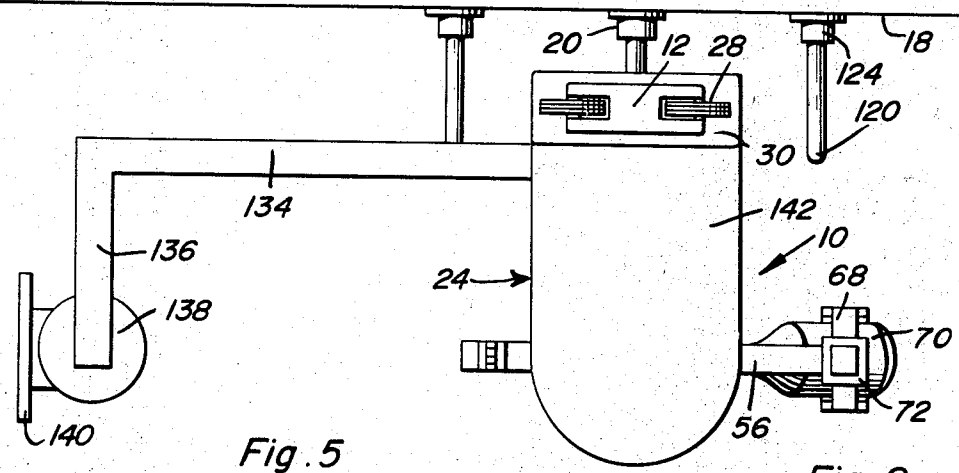

Fig. 5

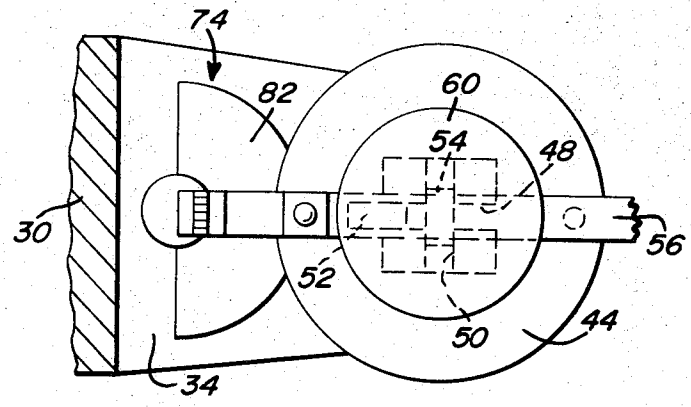

Fig. 9

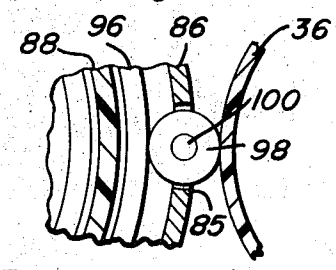

Fig. 8

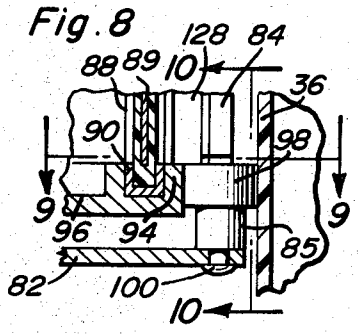

Fig. 4

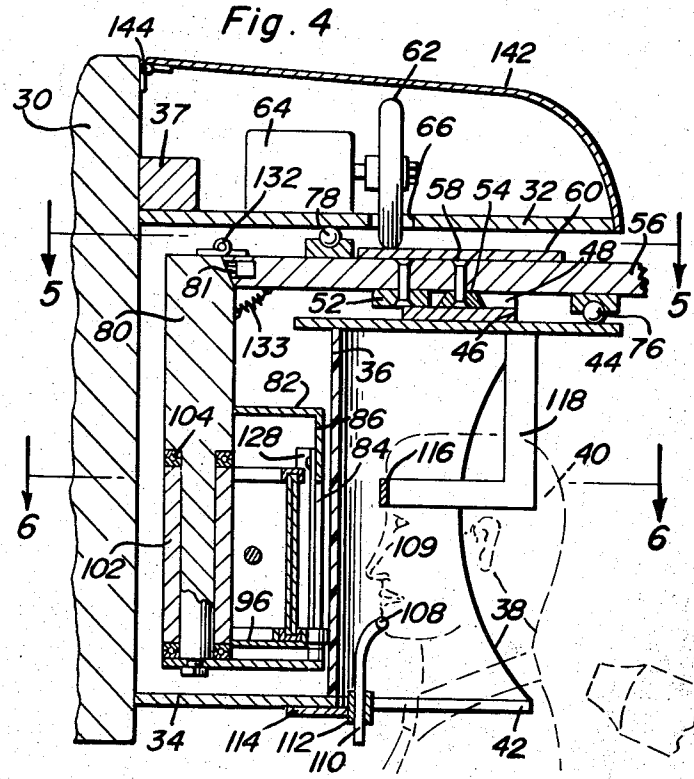

Fig. 10

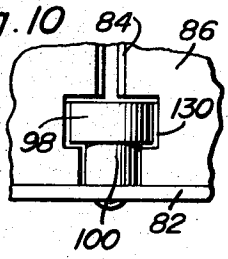

Paul E. Huchel

INVENTOR.

BY Clarence A. O'Brien and Harvey B. Jacobson

Attorneys

United States Patent Office

3,536,913

Patented Oct. 27, 1970

3,536,913

PANORAMIC X-RAY MACHINE FOR TAKING RADIOGRAPHS OF THE ORAL CAVITY

Paul E. Huchel, Tyler, Tex., assignor to Societe Anonyme dite: Societe des Automobiles Simca

Filed Nov. 17, 1967, Ser. No. 684,073

Int. Cl. G03b *41/16*

U.S. Cl. 250—61.5 8 Claims

ABSTRACT OF THE DISCLOSURE

An apparatus for making continuous panoramic radiographs of the oral cavity and adjacent areas in which the film is moved in a curved path substantially concentric with the ideal arch of the human dentition. The apparatus will take the X-ray when moving in either direction, that is from left to right as well as right to left and includes a relatively simple mechanism for moving the film holder and X-ray source in a path concentric with the ideal arch and at the same time move the film past an exposure opening for producing a panoramic view of the entire dentition on a single film with the film disposed as closely as possible to the surface of the face of the patient in order to reduce distortion while following a curve concentric with the ideal arch.

The present invention generally relates to apparatuses for making radiographs or X-ray pictures and is primarily conecrned with such an apparatus being used in conjunction with various phases of dental work and includes an X-ray source and a film cassette supported in a shielded holder all oriented in straight line relation with the path of the beam from the X-ray source to the film and film holder being obliquely upwardly through the jaw from the center thereof in a manner well known in the art.

An object of the present invention is to provide an apparatus in accordance with the preceding object including a mechanism for moving the X-ray source and shielded film holder and film therein in a substantially elliptical or parabolic path substantially concentric with an ideal arch thus moving the film so that it is in substantially the same relationship to the human dentition during its panoramic movement from one extreme end of the jaw or dentition, around the front of the jaw or dentition to the other extreme end thereof to reduce distortion as much as possible and to maintain a constant relationship of the film being exposed and the area being X-rayed.

Another object of the present invention is to provide an apparatus in accordance with the preceding object in which the film cassette is moved simultaneously with movement of the shielded cassette holder and X-ray source in underlying relation to a slit-like opening in the shielded cassette holder so that the film will be exposed to the X-ray source progressively as the panoramic X-ray picture is being taken.

Another important object of the present invention is to provide a panoramic X-ray machine which is versatile in utility in that it can be adapted for various dental uses as well as general purpose X-ray uses, simple in construction and operation, efficient in use, effective for taking an undistorted panoramic X-ray and comparatively inexpensive to manufacture and operate.

These together with other objects and advantages which will become subsequently apparent reside in the details of construction and operation as more fully hereinafter described and claimed, reference being had to the accompanying drawings forming a part hereof, wherein like numerals refer to like parts throughout, and in which:

FIG. 1 is a front view of the X-ray machine of the present invention;

FIG. 2 is a side elevational view of the construction of FIG. 1 with certain components thereof displaced angularly from the position illustrated in FIG. 1;

FIG. 3 is a top plan view of the construction of FIG. 2;

FIG. 4 is a sectional view taken substantially along section line 4—4 of FIG. 1 illustrating the structure for positioning the head in relation to the film cassette;

FIG. 5 is a plan sectional view taken generally along section line 5—5 of FIG. 4 illustrating the structure for moving the supporting assembly for the X-ray head and cassette holder in a path substantially concentric with an ideal arch of the human dentition;

FIG. 6 is a detailed sectional view taken along section line 6—6 of FIG. 4 illustrating further structural details of the apparatus;

FIG. 7 is a view similar to FIG. 6 but with the film cassette and shield angularly displaced;

FIG. 8 is a detailed sectional view of the film cassette, actuating roller and tubular member;

FIG. 9 is a detailed sectional view taken along section line 9—9 of FIG. 8 illustrating further structural details thereof;

FIG. 10 is a detailed view taken along reference line 10—10 of FIG. 8 showing the roller assembled with the shield; and

FIG. 11 is a perspective view of the film cassette.

Referring now specifically to the drawings, the numeral 10 generally designates the X-ray apparatus of the present invention including a vertically disposed supporting column 12 supported from the floor 14 by a suitable base plate 16 or the like and supported from the wall 18 by suitable bracket structure 20 of any suitable configuration thus supporting the column 12 in a vertical position in substantially parallel relation to the wall surface 18 but spaced therefrom. Alongside of the column 12, a pair of guide rails or rod-like members 22 are mounted on which a vertically movable carriage 24 is supported. The carriage 24 is elongated and is slidably engaged with the rails 22. The opposite sides of the carriage 24 are connected to cables 26 which are entrained over pulleys 28 at the upper end of the column 12 with the other ends of the cables 26 extending downwardly into the column 12 and connected to a suitable counterbalancing apparatus such as counterweights or the like.

The carriage 24 includes a vertically elongated member 30 which slides on the rails and includes an upwardly extending arm 32 rigid therewith adjacent the upper end thereof and a similar arm 34 adjacent the bottom thereof which supports a hollow member 36 thereon constructed of radiolucent material and which is substantially elliptical in configuration with the outer portion thereof being provided with an arcuate cut out area 38 for receiving the front portion of the head 40 of a person having an X-ray taken. The arm 34 is in the form of a plate having a semi-elliptical cutout 42 therein corresponding with the bottom edge of the upstanding hollow or tubular member 36 to receive the neck portion of the head 40 of the patient. The top end of the tubular member 36 is in supporting engagement with a circular plate 44 having a centrally disposed mounting block 6 thereon. The mounting block is provided with intersecting slots 48 and 50 which communicate with the upper surface thereof and which may be provided with straight side walls or downwardly diverging side walls for slidably receiving correspondingly shaped slides 52 and 54 which are pivotally supported from the undersurface of an elongated supporting arm 56. With the bottom plate or arm 34 being stationary, the tubular member 36 and the plate 44 as well as the block 46 are also stationary. Due to the construction of the slots 48 and 50 as well as the slides 52 and 54 which are pivotally attached to the arm 56 by pivot pins 58, rota-

tion of the arm **56** about a generally vertical, laterally shifting axis will cause longitudinal shifting of the arm **56** during its rotational movement. This structure is generally referred to as an ellipsograph and any point along the arm **56** will move in an elliptical path as the arm is rotated or swung in a horizontal plane.

For driving the arm **56** for rotation thereof, the upper surface thereof is provided with a plate **60** which is drivingly engaged by a friction wheel **62** driven by a reversible and variable speed motor **64** supported in a suitable manner on the arm or plate **32** with the friction wheel **62** extending through a slot-like opening **66** in the plate or arm **32** thus drivingly engaging the plate **60**. The motor **64** and wheel **62** may be moved radially in relation to the rotational axis of the arm **56** to vary the speed thereof or the motor **64** may be a variable speed motor controlled by a suitable rheostat or the like to vary the rotational speed of the arm **56**. As the arm **56** moves along its longitudinal axis, the relative movement between the plate **60** and the friction drive wheel **62** will be accommodated due to the friction engagement of the wheel **62** with the plate **60**.

At one end of the arm **56**, there is provided a depending support yoke **68** through which is connected a conventional X-ray head **70** which forms the source of the X-ray beam. The yoke **68** is adjustably attached to the end of the arm **56** by a suitable adjustment sleeve **72** provided with setscrew type locking elements or the like to enable the vertical position of the X-ray head **70** to be adjusted for optimum position in relation to a film holding and moving assembly generally designated by the numeral **74** supported by the other end of the arm **56**. To stabilize the arm **56**, a spherical type bearing assembly **76** is provided between it and the plate **44** and a similar spherical bearing assembly **78** is provided between the arm **56** and the plate **32**. Inasmuch as the head **70** is considerably heavier than the film holding and moving apparatus **74**, the bearing assembly **76** on the underside of the arm **56** is located between the axis of rotation of the arm **56** and the end thereof which supports the X-ray head **70** while the bearing assembly **78** is located between the arm **56** and the plate **32** on the opposite side of the pivot axis thus stabilizing the arm **56** during its swinging movement.

The film holding and moving apparatus **74** includes a depending support member **80** supported from the end of the arm **56** remote from the yoke **68** and which supports a lead shield **82** having a vertically disposed slot **84** therein. The shield **82** includes a generally semi-cylindrical lead wall **86** in which the slot **84** is formed to reveal the film cassette **88** and the film **89** therein through the slot **84** to expose the film when the X-ray head **70** is energized. The film cassette includes a peripheral channel-shaped frame **90** for receiving the film and also a pivotal closure door **92** to enable the film to be removed therefrom and placed therein. The cassette **88** is movably supported in a groove **94** in a support member **96** for movement thereof past the slot **84**. The movement of the cassette **88** is accomplished by a friction wheel **98** supported from the bottom portion **85** of shield **82** by pivot axle **100** and in frictional engagement with the stationary tubular member **36** and in engagement with the support member **96**. Thus, as the arm **56**, support **80** and shield **82** move in the path of the ideal arch, the film cassette **88** and film **89** therein will be moved a corresponding linear distance to expose the film progressively during the rotational movement of the arm **56**.

The support member **96** is rigidly connected with a sleeve **102** which is journaled on the depending support **80** by suitable bearing assemblies **104** so that the film cassette **88** and the holder or supoprt **96** therefor may be rotated about the vertical axis of the support member **80** as illustrated in FIGS. 6 and 7 as the roller **98** rolls around the outer surface of the transparent member **36** during accurate swinging movement of the arm **56**. To facilties removal of and replacement of the cassette **88**, it is provided with a transversely extending handle **106** on the interior thereof to enable the cassette to be easily grasped and removed when the cassette **88** is rotated to its extreme position so that a substantial portion thereof will be projecting beyond the rear edge of the shield **82**. Thus, a cassette with exposed film may be easily removed and another cassette with an unexposed film may be easily placed in position on the holder **96**. The pivotal closure **92** for the cassette **88** enables the film to be easily removed in the darkroom and an unexposed film may be easily inserted into the cassette. Any suitable type of closure mechanism may be provided for retaining the door **92** in closed condition.

In order to obtain a proper X-ray picture, the patient's head **40** must be stabilized and retained in position. This is accomplished by providing an adjustable chin engaging bar **108** supported by a forwardly and downwardly extending shank **110** which is adjustably supported in a sleeve **112** supported by a suitable bracket **114** from the bottom arm **34**. The chin bar **108** engages the recess or cavity formed in the chin of each individual so that a stable support will be engaged for the patient's head by the patient bringing his chin into engagement with the chin bar **108** with the chin **108** engaged in the groove or recess in the front portion of the chin. To stabilize the upper portion of the head **40**, a generally U-shaped strap member **116** is provided which engages the forehead and diverges rearwardly from the side edges of the forehead and is supported at the rear end thereof by upstanding brackets **118** in the form of straps anchored to the stationary top plate **44**. The bottom ends of the brackets or straps **118** are spaced apart a distance greater than the normal width of a person's head so that the person may walk into the machine and bring his forehead into engagement with the front of the strap **116** and the groove in his chin in engagement with the chin bar **108** which will accurately position is jaw for taking an X-ray of the oral cavity. To further stabilize the patient, especially those who may be somewhat frightened, elderly people, small children, invalids or the like, a pair of vertically disposed handrails **120** is provided alongside of the machine and attached to the wall in any suitable manner such as by brackets **122**. Thus, by the patient grasping the handrails **120**, they may pull themselves into proper engagement with the chin bar and forehead strap **116** and retain themselves in a stable condition during the movement of the X-ray head **70**, arm **56** and film cassette and shield assembly **74**.

For adjusting the width of the slot **84** in the shield thus varying the exposure characteristics, there is provided a pair of adjustable shutters **128** mounted on the inner surface of the arcuate wall **86** in any suitable manner to permit adjustment of the effective width of the slot **84** up to a maximum width which would enable the apparatus to be used with any standard type of X-ray head which has differences in emission characteristics. The shutter elements **128** are also constructed of lead shielding material and may be secured in place by slots and fasteners so that an effective shield will be retained and the width of the slot **84** may be effectively adjusted.

FIG. 10 illustrates the association of the roller with the shield **86** and the slot **84** in that a larger opening **130** is provided closely receiving the peripheral surfaces of the roller or wheel **98** so that the slot **84** will be substantially in direct alignment with the rotational center of the roller **98**. The X-ray head **70** is adjusted so that the X-ray beam will pass above the roller **98** and pass through the slot **84** for exposing the film in the cassette **88**.

The cassette **88** may be removed from the holder **96** at either extreme end of its movement and the linear dimension of the exterior surface of the tubular member **36** and the frame of the cassette are equal so that the cassette will be removed between its extremes of movement during movement of the shield **82** around and concentric with the tubular member **36**.

The support arm **80** for the film cassette and shield is pivotally attached to the supoprt arm **56** by a hinge **132** with a spring device **133** extending across the juncture to

urge the support arm **80** inwardly to retain the roller **98** in frictional engagement with the tubular member **36** and to enable rolling movement of the roller **98** on the tubular member **36** even though the tubular member **36** may have irregularities in the surface thereof. This construction also enables the support arm **80** to be pivoted upwardly to the inoperative position as illustrated in dotted line in FIG. 1 so that the X-ray head **70** may be employed for other uses in the dental X-ray field or for general X-ray purposes. When the arm **80** is pivoted upwardly, a contact switch **81** is engaged to deactivate motor **64**. A support arm **134** may then be brought into play either by inserting into a socket **37** provided through the carriage **24** or otherwise attached thereto either permanently or temporarily.

The arm **134** is provided with a forwardly extending portion **136** having a depending support assembly **138** including a film holder **140** and an adjustable head holder **141** so that the X-ray head may be employed in taking a cephalometric X-ray exposure. This is accomplished by having a removable short cone **69** to restrict X-rays that is interchangeable with a long cone **71** (shown in dotted line) for taking cephalometric X-rays. The head **70** is adjustable at **73** so that the head **70** will be at right angles to yoke **68** with adjustment **72** aligning the head with film holder **140**. This same arrangement may be employed for general X-ray purposes and for X-raying various portions of the anatomy as desired.

By adjusting the head using the lower part of nose **109** resting on chin engaging bar **108** and adjusting the U-shaped strap **116**, a panoramic picture of the frontal and maxillary sinus area can be taken thus enabling the condition of the sinus cavities and the like to be analyzed.

As illustrated in FIG. 4, the upper supporting arm **32** is provided with a housing or cover **142** attached to the vertical member **30** by hinge structure **144**. This housing cover may be plastic material, sheet metal or any other suitable material and conceals the operating mechanism. This cover also provides access for enabling removal or adjustment of the arm **134**.

Thus, with the present invention, a relatively simple and efficient structure has been provided to enable a panoramic X-ray picture to be made of the entire dentition during a single movement of the X-ray head and film holder with the patient remaining immobilized. The X-ray head and film is mounted on a rigid hollow arm or the like which follows a curved path substantially concentric with the ideal arch form and retains the film as close as possible to the surface of the jaw or face of the patient to reduce distortion. This enables a clearer radiograph of the oral cavity and adjacent areas which would enable a much better permanent record to be retained by various organizations, especially U.S. Government agencies for providing a good record of dental condition when a person enlisted in the Armed Forces and when they are discharged in order to substantiate any claim made relating to dental problems which may have developed during the term of service. This also enables a more effective identification procedure, especially of persons burned or otherwise injured to a point beyond visual recognition. Such identification purposes may be also significant in various hospitals, mental institutions, prisons and other similar organizations. This device would also be effective for diagnosis of various problems relating to the sinuses and would be useful for physicians diagnosing eye, ear, nose and throat conditions. The apparatus may be manufactured with a minimum number of moving parts, very little adjustment, very little maintenance, easily adapted to existing office space, requires less than one foot of floor space, may be easily cleaned and sterilized after each use, adjust to the patient rather than a patient being adjusted to the machine, enable the patient to either stand in a relaxed position or sit in a relaxed position such as in a wheelchair or the like, includes handrails fixed to the wall to steady the patient, requires less time in taking the picture, the X-ray picture may be taken from left to right as well from right to left, only one film to mount or process and reduces the exposure to radiation as compared with individual X-ray of each tooth or group of teeth.

The machine may be used to take a panoramic X-ray of complete maxillary and mandibular arches and bone structure, sinus evaluation, for taking a lateral head or cephalometric X-ray can be taken, parpical X-rays can be taken and the device may be converted for field use, text type X-rays and the like.

Conventional controls and electrical supply may be provided including various manual switches, rheostats and the like all of which are known in the art and form no particular part of the present invention.

The foregoing is considered as illustrative only of the principles of the invention. Further, since numerous modifications and changes will readily occur to those skilled in the art, it is not desired to limit the invention to the exact construction and operation shown and described, and accordingly all suitable modifications and equivalents may be resorted to.

What is claimed as new is as follows:

1. In an X-ray apparatus including an extra oral film holder and an X-ray source arranged in a line of sight to radiograph a denture of a patient in said line of sight, and means supporting the film holder and X-ray source for simultaneous movement about a patient uninterruptedly along a path concentric with the ideal arch of the patient while maintaining a constant relationship between the film holder, X-ray source and denture of the patient.

2. The structure as defined in claim **1** wherein said means supporting the X-ray source and film holder includes a supporting arm structure having the X-ray source at one end thereof and the film holder at the other to maintain the line of sight therebetween, means supporting said arm for rotation in a substantially horizontal plane and imparting simultaneous longitudinal movement during such rotation thus moving the arm, X-ray source and film holder in an arcuate path substantially concentric with the ideal curve of the maxillary and mandibular dental arches of a human dentition.

3. The structure as defined in claim **2** wherein said film holder includes a film cassette of arcuate construction, a shield impervious to passage of X-rays disposed in the line of sight, said shield including a slot-like opening to enable exposure of the film in the film cassette disposed in alignment with the slot-like opening, and means moving the film cassette and film therein past the slot-like opening in response to rotational movement of the arm in a horizontal plane.

4. In an X-ray apparatus including a film holder and an X-ray source arranged in a line of sight to radiograph a denture of a patient in said line of sight, and means supporting the film holder and X-ray source for movement about a patient in a path concentric with the ideal arch of the patient, said means supporting the X-ray source and film holder including a supporting arm structure having the X-ray source at one end thereof and the film holder at the other to maintain the line of sight therebetween, means supporting said arm for rotation in a substantially horizontal plane and imparting simultaneous longitudinal movement during such rotation thus moving the arm, X-ray source and film holder in an arcuate path substantially concentric with the ideal curve of the maxillary and mandibular arches of a human dentition, said film holder including a film cassette of arcuate construction, a shield impervious to passage of X-rays disposed in the line of sight, said shield including a slot-like opening to enable exposure of the film in the film cassette disposed in alignment with the slot-like opening, and means moving the film cassette and film therein past the slot-like opening during movement of the arm in a horizontal plane, said means including a drive roller frictionally engaged with the film cassette on one side of the rotational axis thereof, the other surface of the roller

on the opposite side of the rotational axis thereof being engaged with a curve radiolucent tubular member disposed in adjacent relation to the surface of the jaws of the patient having an X-ray taken to drive the cassette to move the film in relation to the slot-like opening during movement of the source and film holder.

5. The structure as defined in claim 4 together with reversible motor means to drive the supporting arm, X-ray source and film holder in opposite directions to enable an X-ray to be taken in both directions of movement of the X-ray source and film holder.

6. The structure as defined in claim 5 together with means positioning the chin and forehead of a patient in relation to a radiolucent member with the radiolucent member being tubular and curved in a manner substantially concentric with the ideal arch with a cutout area receiving the head portion of a patient.

7. The structure as defined in claim 4 wherein said means supporting said arm includes a mounting block stationarily supported in a substantially horizontal position and provided with intersecting slots in the upper surface thereof, said arm extending across the top surface of the block and including a pair of slides pivotally supported from the undersurface of the arm and slidable in the intersecting slot whereby rotation of the arm about

substantially a vertical axis will cause longitudinal shifting of the arm so that any part along the arm will move in a substantially elliptical path.

8. The structure as defined in claim 7 wherein said arm includes a friction plate on the upper surface thereof, and a motor driven friction drive wheel having the periphery thereof drivingly engaging the friction plate to enable rotational driving movement of the arm as it shifts longitudinally during such rotation, said means supporting said arm includes vertically adjustable means to enable variation in the line of sight for receiving different height patients.

References Cited

UNITED STATES PATENTS

1,408,559	3/1922	Zulauf	250—69 X
2,798,958	7/1957	Hudson et al.	250—61.5
3,045,118	7/1962	Hollman et al.	250—61.5

WILLIAM F. LINDQUIST, Primary Examiner

A. L. BIRCH, Assistant Examiner

U.S. Cl. X.R.

250—50, 53, 65, 70, 105

UNITED STATES PATENT OFFICE

CERTIFICATE OF CORRECTION

Patent No. 3,536,913 Dated October 27, 1970

Inventor(s) Paul E. Huchel

It is certified that error appears in the above-identified patent and that said Letters Patent are hereby corrected as shown below:

Column 1, lines 4 and 5, delete "assignor to Societe Anonyme dite: Societe des Automobiles Simca".

SIGNED AND SEALED FEB 2 1971

(SEAL)
Attest:

Edward M. Fletcher, Jr.
Attesting Officer

WILLIAM E. SCHUYLER, JR.
Commissioner of Patents

USCOMM-DC 60376-P69
* U.S. GOVERNMENT PRINTING OFFICE : 1969 O—366-334