March 5, 1940. F. E. TWISS 2,192,512

PUMP

Filed Jan. 7, 1937 2 Sheets-Sheet 1

Fig. 1.

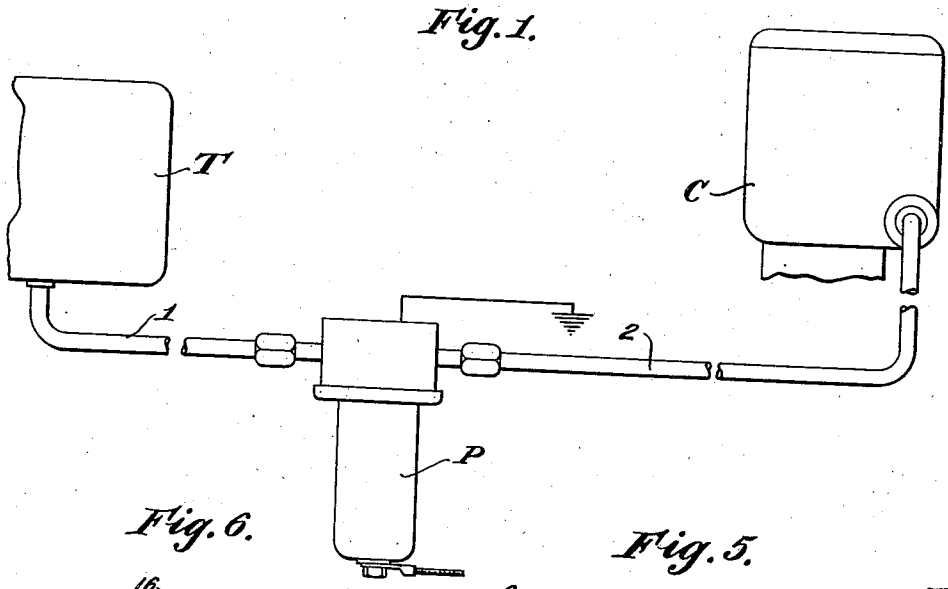

Fig. 6.

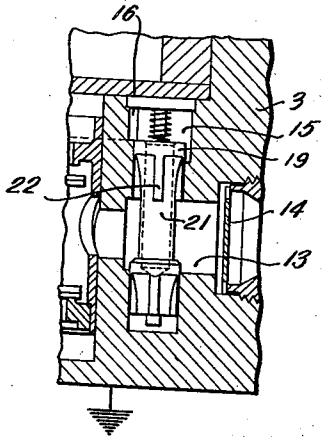

Fig. 5.

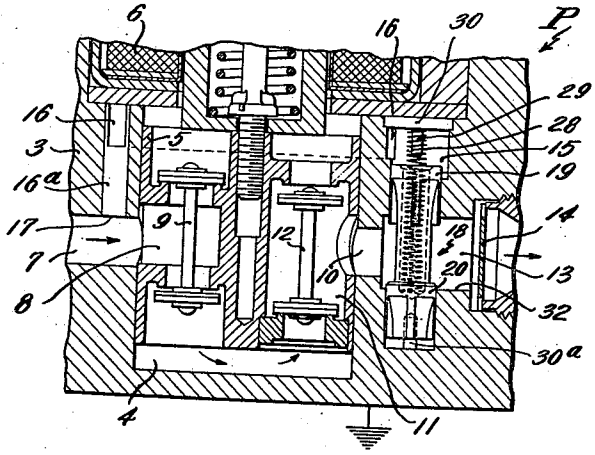

Fig. 2.

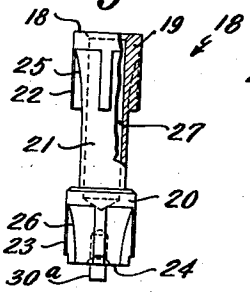

Fig. 3.

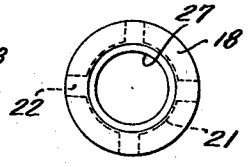

Fig. 4.

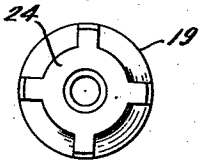

Inventor,
Frank E. Twiss,
by Roberts Cushman & Woodberry
Attys.

March 5, 1940. F. E. TWISS 2,192,512

PUMP

Filed Jan. 7, 1937 2 Sheets-Sheet 2

Fig. 10.

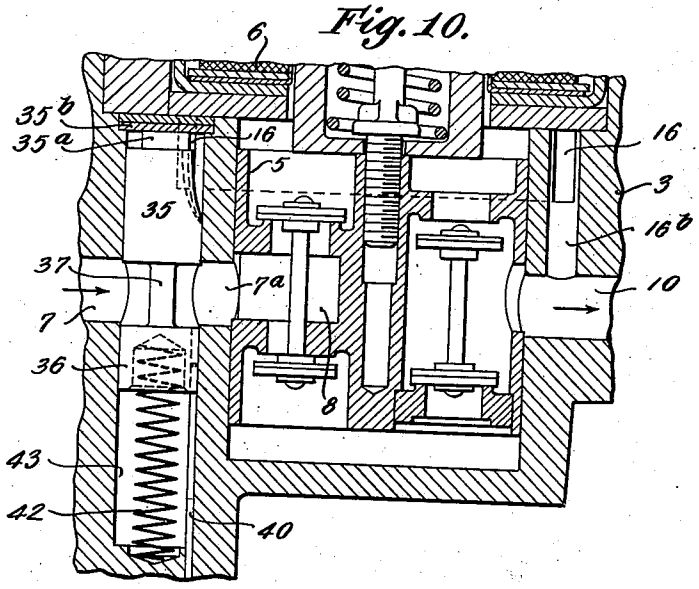

Fig. 7.

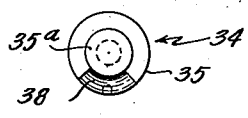

Fig. 8.

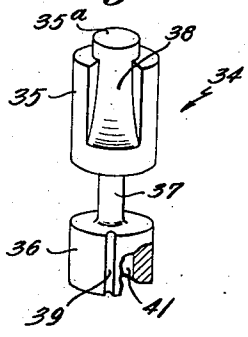

Fig. 9.

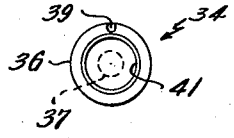

Fig. 11.

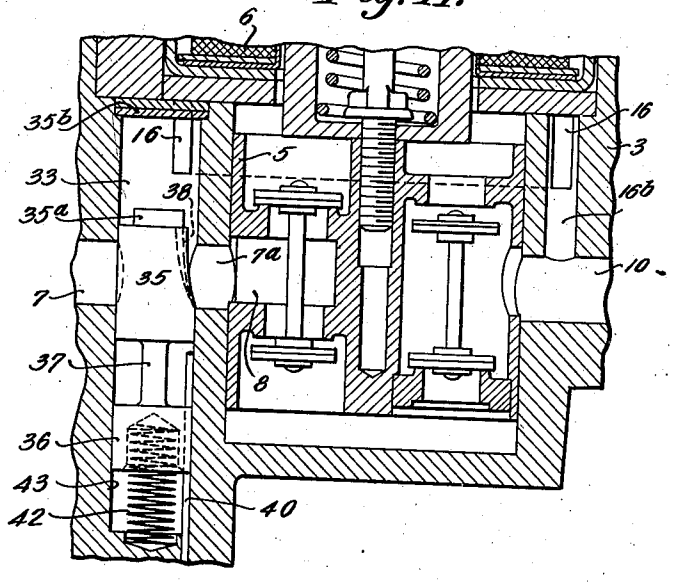

Inventor,
Frank E. Twiss,
by Roberts Cushman & Woodberry
Attys.

Patented Mar. 5, 1940 2,192,512

UNITED STATES PATENT OFFICE

2,192,512

PUMP

Frank E. Twiss, Taunton, Mass., assignor to F. E. Twiss Co., Inc., Boston, Mass., a corporation of Massachusetts

Application January 7, 1937, Serial No. 119,455

16 Claims. (Cl. 103—42)

This invention pertains to pumps, for instance pumps such as are designed to supply liquid fuel to the carburetor of an internal combustion engine. Such a pump, of the magnetically actuated, high speed vibratory type is illustrated in patent to Twiss No. 2,043,270, dated June 9, 1936. Certain improvements in the patented pump are disclosed in a copending application for Letters Patent Serial No. 68,649, filed May 13, 1936, said application disclosing, inter alia, a by-pass arrangement whereby the delivery of fuel to the carburetor is automatically stopped when the fuel level at the carburetor reaches a predetermined point, even though the pump continue to operate, thereby to prevent overflow of or excess fuel at the carburetor. The by-pass arrangement of the aforesaid copending application includes a spring loaded relief valve which is designed to respond to a fluid pressure at the discharge of the pump corresponding to the predetermined desired maximum level at the carburetor,—the valve gradually opening in response to rise in pressure thereby to permit the fuel from the delivery of the pump to by-pass around the pump mechanism. While such prior arrangement is operative and useful for the intended purpose, the ordinary spring-loaded valve tends to open and close gradually and lifts against a constantly increasing resistance. Moreover, when the difference in level between the carburetor and pump is small, such a simple spring-loaded valve can not readily be made sufficiently delicate to respond to the very slight pressure differential available for moving it.

Objects of the present invention are to provide an improved by-pass arrangement for pumps of the class described, including a controlling valve which is normally substantially balanced and thus very sensitively responsive to pressure differential but which will remain open without substantial vibration or chatter until normal pressure conditions are restored and will then close suddenly and completely. A further object is to provide an improved by-pass arrangement of simple construction readily capable of application to pumps of the type referred to without requiring any change in the pumping mechanism per se and which is durable and cheap to make and install.

A further object of the invention is to provide a by-pass arrangement capable of installation at the intake of the pump, if desired, so that, even if the by-pass valve should leak after a long period of use or for other reason, the level at the carburetor will not be abnormally raised.

Other objects of the invention and advantages thereof will be pointed out in the following more detailed description and by reference to the accompanying drawings, wherein:

Fig. 1 is a fragmentary diagrammatic elevation illustrating a pump of the type referred to, associated with a fuel tank and carburetor;

Fig. 2 is an elevation, to large scale and partly in vertical section, of an improved piston valve useful in the improved by-pass arrangement of the present invention;

Fig. 3 is a view, to larger scale, of one end of the valve of Fig. 2;

Fig. 4 is a view, to large scale, of the opposite end of the valve of Fig. 2;

Fig. 5 is a fragmentary diametrical vertical section, to large scale, through a pump, such as that of Fig. 1, having the present improvements embodied therein, the by-pass arrangement being shown as it appears when the pump is operating in the normal manner to deliver fuel to the carburetor;

Fig. 6 is a fragmentary section, similar to Fig. 5, showing the by-pass arrangement as it appears when the pressure at the fuel level at the carburetor has reached such a point that no further delivery of fuel is desired;

Fig. 7 is a view of one end of a controlling valve of modified construction designed for installation at the inlet side of the pump;

Fig. 8 is a perspective view, partly broken away and in section, of the valve of Fig. 7;

Fig. 9 is a view of the opposite end of the valve of Fig. 8;

Fig. 10 is a fragmentary vertical section through a pump such as that of Fig. 1, but employing the valve of Figs. 7, 8 and 9,—the controlling valve being shown in the normal position, that is to say, with the pump delivering to the carburetor; and

Fig. 11 is a view similar to Fig. 10 but showing the controlling valve in position to block further intake of fuel, thereby preventing delivery of fuel to the carburetor.

Referring to Figs. 1 to 6 of the drawings, the fuel supply tank is indicated at T, the pump at P and the carburetor at C,—the fuel flowing from the tank to the pump through the pipe 1, and flowing from the pump to the carburetor through the pipe 2.

The pump P may be of the general type disclosed in the patent above referred to or in my aforementioned copending application,—com-

prising a casing 3 having therein a pump cylinder 4 in which a piston 5 is reciprocated very rapidly, and with a short stroke by magnetic means indicated generally at 6. The casing is provided with an inlet duct or passage 7 which communicates with the supply pipe 1 and which is always in communication with an inlet chamber 8 in the piston 5, the piston having a valve device 9 which controls the delivery of fluid from the inlet chamber 8. The casing has an outlet duct or passage 10 which is always in communication with an outlet chamber in the piston, said outlet chamber being furnished with a valve device 12 which automatically controls the flow of fluid from the pump cylinder into the outlet duct or passage 10. The outlet duct or passage 10 merges with a delivery orifice 13 in the wall of the casing, and this orifice is preferably provided with a priming valve 14, such as disclosed in my copending application Serial No. 119,456, filed on even date herewith, patented June 14, 1938, No. 2,120,448.

In accordance with the present invention, a vertical bore 15 within the thickness of the casing diametrically intersects the outlet orifice 13. One end of this bore 15 communicates with a by-pass passage 16 (which may be a cored opening in the casing which extends around to a point directly above the inlet passage 7 with which it communicates by means of a vertical bore 16ª, which enters the inlet opening 7 at the point 17.

The bore 15 constitutes a cylindrical guideway for a piston valve 18 (Figs. 2, 3 and 4). This piston valve comprises a cylindrical by-pass closing head 19 and a cylindrical actuating head 20, united by a stem portion 21 of substantially smaller diameter than the heads. The heads are designed to slide in contact with the walls of the bore 15, and are preferably provided with elongate peripherally spaced guide fins 22 and 23, respectively. Preferably, the extreme lower or outer end 24 of the piston, as viewed in Fig. 2, is of a diameter approximating that of the stem 21. The peripheral surface of the stem gradually increases in diameter, as shown at 25, until it merges with the full diameter of the head 19. Likewise the valve gradually increases in diameter from the end 24, as shown at 26, until it attains the full diameter of the head 20.

The stem portion 21 is preferably provided with an elongate bore 27 leading from the end of the head 19, such bore being designed to receive a very light, elongate and open coiled spring 28, one end of which rests upon the bottom of this bore 27, and whose other end is positioned by embracing a pin 29 projecting from a disk 30 seated on an annular shoulder at the end of the bore 15. An axial boss 30ª, of lesser diameter than the head, projects from the head 20 of the piston valve, and its lower flat end normally contacts the end of the bore 15. Preferably, there is a slight clearance, for example, 0.005", between the head 20 and the wall of the bore, so that fluid at outlet pressure leaks into the space below the head.

In the normal operation of the pump, the valve 18 occupies the position indicated in Fig. 5, its lower head 20 being disposed just within the lower part of the bore 15. In this position the pressure of the fluid flowing through the outlet passage 10 and the orifice 13 acts with substantially equal force downwardly and upwardly against the inner or adjacent surfaces of the heads 20 and 19 respectively, but the upper end of the piston is exposed, by means of the by-pass passage 16, to the lesser pressure of the inlet 7. That portion of the outer or lower end surface of the head 20 which is exposed within the lower end of the bore 15 receives outlet pressure by reason of leakage past the head 20 but the end of the boss 30ª is normally protected from fluid pressure by contact with the bottom wall of the bore. The normally exposed areas of the heads of the valve are so proportioned with reference to the normal inlet and outlet pressures that the algebraic sum of the effective upwardly and downwardly acting pressures is normally opposite and very nearly equal, though slightly less, than the force exerted by the spring,—the spring exerting a very slight preponderance of force tending to hold the valve in by-pass closing position, as shown in Fig. 5.

However, if the fuel level in the carburetor reaches a predetermined abnormal point, with a corresponding abnormal pressure in the outlet orifice 13, the differential pressure available at the upper and lower ends of the piston valve 18 causes the latter to rise slightly in opposition to the spring 28. As soon as the piston valve rises, even slightly, full fluid pressure acts upwardly upon the entire area of the lower end of the head 20, thus snapping the piston valve upwardly to the position shown in Fig. 6. Since the head 20 does not leave the bore 15 when the valve is fully open, and as there is a body of fluid trapped beneath it in the end of bore 15, the valve is restrained against vibration or chatter in response to the rapidly reciprocating piston. When the valve is in this position, pressure fluid from the outlet orifice 13 is permitted to flow through the bore 15 and between the fins 22 of the piston valve, and thence through the by-pass passage 16 back to the inlet duct or passage 7. Thus a continued operation of the pump merely circulates fluid through the delivery or outlet passage 10, the bore 15, and the by-pass passage 16 to the inlet, without further delivery of fluid through the outlet orifice 13. However, when the pressure at the orifice 13 drops slightly, corresponding to a dropping to normal level at the carburetor, the spring 28 reasserts itself, pushing the piston 18 back to its normal position. During the latter part of this movement, the head cooperates with the closed lower end of the bore as a dash-pot to cushion the valve in closing and thus to avoid noise and wear.

It will be apparent that with this arrangement, the valve closing spring 28 may be very light so that it exerts but little pressure,—the valve being very nearly balanced under normal conditions, and as this spring may be made quite long and with an open coil, its resistance to upward movement of the valve need not increase abnormally as the valve rises. Furthermore, and more important, the lift of the valve, after its first initiation, takes place suddenly and with a snap action so that the by-pass is opened to its full extent at once rather than by a gradual and slow action, such as commonly takes place in prior constructions. The cessation of fuel delivery to the carburetor is thus substantially instantaneous so that there is no danger of overflow at the carburetor due to lag of the controlling device.

Referring now to Figs. 7 to 11 inclusive, wherein a modified form of the device is illustrated, like numerals have been applied to parts corresponding to those of the preceding figures. In this arrangement the by-pass passage 16 is con-

nected to the outlet duct or passage 10 by means of a relatively small vertical bore 16b, but, at the diametrically opposite side of the pump casing, a vertical, valve guiding bore 33 is arranged to intersect the inlet duct or passage 7 and to connect the by-pass passage 16 with the inlet. This bore 33 receives a piston valve 34 having the upper by-pass closing head 35 and the lower head 36,—the two heads being connected by a stem 37 of a diameter substantially smaller than that of the heads. The two heads are arranged to slide within the bore 33, there being a slight clearance between the head 36 and the wall of the bore so that the space below the lower head 36 is normally filled with fluid at the inlet pressure. The head 35 is furnished with a lateral recess 38 extending downwardly from its upper end and opening at its peripheral surface. Preferably the lower head 36 is furnished with a longitudinal slot 39 which receives a rib 40 projecting from the inner wall of the bore 33, the rib and recess 39 preventing the piston from turning and keeping the recess 38 always at the same side as the inner portion 7a of the inlet passage 7. Preferably, the lower head 36 is furnished with an upwardly directed bore 41 which receives the upper end of a light, open-coiled spring 42, whose lower end rests upon the bottom of the bore 33 and which, like the spring 28, is designed to restore the valve to by-pass-closing position when the outlet pressure returns to normal. The upper head 35 of the piston is preferably furnished with an upwardly directed boss 35a of a diameter substantially less than that of the head, such boss normally engaging a plate 35b seated against a shoulder at the upper end of the bore 33.

Normally the piston valve 34 is held in the upper inoperative position shown in Fig. 10, by the spring 42 just as the valve 18 is normally held in closed position by spring 28. In this position the boss 35a engages the plate 35b so that the effective area of the piston which is exposed to the pressure fluid in the upper end of the bore 33 is that represented by the difference between the areas of the piston head 35 and the boss 35a. The pressure acting upon this differential area is that of the pressure fluid at the outlet duct 10 of the pump, such pressure fluid acting through the bore 16b and the by-pass passage 16. Normally, the force exerted by the spring 42 (as in the case of the spring 28 acting on valve 18) is just sufficient to overcome the slight preponderance of downward pressure normally acting upon the differential area of the piston head, as compared with the normal upward pressure acting on the lower head 36, but when the pressure at the outlet orifice rises to a predetermined slight extent, the piston is moved downwardly very slightly in opposition to the action of the spring. The slightest movement of the piston downwardly removes the upper surface of the boss 35a from the plate 35b, thus admitting the pressure fluid to act over the whole area of the piston head, which quickly drives the piston downwardly to the position shown in Fig. 11. In this position the pressure fluid is permitted to flow from the delivery duct 10 through the bore 16b and the by-pass passage 16 into the bore 33, and thence down through the recess 38 in the piston head 35 to the inner portion 7a of the inlet passage. Thus the further operation of the pump merely circulates the fluid through the pump chambers and around the by-pass passage, while at the same time the inlet 7 is entirely cut off from the pump by the interposition of the piston head 35. With this arrangement, even though the piston head 35 should not fit tight or be completely leakproof in the bore 33, there is substantially no danger that continued operation of the pump will build up undue pressure in the delivery duct 10.

When the pressure drops at the delivery duct 10, the spring 42 immediately becomes effective to lift the piston valve, and as soon as the valve reaches the position of Fig. 10, it is substantially balanced by the pressures acting at the exposed surfaces of its heads, so that it remains safely in this inoperative position until the pressure at the outlet again rises to a definite point.

In the above description, for convenience, such terms as "up"; "down"; "rises"; "drops"; "top"; "bottom", etc. have been employed, but without intent thereby to impose any limitation upon the position in which the pump is used, since it is capable of effective operation in substantially any position.

While certain desirable embodiments of the invention have been shown by way of example, it is to be understood that the invention is not necessarily limited to these particular embodiments but is regarded as broadly inclusive of any equivalent arrangements within the terms of the appended claims.

I claim:

1. A fuel pump of the vibratory type comprising a casing having therein a cylinder and a reciprocatory piston, the casing having an inlet duct leading to the cylinder and an outlet orifice leading therefrom and a by-pass passage leading around the cylinder from the outlet orifice to the inlet duct, and a sliding, pressure-actuated valve for controlling the inlet to said by-pass passage, means normally holding the valve in by-pass-closing position, said valve comprising an actuating head having an area of its end surface which is not normally exposed to the outlet pressure, said surface being exposed to outlet pressure at the initiation of the opening movement of the valve, whereby pressure acting on said surface suddenly completes such movement, the actuating head also having an area of its end surface which is normally exposed to outlet pressure and which is so proportioned as to initiate opening movement of the valve when the outlet pressure exceeds a predetermined value.

2. A fuel pump of the vibratory type comprising a casing having therein a cylinder and a reciprocatory piston, the casing having an inlet duct leading to the cylinder, an outlet duct leading therefrom, and a by-pass passage leading around the cylinder from the outlet orifice to the inlet duct, the casing having a cylindrical bore closed at one end and diametrically intersecting the outlet duct, and a piston valve sliding in said bore, said valve including a by-pass-closing head, and a second head axially spaced therefrom, the heads being of substantially the same diameter, the by-pass-closing head having a tapering portion which merges with the stem at the inner end of the head, and the second head having a portion which tapers toward its outer end surface, the tapering portions of the two heads having peripherally spaced guide fins for contact with the inner wall of the bore, and a spring tending to move the valve to by-pass closing position, the inner ends of the heads being of substantially equal effective areas and being exposed to the fluid pressure in the outlet duct, and means for conducting pressure fluid from the outlet duct to

act upon a portion at least of the area of the second head, the outer end surface of the by-pass-closing head being normally exposed to inlet pressure, the normally exposed areas of the two heads being so proportioned that at normal outlet pressure the valve is nearly balanced, but when exposed to abnormally high outlet pressure moves toward by-pass opening position.

3. A fuel pump of the vibratory type comprising a casing having therein a cylinder and a reciprocatory piston, the casing having an inlet duct leading to the cylinder, an outlet duct leading therefrom, and a by-pass passage leading around the cylinder from the outlet duct to the inlet duct, the casing having a cylindrical bore closed at one end and diametrically intersecting said outlet duct, and a piston valve sliding in said bore, said valve including a by-pass-closing head and a second head axially spaced therefrom, and a stem uniting said heads, the heads being of substantially the same diameter, the valve having therein an elongated axial socket extending inwardly from the outer end of one of the heads, and a light open coiled spring seated in the socket and having its outer end abutting one end wall of the valve-guiding bore, the inner ends of the heads being of the same effective area and being exposed to the fluid pressure in the outlet duct, means for conducting pressure fluid from the outlet duct to act upon a portion at least of the area of the second head, the outer end surface of the by-pass-closing head being normally exposed to inlet pressure, the normally exposed areas of the outer end surfaces of the two heads being so proportioned that at normal outlet pressure the valve is nearly balanced, but when exposed to abnormally high outlet pressure moves toward by-pass opening position.

4. A fuel pump of the vibratory type comprising a casing having therein a cylinder and a reciprocatory piston, the casing having an inlet duct leading to the cylinder, and an outlet duct leading therefrom, and a by-pass passage leading around the cylinder from the outlet to the inlet duct, and a piston valve for controlling the flow of fluid through the by-pass passage, said valve being arranged to slide in a bore intersecting one of said ducts, said bore being substantially closed at one end, the valve including a by-pass-closing head having a substantial portion of its outer end surface normally exposed to the fluid pressure subsisting in the by-pass passage, the valve also including a dashpot head which is axially spaced from the first-named head and disposed within the closed end of the bore, the inner surfaces of the heads being of substantially equal effective areas and exposed to the pressure of the fluid flowing through that duct which is intersected by the valve-receiving bore, the dashpot head sliding with a slight clearance in the closed end of the bore so that said closed end receives pressure fluid by leakage past the dashpot head from the last-named duct, and means tending to hold the valve in by-pass-closing position.

5. A fuel pump of the class described comprising a casing having therein a cylinder and a reciprocatory piston, the casing having inlet and outlet ducts leading respectively to and from the cylinder, and a by-pass passage leading around the cylinder from one of said ducts to the other, the casing having a cylinder bore closed at one end and transversely intersecting one of said ducts, the closed end of the bore normally communicating by means of a restricted passage with said latter duct, and a piston valve arranged to slide in said bore, said valve including axially spaced heads, one of which normally closes the by-pass passage and has a substantial portion at least of its outer end surface normally exposed to the fluid pressure subsisting in the by-pass passage, the other valve head being a dashpot head and disposed in the closed end of the bore, the inner ends of the heads being of substantially equal effective areas and exposed to the pressure of the fluid flowing through that duct which is intersected by the valve-receiving bore, a boss projecting from one of said heads and having an end surface which normally closely contacts a fixed surface of the casing whereby said end surface of the boss is normally protected from the fluid pressure to which the remainder of the outer surface of said latter head is normally exposed, and a spring urging the valve toward by-pass-closing position, the parts being so designed and arranged that the algebraic sum of the pressures on the normally exposed surfaces of the heads is slightly less than the force exerted by the spring and opposite thereto whereby the valve is nearly balanced, slight movement of the valve away from normal position separating the end surface of said boss from the surface with which it normally contacts, thereby increasing the effective fluid pressure on the head from which the boss projects, thereby quickly completing the movement of the valve.

6. A fuel pump of the class described comprising a casing having therein a cylinder and a reciprocatory piston, the casing having inlet and outlet ducts leading respectively to and from the cylinder, and a by-pass passage leading around the cylinder from one of said ducts to the other, the casing having a cylindrical bore closed at one end and transversely intersecting one of said ducts, the closed end of the bore normally communicating by means of a restricted passage with said latter duct, and a piston valve arranged to slide in said bore, said valve including axially spaced heads, one of which normally closes the by-pass passage and has a substantial portion at least of its outer surface normally exposed to the fluid pressure subsisting in the by-pass passage, the other valve head being a dashpot head and disposed in the closed end of the bore, the inner ends of the heads being of substantially equal effective areas and exposed to the pressure of the fluid flowing through that duct which is intersected by the valve-receiving bore, means normally protecting a portion of the outer end of one of said heads from the fluid pressure to which the remainder of the outer end of said head is exposed, and spring means urging the valve toward by-pass-closing position, the parts being so designed and arranged that the algebraic sum of the pressures on the normally exposed surfaces of the heads is slightly less and opposite to the force exerted by the spring whereby the valve is normally nearly balanced, any movement of the valve from normal position increasing the area of the second head which is exposed to fluid pressure whereby the valve is quickly moved to the limit of its path of travel.

7. A fuel pump of the class described comprising a casing having therein a cylinder and a reciprocatory piston, the casing having inlet and outlet ducts leading respectively to and from the cylinder, and a by-pass passage leading around the cylinder from one of said ducts to the other, the casing having a cylindrical bore closed at one end and transversely intersecting one of said ducts, and a piston valve arranged to slide in said

bore, said valve including axially spaced heads, one of which normally closes the by-pass passage and the other of which is disposed in the closed end of the bore, the inner ends of the heads being of substantially equal effective areas and exposed to the pressure of the fluid flowing through that duct which is intersected by the valve-receiving bore, the outer ends of the heads having areas respectively exposed to the fluid pressures which subsist in the by-pass passage and in the closed end of the bore, respectively, the closed end of the bore communicating by means of a leak passage with the last-named duct, said exposed areas of the outer ends of the heads being of such relative extents and so related to the pressures to which they are respectively exposed that the valve normally has a slight bias to move to by-pass-opening position, and means normally slightly overcoming such bias, the parts being so constructed and arranged that slight movement of the valve toward by-pass-opening position suddenly increases the area of one head which is exposed to pressure, thereby insuring quick movement of the valve to full open position.

8. A fuel pump of the vibratory type comprising a casing having therein a cylinder and a reciprocatory piston, the casing having an inlet duct leading to the cylinder, an outlet duct leading therefrom, and a by-pass passage leading around the cylinder from the outlet orifice to the inlet passage, the casing having a cylindrical bore closed at one end and transversely intersecting the outlet duct, and a valve sliding in said bore, said valve including a by-pass-closing head and an actuating head, the heads being axially spaced and of substantially the same diameter, the inner ends of the heads being of substantially equal effective areas and exposed to the fluid pressure subsisting in the outlet duct, the outer end of the by-pass-closing head being exposed to inlet pressure, the actuating head sliding with slight clearance in the closed end of the bore, a portion only of the outer end surface of said actuating head normally engaging the end wall of the bore, the remainder of said end surface being normally exposed to outlet pressure within said closed end of the bore, the relative areas of said portions of said end surface, with respect to the normal difference in inlet and outlet pressures, being such that the valve has a slight bias toward opening movement, and means normally slightly overcoming said bias whereby the valve is nearly balanced, the parts being so constructed and arranged that when the valve begins to open in response to abnormal outlet pressure substantially the entire outer end surface of the actuating head is exposed to outlet pressure, thereby suddenly move the valve to full open position.

9. A fuel pump of the vibratory type comprising a casing having therein a cylinder and a reciprocatory piston, the casing having an inlet duct leading to the cylinder, and an outlet orifice leading therefrom, and a by-pass passage leading around the cylinder from the outlet orifice to the inlet duct, and a piston valve for controlling the flow of fluid through the by-pass passage, said valve including a by-pass-closing head, an actuating head, and a stem uniting said heads, the inner end surfaces of the heads being normally exposed to outlet pressure, the outer end surface of the by-pass-closing head normally being exposed to inlet pressure, means normally protecting a portion at least of the outer end surface of the actuating head from outlet pressure, a spring normally operative to hold the piston valve nearly balanced in by-pass-closing position, the parts being so constructed and arranged as to admit outlet pressure to act upon substantially the entire area of the outer end surface of the actuating head when the valve begins to move toward by-pass-opening position, thereby suddenly to complete such movement.

10. A fuel pump of the vibratory type comprising a casing having therein a cylinder and a reciprocatory piston, the casing having an inlet duct leading to the cylinder, an outlet orifice leading therefrom, and a by-pass passage leading around the cylinder from the outlet orifice to the inlet duct, and a piston valve for controlling the flow of fluid through the by-pass passage, said valve including a by-pass-closing head, an actuating head, and means rigidly uniting the heads in axially spaced relation, the inner ends of the heads being of substantially equal effective areas and exposed to the fluid pressure subsisting in the outlet duct, the entire outer end surface of the by-pass-closing head normally being exposed to inlet pressure, the outer end surface of the actuating head comprising a portion which is normally exposed to outlet pressure and a portion which is normally protected from outlet pressure, the areas of said portions being so related, with reference to the normal difference in inlet and outlet pressures, that the algebraic sum of the effective pressures tends to cause the valve to open, and spring means normally slightly overbalancing said tendency.

11. A fuel pump of the vibratory type comprising a casing having therein a cylinder and a reciprocatory piston, the casing having an inlet duct leading to the cylinder, an outlet orifice leading therefrom, and a by-pass passage leading around the cylinder from the outlet orifice to the inlet duct, and a valve for controlling the flow of fluid through the by-pass passage, said valve including a by-pass-closing head, an actuating head, and means rigidly uniting the heads, the inner end surfaces of the heads being normally exposed to outlet pressure, the outer end surface of the by-pass-closing head normally being exposed to inlet pressure, the outer end surface of the actuating head comprising a portion which is normally exposed to outlet pressure and a portion which normally abuts a protecting surface, the areas of said portions being so related with reference to the normal difference in inlet and outlet pressure as to cause the valve to have a slight bias toward opening, and a light coiled spring normally operative slightly to overcome said bias thereby nearly to balance the valve, the parts being so designed and arranged that upon slight opening of the valve in response to abnormal outlet pressure the entire area of the outer end surface of the actuating head is exposed to outlet pressure thereby suddenly moving the valve to full open position.

12. A fuel pump of the class described comprising a casing having therein a cylinder and a reciprocatory piston, the casing having inlet and outlet ducts leading respectively to and from the cylinder, and a by-pass passage leading around the cylinder from one of said ducts to the other, the casing having a cylindrical bore transversely intersecting the inlet passage, and a piston valve arranged to slide in said bore, said valve including spaced heads, one of which normally closes the by-pass passage, a stem uniting the heads, the head which normally closes the by-pass passage having a recess extending from its outer end to a point in its peripheral surface, balancing means

normally holding the valve nearly balanced in by-pass-closing position, the outer end surface of the by-pass-closing head comprising an area which is normally exposed to by-pass pressure and which is so proportioned that when by-pass pressure becomes excessive the valve will begin to open, said end surface also comprising a normally protected area so arranged that upon initiation of the opening movement of the valve it is exposed to by-pass pressure, whereby the valve is quickly moved until the recess in the by-pass-closing head is positioned to connect the by-pass passage to the inlet duct.

13. A fuel pump of the class described comprising a casing having therein a cylinder and a reciprocatory piston, the casing having inlet and outlet ducts leading respectively to and from the cylinder, and a by-pass passage leading around the cylinder from one of said ducts to the other, the casing having a cylindrical bore closed at one end at least and transversely intersecting the inlet passage, and a piston valve arranged to slide in said bore, said valve including axially spaced heads, one of which normally closes the by-pass passage and comprises an area normally exposed to by-pass pressure, the head which normally closes the by-pass passage having a recess extending from its outer end to a point in its peripheral surface, said head also having a boss projecting from its end, the boss having a surface which normally engages the end wall of the bore and is thereby protected from by-pass pressure, and a spring urging the valve in the direction of said latter head, the outer end surface of the other head normally being exposed to inlet pressure, the parts being so designed and arranged that the algebraic sum of the effective pressures acting upon normally exposed surfaces of the heads is slightly less and opposite to the force exerted by the spring, whereby the valve is normally nearly balanced but held in by-pass-closing position, slight movement of the valve away from by-pass-closing position in response to abnormally high by-pass pressure, removing the boss from the end wall of the bore, thereby exposing an additional area of said head to fluid pressure and unbalancing the valve, whereby it moves quickly to the other end of its path of movement, in which position the valve head closes the outer portion of the inlet duct while the lateral end of the recess in the valve head registers with the inner end of the inlet duct.

14. A fuel pump comprising a pumping chamber, an inlet duct and an outlet duct, and a by-pass passage leading from the outlet duct to the inlet duct, and a nearly balanced pressure-actuated valve movable in a valve chamber and normally closing said passage, said valve and chamber being arranged so that said valve has surfaces normally subject respectively to the inlet pressure and the outlet pressure, and also an additional surface area normally contacting a cooperating surface of the chamber whereby said area is normally protected from the outlet pressure, a change in the differential between said pressures being sufficient to cause a slight movement of the valve toward its open position and the uncovering of the additional area and its exposure to outlet pressure, whereby the valve is suddenly moved to its fully opened position.

15. A fuel pump of the vibratory type comprising a casing having therein a cylinder and a reciprocatory piston, the casing having an inlet duct leading to the cylinder, an outlet duct leading therefrom, and a by-pass passage leading around the cylinder from the outlet duct to the inlet duct, the casing having a cylindrical bore closed at one end and diametrically intersecting the outlet duct, and a piston valve sliding in said bore, said valve including a by-pass-closing head, an actuating head, and means uniting said heads, the inner ends of the heads being of substantially equal effective areas and exposed to the fluid pressure subsisting in the outlet duct, and means for conducting pressure fluid from the outlet duct to act upon a part at least of the area of the outer end of the actuating head, the outer surface of the other head being normally exposed to inlet pressure, the normally exposed areas of the outer surfaces of the two heads being so proportioned that at normal outlet pressure the valve is substantially balanced but, when exposed to abnormally high outlet pressure, moves toward by-pass-opening position.

16. A fuel pump of the vibratory type comprising a casing having therein a cylinder and a reciprocatory piston, the casing having an inlet duct leading to the cylinder and an outlet duct leading therefrom and a by-pass passage leading around the cylinder from the outlet duct to the inlet duct, and a pressure-actuated, passage-closing valve at one end of said by-pass passage, means normally holding said valve in by-pass-closing position, the valve comprising a part which is normally protected from the discharge pressure but which is exposed to discharge pressure by slight opening movement of the valve, thereby suddenly to complete the opening movement, the valve also having a part which is always exposed to discharge pressure and which is so proportioned that the valve responds to abnormally high discharge pressure thereby to initiate opening of the valve.

FRANK E. TWISS.