Feb. 14, 1967 J. A. KLOESEL, JR., ET AL 3,303,900

BORE CONTROL DEVICE

Filed May 25, 1964 2 Sheets-Sheet 1

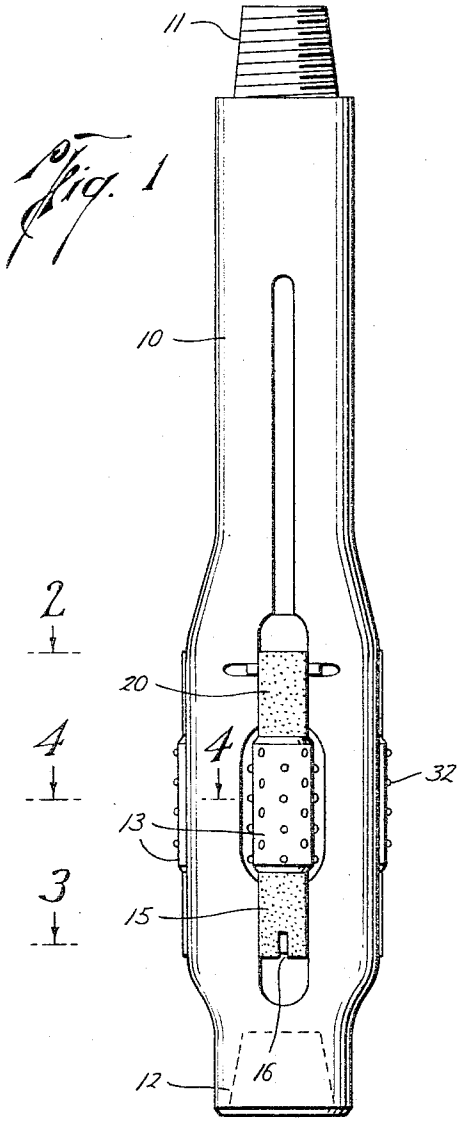

Fig. 1

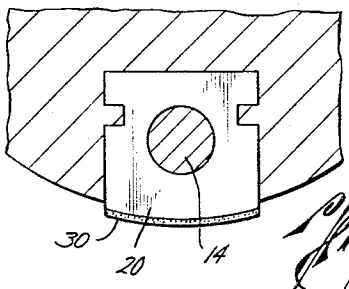

Fig. 2

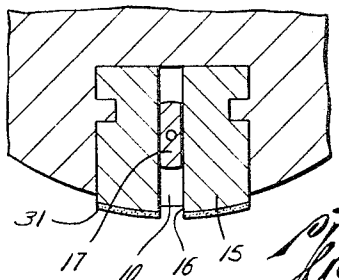

Fig. 3

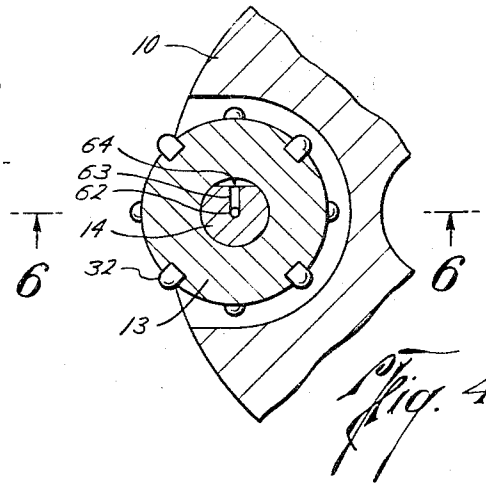

Fig. 4

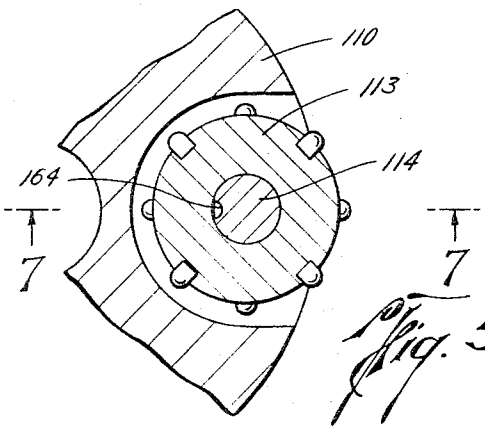

Fig. 5

Joseph A. Kloesel, Jr.
James W. Dixon
INVENTORS

BY Murray Robinson

ATTORNEY

Feb. 14, 1967 J. A. KLOESEL, JR., ETAL 3,303,900

BORE CONTROL DEVICE

Filed May 25, 1964 2 Sheets-Sheet 2

Fig. 6

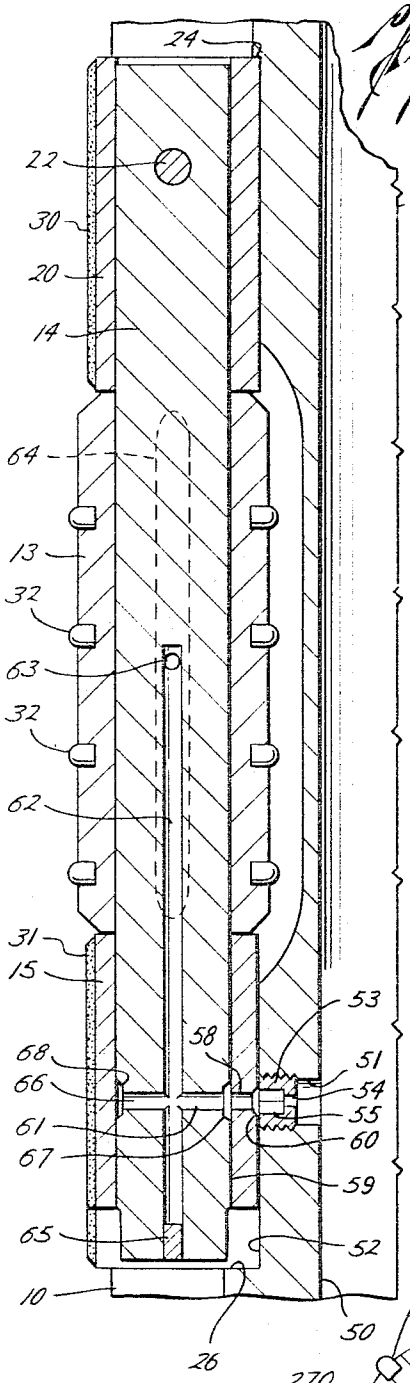

Fig. 7

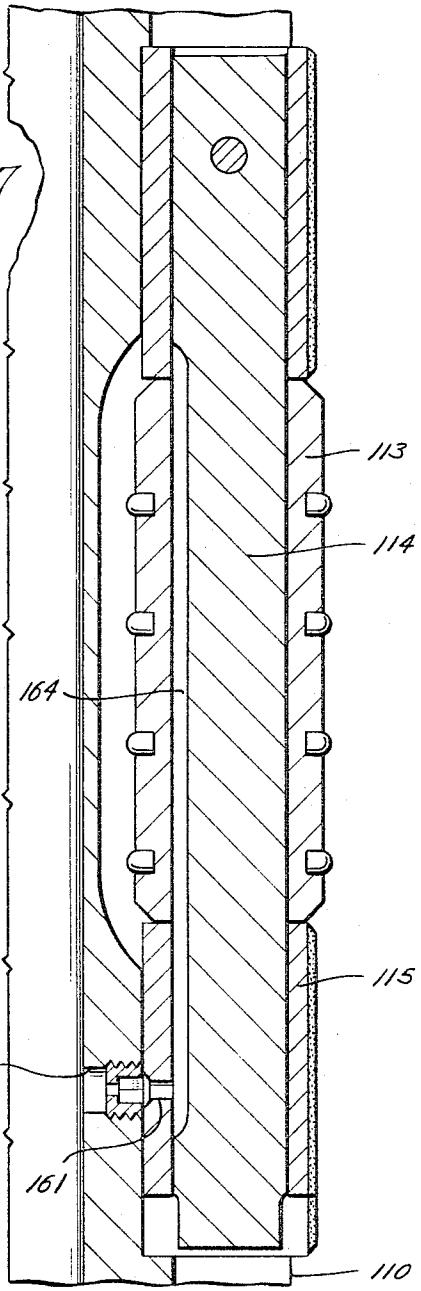

Fig. 8

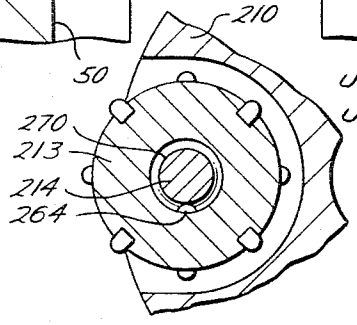

Joseph A. Kloesel, Jr.
James W. Dixon
INVENTORS

BY Murray Robinson
ATTORNEY

United States Patent Office 3,303,900 Patented Feb. 14, 1967

3,303,900
BORE CONTROL DEVICE

Joseph A. Kloesel, Jr., Midland, Tex., and James W. Dixon, Laurel, Miss., assignors to Drilco Oil Tools, Inc., Midland, Tex., a corporation of Texas

Filed May 25, 1964, Ser. No. 369,801
12 Claims. (Cl. 175—339)

This invention pertains to a bore control device used in earth boring apparatus of the rotary type. More specifically it pertains to such a device constituting a combination reamer-stabilizer useful in air drilling, especially in mining, wherein a plurality of cutter-centralizer rollers are rotatably mounted around the outer periphery of a tubular body adapted for insertion in the air drill string. A generally similar bore control device, but omitting the air venting system of the invention hereinafter described, is shown in the January 1963 issue of Mining Engineer wherein there is an advertisement for the Drilco "Knobby" reamer.

The objects of the invention are to keep grit out of the space between each roller and the shaft on which it is rotatably mounted, thereby to reduce wear and to prevent the roller from binding on the shaft, it being important that the roller turn during use, and to cool the roller and shaft so as to prevent softening thereof due to overheating.

According to the invention air passage means is provided to bleed a portion of the pressurized air from the drill string and deliver it to the space between each roller and the shaft on which it rotates. This air passage means preferably includes a transverse port in the tubular body of the bore control device adjacent a block mounted on the body in which block is disposed the lower end of the shaft on which the roller is mounted. An orifice plug of desired size is releasably secured in the body port. Communicating with the orifice in the plug are transverse passages through the block and shaft which in turn communicate with a longitudinal passage extending up the shaft to a point midway between the ends of the roller. The longitudinal passage in the shaft communicates at its upper end with a transverse passage extending to the outer periphery of the shaft at the side thereof. A flat area extends along the outer periphery of the shaft at the side thereof from the upper to the lower end of the roller providing a passage between shaft and roller communicating with the aforementioned transverse passage in the shaft that lies midway between the upper and lower ends of the shaft. Air is bled from the drill string through the orifice plug and continues through the air passage means just described into the annulus between roller and shaft and leaves at each end of the roller. The air flow leaving the annulus largely prevents the entrance of grit at the ends of the roller and carries away any grit that does find its way into the annulus, at the same time cooling the roller and shaft. This prolongs the life of the bore control device and reduces the frequency with which the rollers and shafts need be replaced.

Other objects and advantages of the invention will appear from the following description of a preferred embodiment and a modification thereof, reference being made to the accompanying drawings wherein

FIGURE 1 is an elevation showing a bore control device embodying the invention;

FIGURES 2 and 3 are fragmentary horizontal sections taken at planes 2—2 and 3—3 of FIGURE 1;

FIGURE 4 is a fragmentary horizontal section taken at planes 4—4 of FIGURE 1;

FIGURE 5 is a view similar to FIGURE 4 showing a modification;

FIGURE 6 is a fragmentary vertical section taken at plane 6—6 of FIGURE 4;

FIGURE 7 is a fragmentary vertical section taken at plane 7—7 of FIGURE 5, and

FIGURE 8 is a view similar to FIGURES 4 and 5 showing another modification.

Referring now to FIGURE 1, the bore control device there shown comprises a tubular body **10** having a threaded pin **11** at its upper end and a threaded box **12** at its lower end, whereby the device can be connected in a drill string. The body **10** is recessed to accommodate a plurality of rollers **13** each mounted to rotate on a shaft **14** (see FIGURES 4 and 6). The lower end of each shaft **14** is mounted in an apertured block **15**. As best shown in FIGURES 3 and 6, the block is dovetailed into the body **10** and has a slot **16** in its lower end to receive the flattened end or tang **17** of the shaft **14**, thereby preventing the shaft from turning. The upper end of each shaft is mounted on an apertured block **20**. As best shown in FIGURE 2, block **20** is dovetailed into body **10**. Referring to FIGURE 6, a pin **22** is driven through block **20** and shaft **14** locking the shaft to the block. Shoulders **24**, **26** in body **10** bear against the upper end of block **20** and the lower end of block **15** respectively, thereby holding the blocks, shaft **14**, and roller **13** against axial motion, there being just enough clearance to allow roller **13** to rotate freely on shaft **14**.

In order to protect blocks **15** and **20** against wear, their outer faces are coated with hard facing **30**, **31**, e.g. tungsten carbide. In order to protect the roller against wear and to provide a certain amount of cutting or crushing action, the rollers **13** are each provided with a plurality of tungsten carbide or other hard metal inserts **32**.

By using blocks of different sizes and by using rollers of different sizes, or both, it is possible to adapt the bore control device for different size bores whereby the rollers will contact the sides of the bore made by the drill bit therebelow, thereby maintaining the bore more nearly full gage and maintaining the axis of the drill string and the drill bit concentric with the bore so as to make a straight bore.

Referring now more particularly to FIGURE 6, tubular body **10** of the control device has an axial passage **50** extending therethrough from the pin **11** at the top to the box **12** at the bottom. It is through passage **50** that air pressure is supplied from the part of the boring apparatus disposed at the top of the bore down to the rotary drill bit at the bottom of the bore. The air cools the bit and then flows back up the bore in the annulus between the drill string and sides of the bore, carrying the cuttings from the bottom of the bore to the top. According to the invention a portion of the air in passage **50** is bled off through air passage means and supplied to the annulus between each roller **13** and its shaft **14**. Such an air passage means is next to be described.

A transverse port **51** in body **10** extends from axial passage **50** to recess **52** in which block **15** is disposed. The radially outermost end of port **51** is threaded to receive screw plug **53**. Plug **53** has an orifice **54** therethrough. For convenience of assembly and disassembly the plug **53** is provided with a hexagonal socket **55** adapted to receive an Allen wrench.

Block **15** has a transverse passage **58** extending therethrough from an exterior point on its surface in communication with orifice **54** to the inner surface of the bore that forms aperture **59** in which shaft **14** is disposed. The terminus of passage **58** is enlarged at **60** adjacent plug **53**.

Shaft **14** is provided with a transverse passage **61** extending from the outer surface of shaft **14** adjacent passage **58** to the interior of shaft **14**. An axial longitudinal passage **62** extends up from the inner end of passage **61** to a point about even with the mid-level of roller **13** where it connects with the inner end of transverse passage **63** (see also FIGURE 4). Passage **63** extends from the in-

terior of shaft **14** to the exterior thereof where it communicates with passage **64**. Passage **64** is formed at the surface of the shaft by a longitudinally disposed flat bevel extending from adjacent the upper end of the roller to adjacent the lower end thereof.

The passage **64**, instead of being formed by a flat bevel could be formed by a convex or concave bevel or groove. Whether formed by a bevel or groove, concave, convex, or flat, the passage forms a relief in the otherwise generally cylindrical surface of the shaft. The passage **64** is formed at one side of shaft **14**, viewing the control device from the outside and considering the nearest part of the shaft to the viewer as the front thereof and considering the part farthest from the viewer as the back thereof. The side of the shaft is in the neutral plane with respect to bending moments imposed on the shaft by the roller when it contacts the sides of the bore in which the device is used. This location of the passage is desirable because if the passage is disposed at the back of the shaft the shaft is apt to crack, and if the passage is placed at the front of the shaft the bearing surface for the roller is reduced at the place of maximum pressure.

The passage **62** is conveniently formed by a bore extending in from one end of the shaft and closed at that end by means such as a welded plug **65**. The passage **61** is preferably duplicated by an opposite passage **66** extending from passage **62** to the exterior of shaft **14** in a direct line with passage **61**. With this added passage **66**, the shaft can be turned 180 degrees after it has become worn, thereby presenting as the front of the shaft what was formerly the lightly loaded back of the shaft. The radially outer ends of passages **61**, **66** are enlarged at **67**, **68** to insure full communication with passage **58** when in registry therewith.

It is apparent that the passage means could be redisposed so that the port **51** would be above roller **13** instead of below and the passages **58**, **61** be located in the upper block and upper end of the shaft. However, the disposition shown is preferred since the air after leaving orifice **54** reduces in velocity and any entrained dust will tend to drop out as the air flows up in passage **62**. This is similar to the principle of the system of air purification disclosed in Patent Number 2,920,872 to George Bauer assigned to Hughes Tool Company relating to elimination of water from an air water mixture before supplying the air to a drill bit. In the present case by cleaning the air in this manner before supplying it to the space between shaft **14** and roller **13**, wear is reduced.

Since different pressures of air may be used in boring different sizes and depths holes, it is an advantageous feature of the invention that the orifice **54** can be easily changed to any desired size (or completely blocked off) by substituting different orifice plugs **53**.

In use, the air from the drill string, after passing through orifice **54** and the rest of the passage means, including that provided by flat bevel **64**, spreads out in the annulus provided by the clearance between the roller and shaft and flows up and down to emerge at the ends of the roller, carrying away with it any grit which may have found its way into the annulus and to a large extent preventing the entrance of such grit into the annulus. The air also cools the roller and shaft. In this latter regard it is to be noted that if the roller and shaft are not cooled they get so hot that they turn blue, indicating the temperature has exceeded 600 to 800 degrees F. and that the steel forming the roller and shaft has been softened, thereby making the roller and shaft less able to resist wear.

It is apparent that instead of putting the flat bevel **64** on the shaft **14**, a longitudinal passage could be provided on the inner surface of roller **13**, with a circular groove on the inner surface of the roller maintaining the longitudinal passage in constant communication with the transverse passage **63** of the shaft. However, the disposition of passages shown with the flat bevel on the shaft is preferred, for the roller is subjected to cyclically reversing stresses at it rotates. It would weaken the roller if it were provided with a groove on its inner surface, and tend to produce early failure. Also, any passage in the roller would necessarily be a groove, concentrating stress, whereas the passage on the shaft can be a bevel, flat or even convex in cross-section, although it too can be a concave bevel or groove if desired.

The air ventilation of the roller-shaft annulus is especially important where the roller is provided with tungsten carbide pellets as shown. These pellets not only protect the roller against wear but do a certain amount of reaming producing added detritus which would tend to lodge in the roller-shaft annulus were it not for the air ventilation system.

FIGURES 5 and 7 show a modified form of the invention wherein the component parts of the passage means supplying the air to the roller-shaft annulus are slightly different. Parts of the bore control device shown in FIGURES 5 and 7 that are the same or similar to those of the first described embodiment are given the same number plus 100 and need not be redescribed in detail. The essential difference is that the flat bevel **64** at the side of the shaft **14** is replaced by a groove **164** at the back of shaft **114**. Groove **164** extends down the shaft **114** below roller **113** to communicate directly with the transverse passage **161** in the block **115**.

FIGURE 8 shows a further modification of the invention wherein the component parts of the passage means supplying the air to the roller-shaft annulus differ slightly from those in the previously described embodiments. Parts of the bore control device shown in FIGURE 8 that are the same or similar to those of the first described embodiment are given the same number plus 200 and need not be redescribed in detail. The essential difference is that the flat bevel **64** at the side of the shaft is replaced by a groove **264** at the side of the shaft. Longitudinal groove **264** communicates at its lower end with an annular groove **270** around the outer periphery of shaft **214**. Annular groove **270** is in communication with the transverse passage in the block at the lower end of shaft **214**, said transverse passage being the same as passage **61** in FIGURE 6 (and passage **161** in FIGURE 7). Groove **264** is the same as groove **164** of FIGURE 7 except that it is at the side of the shaft rather than the back. With the FIGURE 8 arrangement, when shaft **214** becomes worn on its front side, it can be turned 180 degrees and replaced still leaving groove **264** in communication with the transverse passage **61**, the same as in the FIGURE 4 embodiment. Also, as in the FIGURE 4 embodiment, the groove **264** is in the desirable position at the side of the shaft, rather than at the front or back thereof.

It is of course possible to use a wide variety of air passage means to accomplish the ventilation of the roller-annulus space. However, although many forms of liquid and grease passage means for lubrication of rollers and shafts are known in a variety of equipment, see for example those shown in U.S. Patent 3,026,693 to J. T. Benz on a Kelly Bushing and the patents cited against same, the throttled air ventilation passage means of the roller-shaft annulus of a bore control device as shown herein is not to be confused therewith. Air is an elastic material as distinct from liquids and grease.

While preferred embodiments of the invention and various modifications thereof have been disclosed, many other modifications thereof can be made by one skilled in the art without departing from the spirit of the invention.

That being claimed is:

1. A bore control device adapted for use in an earth boring tubular drill string wherein compressed air flows down the drill string toward a drill bit at the lower end thereof and flows back up the annulus between the string and earth bore carrying away the cuttings, comprising

a tubular body having means at its ends adapted for connection to other members of a drill string,

a shaft mounted on the exterior of the body,

a roller mounted on the shaft with clearance therebetween to permit the roller to rotate freely on the shaft, said roller being adapted to contact the sides of an earth bore, and

air passage means connecting the interior of the tubular body with the space formed by the clearance between the roller and shaft, said air passage means terminating in a passage at the surface of the shaft extending from adjacent one end of the roller to adjacent the other end thereof, said terminal passage being formed by a substantially flat bevel on the shaft extending in a straight line along the length thereof.

2. Combination of claim 1 wherein the tubular body is adapted for connection to other members of a drill string, as aforesaid, by means of a threaded pin at one end thereof which thus constitutes the upper end of the device and by means of a threaded box at the other end thereof which thus constitutes the lower end thereof, and said air passage means includes a longitudinal passage in the shaft in communication with said clearance space between shaft and roller and extending down from levels adjacent the roller to a level below the roller where it is in communication with the interior of the tubular body.

3. Combination of claim 1 wherein said passage means includes a transverse passage in said shaft extending from said bevel to the interior of the shaft, a longitudinal passage in the interior of the shaft extending from said transverse passage beyond one end of the roller, a second transverse passage in said shaft connecting to said interior longitudinal passage where it extends beyond the end of the roller, a port in said body, said second transverse passage being in communication with said port.

4. Combination of claim 3 wherein said bevel is disposed at one side of the shaft at a radial distance from the axis of the tubular body midway between the minimum and maximum distances from the body axis to roller periphery.

5. Combination of claim 4 wherein said passage means includes a transverse passage in said shaft extending from said bevel to the interior of the shaft, a longitudinal passage in the interior of the shaft extending from said transverse passage beyond one end of the roller, a pair of axially aligned transverse passages in said shaft connecting to said interior longitudinal passage where it extends beyond the end of the roller, said pair of passages each extending to the outer periphery of the shaft, a port in said body and releasable means holding said shaft with a selected one of said pair of passages in communication with said port.

6. A bore control device adapted for use in an earth boring tubular drill string wherein compressed air flows down the drill string toward a drill bit at the lower end thereof and flows back up the annulus between the string and earth bore carrying away the cuttings, comprising

a tubular body having means at its ends adapted for connection to other members of a drill string,

a shaft mounted on the exterior of the body,

a roller mounted on the shaft with clearance therebetween to permit the roller to rotate freely on the shaft, said roller being adapted to contact the sides of an earth bore, and

air passage means connecting the interior of the tubular body with the space formed by the clearance between the roller and shaft, said air passage means terminating in a passage at the surface of the shaft extending from adjacent one end of the roller to adjacent the other end thereof, said terminal passage being formed by a relief in the surface of the shaft, and said passage means including an annular groove around the outer periphery of the shaft near one end thereof in communication with said terminal passage and a port in said body in communication with said annular groove.

7. Combination according to claim 6 with releasable means holding said shaft selectively in one of either of the two positions wherein said groove forming the terminal passage is at a radial distance from the axis of the tubular body midway between the minimum and maximum distances from the body axis to the roller periphery.

8. A bore control device adapted for use in an earth boring tubular drill string wherein compressed air flows down the drill string toward a drill bit at the lower end thereof and flows back up the annulus between the string and earth bore carrying away the cuttings, comprising

a tubular body having means at its ends adapted for connection to other members of a drill string,

a shaft mounted on the exterior of the body,

a roller mounted on the shaft with clearance therebetween to permit the roller to rotate freely on the shaft, said roller being adapted to contact the sides of an earth bore, and

air passage means connecting the interior of the tubular body with the space formed by the clearance between the roller and shaft, said air passage means terminating in a passage at the surface of the shaft extending from adjacent one end of the roller to adjacent the other end thereof, said terminal passage being formed by a relief in the surface of the shaft at the side thereof nearest the body axis and extending along the shaft beyond an end of the roller, said passage means further including a port in the tubular body in communication with said terminal passage where it extends beyond the end of the roller.

9. Combination of claim 8 wherein the tubular body is adapted for connection to other members of a drill string, as aforesaid, by means of a threaded pin at one end thereof which thus constitutes the upper end of the device and by means of a threaded box at the other end thereof which thus constitutes the lower end thereof, the end of the roller beyond which said relief in the shaft extends is the lower end of the roller, said relief extending down from levels adjacent the roller to a level below the roller where it is in communication with the interior of the tubular body through said port, said port being below the lower end of the roller.

10. A bore control device adapted for use in an earth boring tubular drill string wherein compressed air flows down the drill string toward a drill bit at the lower end thereof and flows back up the annulus between the string and earth bore carrying away the cuttings, comprising

a tubular body having means at its ends adapted for connection to other members of a drill string, said connection means comprising a threaded pin at one end of the body which thus constitutes the upper end of the device and by means of a threaded box at the other end of the body which thus constitutes the lower end of the device,

a vertical shaft mounted on the exterior of the body above said box and below said pin, said shaft having a generally cylindrical outer periphery,

a tubular roller having a generally cylindrical inner periphery mounted on the shaft with clearance between the outer periphery of the shaft and the inner periphery of the roller to permit the roller to rotate freely on the shaft, said roller having a plurality of sockets in its outer periphery and being provided with tungsten carbide inserts in said sockets extending outwardly beyond said outer periphery adapted to contact the sides of an earth bore, and

air passage means connecting the interior of the tubular body with the space formed by the clearance between the roller and shaft, air flowing from the interior of the tubular body clearing said clearance space of detritus formed by said inserts contacting the sides of the earth bore which detritus tends to fall into said clearance space, said air passage means terminating in a passage at the surface of the shaft extending from adjacent one end of the roller to adjacent the other end

thereof, said terminal passage being formed by a relief of the surface of the shaft at the outer periphery thereof leaving said inner periphery of the roller intact to provide full support for said inserts.

11. Combination of claim **10** wherein said air passage means includes a port in said body below said roller having flow restricting orifice means therein and flow passage means in communication with said port extending into said shaft at the lower port thereof below said roller and extending upwardly in said shaft into communication with said terminal passage, whereby air leaving said orifice means slows down and drops heavy particles therefrom before entering said clearance space between said roller and shaft.

12. A bore control device adapted for use in an earth boring tubular drill string wherein compressed air flows down the drill string toward a drill bit at the lower end thereof and flows back up the annulus between the string and earth bore carrying away the cuttings, comprising

a tubular body having means at its ends adapted for connection to other members of a drill string,

a shaft mounted on the exterior of the body,

a roller mounted on the shaft with clearance therebetween to permit the roller to rotate freely on the shaft, said roller being adapted to contact the sides of an earth bore, and

air passage means connecting the interior of the tubular body with the space formed by the clearance between the roller and shaft, said air passage means terminating in a passage at the surface of the shaft extending from adjacent one end of the roller to adjacent the other end thereof, said terminal passage being disposed longitudinally along the surface of the shaft at one side thereof at a radial distance from the axis of the tubular body midway between the minimum and maximum distances from the body axis to the roller periphery.

References Cited by the Examiner

UNITED STATES PATENTS

1,607,937	11/1926	Aldrin	175—347
2,056,498	10/1936	Wright	175—347
2,094,855	10/1937	Smith	175—339 X
2,713,913	7/1955	Ragan	175—410 X
2,861,780	11/1958	Butler	175—337 X

CHARLES E. O'CONNELL, *Primary Examiner.*

N. C. BYERS, *Assistant Examiner.*