# D. C. O'Connor,

## Trunk Stay.

No. 100,060. Patented Feb. 22. 1870.

Fig: 1.

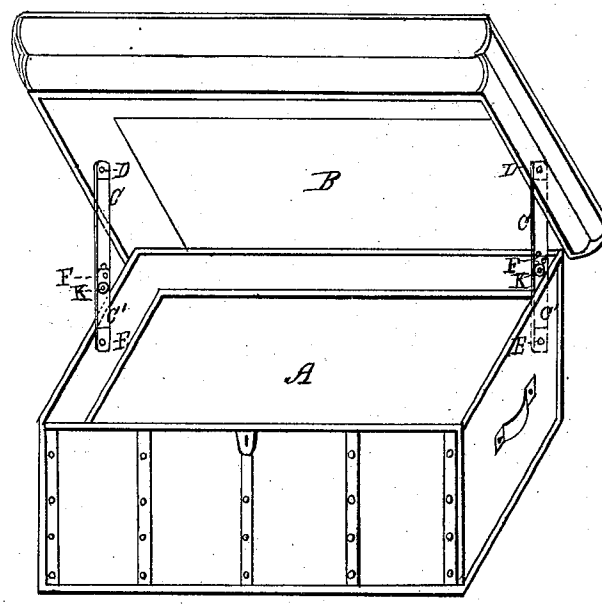

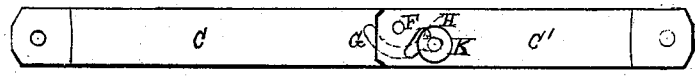


Fig. 2.

Fig: 3.

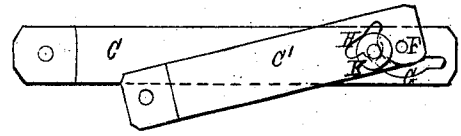


Fig: 4.

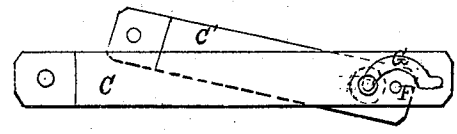


Witnesses.

Arthur Neice

E. Molly

Inventor.

Daniel C. O'Connor.

N. PETERS, PHOTO-LITHOGRAPHER, WASHINGTON, D. C.

# United States Patent Office.

DANIEL C. O'CONNOR, OF NEW YORK, N. Y.

*Letters Patent No.* 100,060, *dated February* 22, 1870.

## IMPROVED STAY FOR TRUNK LIDS.

The Schedule referred to in these Letters Patent and making part of the same

*To all whom it may concern:*

Be it known that I, DANIEL C. O'CONNOR, of the city, county, and State of New York, have invented certain Improvements in Safety Stays for Trunk Lids, of which the following is a specification.

The nature of my invention consists in the construction and arrangement of two oblong metallic slats, whose extreme ends are attached respectively to the body and lid of the trunk, while their inner ends are united by a stationary rivet, in such manner as to form a hinge-joint for folding itself within the trunk when the lid is closed; and also in a traveling rivet, which falls into slots in the metallic slats when the lid is raised, whereby they are enabled to assume the form of a straight rigid bar or stay holding the lid open without danger of falling (with its metallic edge) on the hands or head of a person engaged in removing from or placing articles in the trunk, until the traveling rivets are pushed out of place by hand, as I will further explain by reference to the accompanying drawings, of which—

Figure 1 is a perspective view of a trunk with my invention applied to it.

Figure 2, a view of the lid-stay removed from the trunk, showing slots and traveling rivets.

Figure 3, a view of lid-stay in a folded state.

Figure 4, a view of reverse side of same.

In the said drawings—

A indicates the body of the trunk, and

B, the lid.

C C′ are the oblong metallic slats, one of which, C, is attached to the lid at D, while the other, C′, is attached to the body of the trunk at E.

These slats are united at their inner ends by a rivet, F, forming a hinge joint for the purpose of self-folding within the trunk when the lid is closed, said slats being also provided with curved slots G H, for reception of the traveling rivet K, which falls by its own gravity down into the lower end of the slots G H when the lid is raised from the body of the trunk, counteracting the hinge-joint, and enabling the slots C C′ to assume a rigid stay for holding the lid open until the traveling nut K is (by hand) raised out of its place, when the stay will fold on itself as the lid is closed on the body of the trunk.

This device is intended as a substitute for the web connection between the body and lid of a trunk as at present used, for preventing the lid from falling entirely backward, but which does not prevent the lid closing on the hands and head of a person while engaged in removing or placing articles in the trunk.

I claim—

The slats C C′, provided with curved slots G H, rivet F, and traveling rivet K, arranged and operating substantially as and for the purposes described and set forth.

In testimony whereof, I have hereunto set my signature this 9th day of December, A. D. 1869.

DANIEL C. O'CONNOR.

Witnesses:

ARTHUR NEILL,

E. MOLTZ.