March 7, 1967 J. M. COCITO 3,307,817

VACUUM BOARD VALVES

Filed March 19, 1965 2 Sheets-Sheet 1

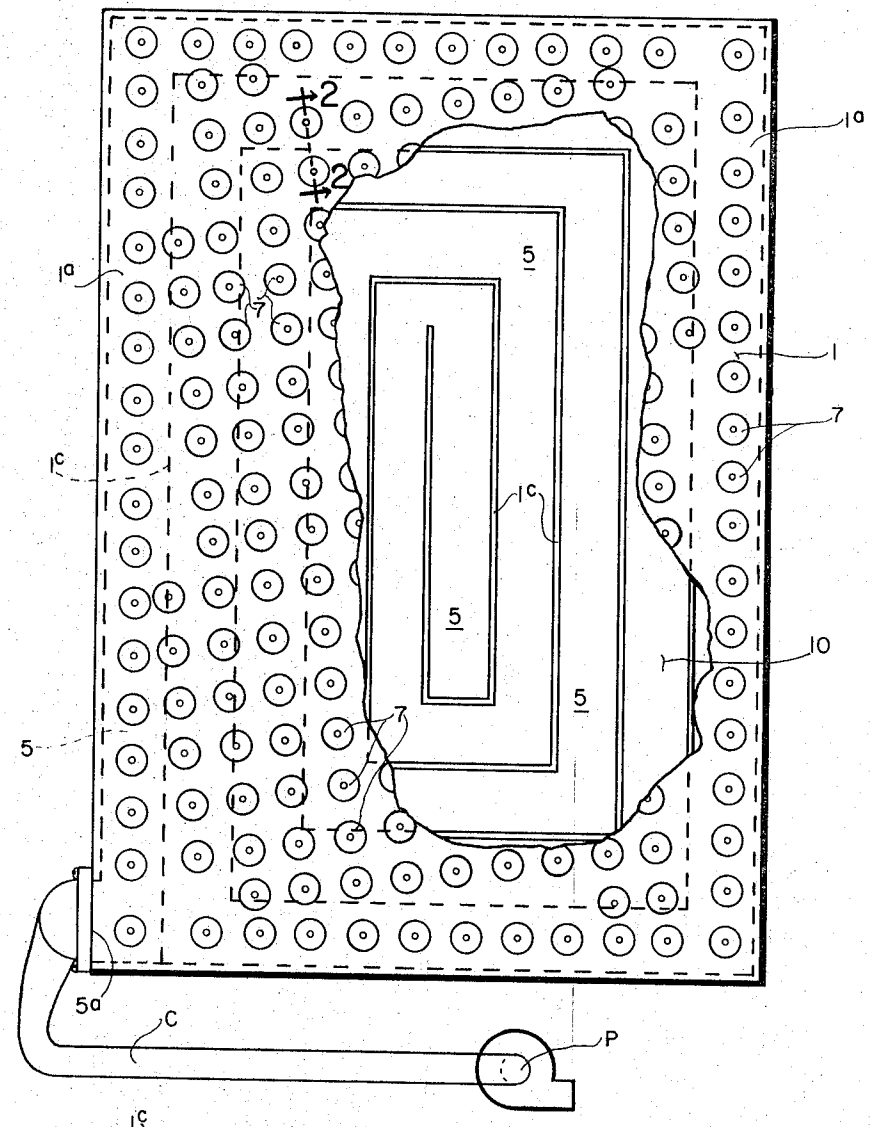

Fig. 1

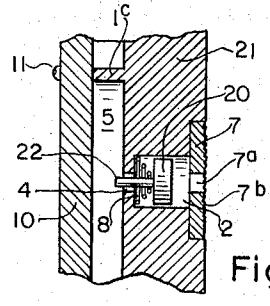

Fig. 9

INVENTOR
JOE MICHAEL COCITO

BY Alexander & Dowell
ATTORNEYS

March 7, 1967 J. M. COCITO 3,307,817

VACUUM BOARD VALVES

Filed March 19, 1965 2 Sheets-Sheet 2

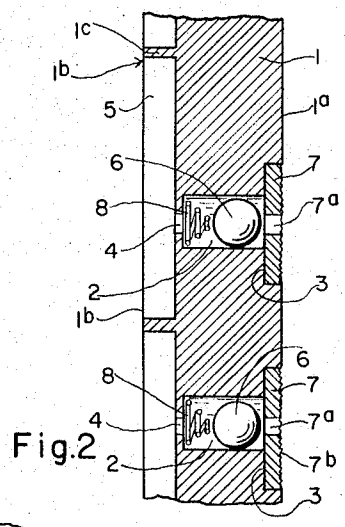

Fig.2

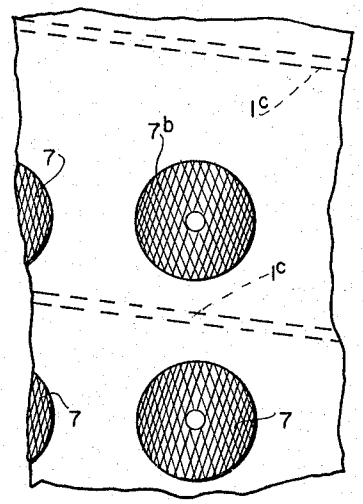

Fig. 3

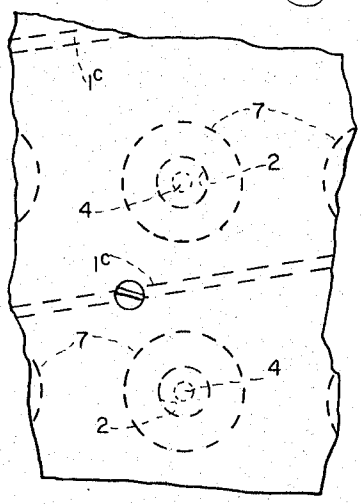

Fig. 5

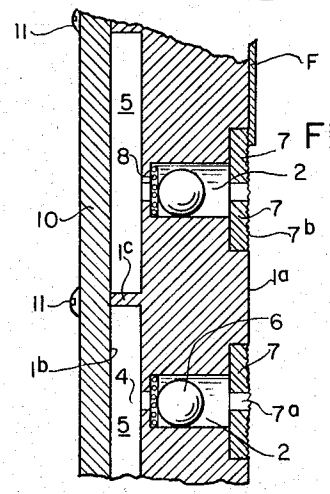

Fig. 4

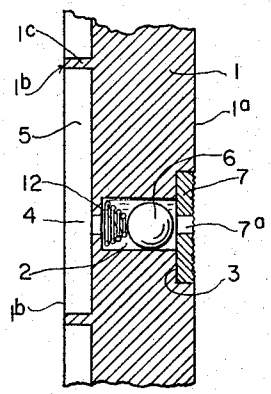

Fig.6

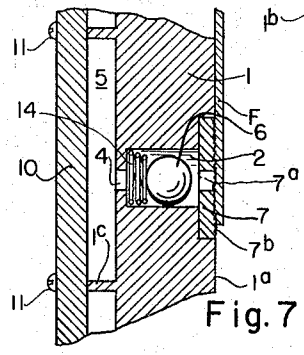

Fig. 7

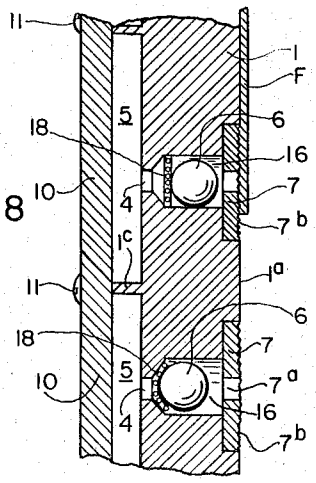

Fig.8

INVENTOR

JOE MICHAEL COCITO

BY Alexander & Dowell

ATTORNEYS

United States Patent Office 3,307,817 Patented Mar. 7, 1967

3,307,817

VACUUM BOARD VALVES

Joe Michael Cocito, 11008 Nicholas Drive, Wheaton, Md. 20902

Filed Mar. 19, 1965, Ser. No. 441,206
20 Claims. (Cl. 248—362)

This invention relates to vacuum holders for thin flexible photographic sheets or films, and more particularly relates to improvements in holders having a large number of suction points distributed over the surface of a supporting plate and communicating with vacuum manifold means.

It is a principal object of this invention to provide a holder of the above type in which novel and improved automatic valve means are provided at each suction point to virtually close the bore extending from the front face of the plate into the vacuum manifold whenever no film overlies and closes the bore, and said valve means automatically opening when a film is laid thereover. I am aware that there are a number of prior-art patents showing structures which operate in this same general way, for instance Patents 2,910,265, 2,753,181, 2,782,574, 2,694,-337, 2,425,921 and 2,198,765, but the present valve structure is an improvement from the point of view of being self-cleaning to a greater extent. One of the most serious problems encountered in connection with the valved vacuum-board structures results from their tendency to collect dust in the bores of the suction holes with the result that the valves become jammed or the bores clogged, or both. The present structure employs coil spring means which function as the operative valving elements when compressed against a shoulder in the bore by piston means which may take the form of a ball sized to be a loose sliding-fit in the bore. When the vacuum pulls the ball against the spring to confine it against the shoulder, the space between convolutions of the spring provides the desired valving action, without however, completely closing the bore to the flow of air. This leaking tendency assures that when the outer end of the bore is closed by a film laid thereover, the air between the ball and the film will leak into the manifold by passing between the spring convolutions and thus releaese the air pressure holding the ball against the spring, thereby opening the valve. On the other hand, when the valve opens, the space between spring convolutions increases greatly or changes shape, and thus tends to free any collected dust or lint to pass through the bore and be collected in the manifold. The spring element itself can be either cylindrical or conical, and in the latter case, the coils can be shaped and proportioned so that they can either all intermesh to lie in one plane, or else they can be made so that they must always retain a cylindrical or conical shape.

The present disclosure shows the improved valve means coupled with an advantageous manifold structure behind the pattern of suction points and communicating with the bores therethrough. Various attempts have been made in the past to improve the efficiency of the manifold means, for instance by dividing it into separate compartments and employing either manually or automatically operated valves to close or open the partitions between the various manifold compartments. Typical internal partitioning of manifolds according to the prior art is shown in Patents 2,317,348, 2,814,233, 2,895,706, and 2,914,289. The present structure, however, uses one continuous manifold including a single lengthy channel which is folded in a serpentine manner and communicates with all of the suction points sequentially. A vacuum can be drawn upon the channel at either its outer end, or else at an inner end located near the center of the vacuum holder assembly. One of the characterizing

features of this manifold structure is that there is no place in the manifold system where two legs thereof are connected in parallel with each other. Moreover, the cross-sectional area thereof at any particualr location is small as compared with the cross-sectional area of many prior art structures. Thus, when the system is first turned on, the evacuating effort will be applied initially to a relatively few valve assemblies near the beginning of the serpentine channel, and when these valve assemblies have closed, the vacuum gradient will move along the channel causing each valve assembly which it approaches to close in a sequential manner. Therefore, the vacuum pump need not be capable of closing substantially all of the ball valves simultaneously, but rather the pump need be capable only of closing a few of the valve assemblies at a time.

Another object of this invention is to provide a relatively simple and easily machined structure which can be economically manufactured using inexpensive materials. One improvement in the present structure is to provide special washer means for holding the piston balls in the bores, the washers being pressed into a recess at a film supporting end of each of the bores. These washers are knurled on their outer surfaces so that when a film is laid over the washer, the vacuum from the central hole therethrough can spread outwardly through the grooves provided in the front face of the washers by the surface knurling, but these grooves are so small and shallow as compared with the diameter of the hole through the washer that in the event that the film overlies only a portion of the washer including the hole therethrough, the holding effect of the vacuum upon the film will not be lost by escape through the knurled areas of the washers which are not covered by the film.

Another advantage of the present invention is that virtually all of the necessary machining can be performed upon both sides of one main panel member, the other panel member requiring no machining except a few holes drilled therein to facilitate screwing of the rear closure panel to the front panel to complete the enclosure of manifold channels.

Still another object of the invention is to arrange the vacuum holes in a pattern of rectangular coordinates which are skewed or tilted with respect to the edges of the vacuum board so that when a sheet or film is laid against the front of the board with its edges disposed parallel to the edges of the board, there can be no location in which a peripheral edge of the sheet will lie entirely along a space between rows of holes and therefore not be held against curling, as might occur on a board where the holes are arranged in rows which are parallel to the edges of the board, assuming that the latter are vertical and horizontal respectively.

Other objects and advantages of the present invention will become apparent during the following discussion of the drawings, wherein:

FIG. 1 is an elevation view of a vacuum film holder according to the present invention connected with an external vacuum pump, a portion of the front panel of the holder being broken away to show interior construction;

FIG. 2 is an enlarged sectional view taken along line 2—2 of FIG. 1, this figure omitting the rear closure panel, and showing the ball valves in open position;

FIG. 3 is a front view of the fragmentary structure shown in FIG. 2;

FIG. 4 is a sectional view similar to FIG. 2, but showing the rear closure panel mounted in place and a vacuum drawn upon the valve structures, which are illustrated in closed positions;

FIG. 5 is a rear view of the fragmentary structure shown in FIG. 4;

FIG. 6 is a section view corresponding with FIG. 2 but showing a first modified form of spring structures;

FIG. 7 is a view corresponding with FIG. 4 but showing a second modified form of spring structures;

FIG. 8 is a view corresponding with FIG. 4 but showing a third modified form of spring structure and bore shape; and

FIG. 9 is a view corresponding with FIG. 4 but showing a cylindrical piston instead of a ball-shaped piston.

Referring now to the drawings, the figures show preferred embodiments of the invention which include two panel members. The front panel member **1** has a large number of holes arranged in a novel pattern and passing all the way through it. Each of the holes comprises a main bore **2** having an enlarged outer portion **3** and a small inner portion **4**, these bore portions extending from the front surface **1***a* of the panel **1** through the rear surface **1***b* thereof. The rear surface has a series of serpentine channels **5** therein which are separated by ribs **1***c* and which form a continuous passage commencing in the center of FIG. 1 and winding around the figure and eventually opening into an evacuation outlet **5***a* which connects to a suitable vacuum pump P through a suitable conduit C. The rear surfaces of the ribs **1***c* mate with a rear closure panel member **10** which can best be seen in FIGS. 1, 4, 7, and 8. The rear closure panel member **10** lies against the ribs **1***c* between the channels **5**, and the front and rear panels are held together by any suitable means such as screws **11** as shown in FIG. 4. If it were not for the suction holes **7***a* the pump P could easily draw a vacuum upon the channels **5** to the extent of its evacuating capability. However, the holes through the front panel member **1** leak air into the channels **5** when they are not covered with film F, and therefore valve means are provided in the bores which function in the manner to be hereinafter more fully explained.

The manner in which the present board is intended to operate is basically similar to the functioning of numerous other vacuum holders such as the ones illustrated in the patents mentioned above in which valve means are provided to automatically close any of the bores which have not been covered by film sheets F or other relatively non-porous webs overlying the front face **1***a* of the panel **1**. Each valve assembly by which the closing of the uncovered bores is accomplished includes some kind of vacuum-operated piston means, such as a ball **6**, located in each of the major bores **2** and fitting it fairly snuggly. The ball **6** is kept in the bore **2** by a retainer washer **7** having a hole **7***a* therethrough and having a knurled front face **7***b*. Each washer **7** is a press fit in the bore portion **3** and serves to retain the ball **6** so that it cannot fall out of the front of the board. The rear bore portion **4** is of much smaller diameter than the central bore portion **2** so as to form a shoulder against which a small coil spring **8** rests. In the embodiment shown in FIGS. 2, 3, 4, and 5, the coil spring **8** has several convolutions tapering toward an apex in the direction of the ball **6**, and the spring **8** occupies the position shown in FIG. 2 whenever the ball **6** is out of contact therewith.

On the other hand, when a vacuum is drawn upon the bore **2** through the manifold **5** and the bore portion **4**, the ball **6** serves as a piston which moves to the left and thereby compresses the spring **8** until it lies flat against the shoulder at the inner end of the bore **2**, as shown in FIG. 4. The compressed position is referred to as the closed position of the valve assembly, which is shown in open position in FIG. 2. Actually, the bore which the ball controls is never completely closed as will be hereinafter explained.

Referring again to the structure shown in FIG. 1, the suction holes comprising the bores **2**, **3**, and **4** are arranged in a pattern which covers most of the front face **1***a* of the panel **1**, and the pattern includes an outer peripheral series which lies substantially parallel to the edges of the panels **1** and **10**. The pattern further includes interior series of bores which, however, lie upon an imaginary rectangular grid of mutually perpendicular coordinates, which latter grid is skewed with respect to the edges of the panel in order that when a film F is layed over the face **1***a* of the panel **1** with its edges disposed parallel to the edges of the panel **1**, the outer edges of the film F will always overlie at least some of the bores, for the reason that the edges of the film F will not lie parallel to the skewed rows of bore holes. In other words, if the bore holes were arranged in the usual pattern of rows parallel to the edges of the film holder front panel, when a film was placed over part of the front panel with its edges parallel to the edges thereof one or more film edges could fall between rows of suction holes, thereby leaving the entire edge of the film unsupported. The skewing of the coordinate grid upon which most of the bore holes lie assures that the edge of the film will overlie at least some of these bore holes.

FIG. 6 shows a modified form of the invention in which the structure is the same as that shown in FIG. 2 except that the helical spring **8** has been replaced by a different helical spring **12** having more convolutions so that the spring **12** never crushes flat as shown in FIG. 4. In FIG. 6, the spring **12** crushes merely to a tighter frustoconical shape when the ball **6** is pulled leftwardly thereagainst under the influence of a leftwardly travelling air stream. The small leakage between convolutions of the spring **12** provides the same bleeding action as the leakage between convolutions of the spring **8** in FIG. 4, described above.

FIG. 7 shows a second modified form of the invention in which the illustrated structure resembles that shown in FIG. 4, except that a cylindrical helical coil spring **14** replaces the conical spring **8**. When the ball **6** crushes the spring **14** leftwardly, the convolutions come together to provide a closing effect but still allowing a small bleeding action between convolutions.

In FIG. 4 the film F does not cover the hole **7***a* and therefore the valve **6** is in closed position; however, in FIG. 7 the film F does cover the hole in the washer **7**, and therefore the ball **6** is in open position.

FIG. 8 shows a third modified form of the invention in which the main bores **16** have conical inner-end shoulders and in which the coil spring **18** is normally a flat spiral as shown in the upper bore which is blocked by the film F. The lower spring **18** is, however, compressed by the ball **6** so that it is confined between the ball and the conical shoulder to partially close the bore **4** and provide a limited closure capable of some leaking action.

FIG. 9 shows a structure of the type shown in FIG. 4 with respect to the panel member and spring structure, but modified as to the piston means. The piston **20** shown in FIG. 9 is cylindrical in shape and is a few thousandths of an inch smaller in diameter than the bore **2** in which it is a sliding fit. The piston **20** has a small stem portion **22** which extends into the bore **4** and maintains the piston straight within the bore **2** so that an axially short piston **20** can be used in the bore without likelihood of cocking therein. This structure makes it posible to use a thinner sheet material when making the front panel member **21**. The other parts are the same as those illustrated in FIGS. 2 and 4.

Operation

The reasons for the various novel structures of the present disclosure will become apparent during the following explanation of operation. As is recognized in the prior art, if unlimited vacuum pump facilities are available, it is not necessary to close the exposed bore holes through the front panel member in locations not overlapped by the film, but since it is desirable to use only a relatively small vacuum pump P in a practical installation, the closure valves shown in the bores become necessary in order to conserve the vacuum, especially when

only a small proportition of the bores through the front panel member are covered by a film F.

By inspection of FIGS. 1, 2, and 4, it will be seen that the vacuum manifolds comprise serpentine channels which are relatively small in cross-sectional areas. In practical working embodiments of the present invention, the channels **5** are milled into or built up upon one of the panel members only to a depth of about ⅛ inch, and the width of each channel is about five inches. Since the channels are of relatively small cross-sectional area, they exhibit considerable impedance of the flow of air therethrough with the result that when the vacuum pump P is first started, the end of the channel nearest the conduit C drops in pressure considerably ahead of the time that the pressure begins dropping in the more remotely located channel portions. Thus, even a small pump P, such as a domestic vacuum cleaner, can sequentially close the valves located along the channel without having to immediately evacuate the entire manifold to do so. Hence, when the pump P is started, the valves close first in the outer channels, and then successively close in a sequence winding around the panels and approaching the center of the panel members.

Referring now to FIGS. 2 through 9, these fingers, and especially FIGS. 2 and 4, illustrates a novel valve structure having very practical features. Experience has shown that the presence of dust in most valve structures is highly damaging to their operation, and eventually renders the device inoperative. The principal advantage of the present structure is that the valve is self-cleaning since the convolutions of the coil spring itself form the valve element. In order to fully understood this action, it is desirable to assign dimensions to the structure shown in FIGS. 2 and 4. Assume that the bore **4** is drilled by a number 30 twist drill and is therefore about .128 inch in diameter. Further assume that the central bore **2** is a little more than 3/16 in diameter, for example, .189 inch, the size of a number 12 drill. The ball **6** is 3/16 in diameter or .187 inch, and the hole **7***a* in the washer **7** is the same diameter as the bore **4**. The spring wire is about 6 thousandths in diameter and is wound so that when this spring is compressed against the shoulder as shown in FIG. 4, there will be about 4 thousandths of an inch between convolutions. As long as the ball **6** and the spring **8** are in open position, the bores **4** and **7***a* and the clearance passed the ball determine how much air can pass through the bore hole from outside the front panel member **1** into the channel **5**. However, when the valve assembly is in closed position as shown in FIG. 4, the spring **8** is confined against the shoulder by the ball **6** which merely acts as a piston within the bore **2**. Hence, the air which seeks to pass leftwardly through the portion **4** is further restricted by the convolutions of the spring **8** since the escaping air must travel through a spiral path between the convolutions of the flattened spring. When the spring is squashed flat as shown in FIG. 4, assuming the dimension shown above, the spiral convolutions will only be about 4 thousandths of an inch apart. If some dust should get into this small clearance between spring convolutions while the valve is in closed position, the dust will be freed and permitted to pass outwardly through the bore **4** when the vacuum is released and the spring **8** pushes the ball **6** back into the position shown in FIG. 2. This structure therefore provides a small bleed hole between spring convolutions when the valve is in closed position, but a much larger hole when the valve is in open position. In the modified forms shown in FIGS. 6 and 7, the bleeding action results from the fact that the spring convolutions never precisely mate with each other to form a complete seal.

The outer surface **7***b* of each of the washers **7** is knurled so that minute grooves will be provided on the outer surface of each washer **7** permitting a vacuum to be drawn on the film F over as much of the surface area of the washer **7** as is covered thereby, and not merely over the relatively small area of the hole **7***a*. Some prior patents have shown other types of roughening of the outer surface in the vicinity of each suction hole, but many of these structures require expensive concentric-groove machining of the front plate itself. The present invention is believed to constitute an improvement by requiring only inexpensive knurling of the washers themselves before they are installed in the bores **3** of the front panels.

The present invention is not to be limited to the exact structure shown in the drawings, for obviously changes may be made therein within the scope of the following claims.

I claim:

1. A vacuum board for holding sheets of photographic apparatus, comprising:

(a) a panel member having plural suction holes therethrough, each including a larger bore extending inwardly from a front face of said member and changing at a shoulder to a smaller bore which extends through the rear of the member;

(b) vacuum manifold means on the rear of the panel member and communicating with said bores; and

(c) vacuum-operated valve means in each suction hole and comprising piston means slidable in said larger bore, and a coiled spring disposed axially in the larger bore between the piston means and the shoulder to be compressed by the former against the latter when the piston means is displaced theretoward by air pressure entering the larger bore from the front face, thereby providing spacing between spring convolutions and forming an imperfect seal.

2. In a vacuum board as set forth in claim **1**, said suction holes being arranged in a pattern of rows and columns respectively lying on coordinates which are skewed out of parallel relationship with respect to the sides of the panel member.

3. In a vacuum board as set forth in claim **1**, said larger bore having a further enlargement where it meets the front face of the panel member, and retainer means secured in said enlargement of the bore and having a bore therethrough to admit air into the bore.

4. In a vacuum board as set forth in claim **3**, said retainer means comprising a washer having a roughened outer surface disposed flush with said front face.

5. In a vacuum board as set forth in claim **1**, said coiled spring comprising a conical helix with its larger end against the shoulder and wound so that the convolutions can nest inside each other to permit the spring to be crushed substantially flat.

6. In a vacuum board as set forth in claim **1**, said coiled spring comprising a conical helix with its larger end against the shoulder and wound so that the convolutions interfere with each other when the spring is compressed to its shortest conical shape.

7. In a vacuum board as set forth in claim **1**, said coiled spring comprising a cylindrical helix wound with a space between convolutions which space shrinks as the spring is compressed.

8. In a vacuum board as set forth in claim **1**, said shoulder being conical and tapering from said larger bore to said smaller bore, and said coiled spring comprising a flat spiral abutting the larger end of the shoulder and having its inner convolutions displaceable by said piston means toward the smaller end of the shoulder.

9. In a vacuum board as set forth in claim **1**, said piston means comprising a sphere.

10. In a vacuum board as set forth in claim **1**, said piston means comprising a cylinder having an axial stem extending into said smaller bore.

11. In a vacuum board for holding flexible sheets in a plane, comprising:

(a) a panel member having plural suction holes therethrough, each including a bore extending from the front face comprising said plane through the panel member to the rear and having a shoulder therein;

(b) vacuum manifold means on the rear of the panel member and communicating with said bores; and

(c) vacuum-operated valve means in each suction hole and comprising piston means slidable in said bore between the front face and the shoulder, and a coiled spring disposed axially in the bore between the piston means and the shoulder and compressible by the former against the latter when the piston means is displaced theretoward by air pressure entering the bore from the front face the convolutions of the spring being formed to imperfectly seal with respect to each other when the spring is compressed.

12. In a vacuum board as set forth in claim **11**, said suction holes being arranged in a pattern of rows and columns respectively lying on coordinates which are skewed out of parallel relationship with respect to the sides of the panel member.

13. In a vacuum board as set forth in claim **11**, said bore having an enlargement where it meets the front face of the panel member, and retainer means secured in said enlargement of the bore and having a hole therethrough to admit air into the bore.

14. In a vacuum board as set forth in claim **13**, said retainer means comprising a washer having a knurled outer surface disposed flush with said front face.

15. In a vacuum board as set forth in claim **11**, said coiled spring comprising a conical helix with its larger end against the shoulder and wound so that the convolutions can nest inside each other to permit the spring to be crushed substantially flat.

16. In a vacuum board as set forth in claim **11**, said coiled spring comprising a conical helix with its larger end against the shoulder and wound so that the convolutions interfere with each other when the spring is compressed to its shortest conical shape.

17. In a vacuum board as set forth in claim **11**, said coiled spring comprising a cylindrical helix wound with a space between convolutions which space shrinks as the spring is compressed.

18. In a vacuum board as set forth in claim **11**, the end of the piston means facing the shoulder being convex, and the shoulder facing the piston means and having a concave surface, and said coiled spring comprising a flat spiral abutting the larger end of the shoulder and having its inner convolutions displaceable by the piston means toward said concave surface.

19. In a vacuum board as set forth in claim **11**, said piston means comprising a sphere.

20. In a vacuum board as set forth in claim **11**, said piston means comprising a cylinder having an axial stem extending into said smaller bore.

References Cited by the Examiner

UNITED STATES PATENTS

2,481,713	9/1949	Bertea	137—525 X
2,591,060	4/1952	Garretson	137—513.3
2,782,574	2/1957	Copold	269—21 X
2,910,265	10/1959	Anander	248—363
3,168,107	2/1965	Creuels	137—525
3,259,046	7/1966	Nishimura	88—24

CLAUDE A. LE ROY, *Primary Examiner.*

R. P. SEITTER, *Assistant Examiner.*