United States Patent

Karklys

[15] **3,662,186**

[45] **May 9, 1972**

[54] ELECTRONIC CONTROL CIRCUIT FOR APPLIANCES

[72] Inventor: **Joseph Karklys**, St. Joseph, Mich.

[73] Assignee: **Whirlpool Corporation**

[22] Filed: **June 27, 1969**

[21] Appl. No.: **837,163**

[52] **U.S. Cl.** .....**307/141,** 34/45, 259/1 R

[51] **Int. Cl.** **B01f 3/00,** B28c 7/00

[58] **Field of Search** .....307/141, 141.4, 293; 34/45; 137/287; 328/129, 48, 43; 259/1 R

[56] **References Cited**

UNITED STATES PATENTS

3,464,673	9/1969	Cargo et al.	259/1 R
3,539,153	11/1970	Wennerberg	307/141 X
3,477,258	11/1969	Walker et al.	307/141 X
3,383,525	5/1968	Arksey	328/129 X
3,376,546	4/1968	Gess et al.	328/48 X
3,251,030	5/1966	Bolton et al.	328/43 X
2,970,226	1/1961	Skelton et al.	307/293

Primary Examiner—Robert K. Schaefer
Assistant Examiner—William J. Smith
Attorney—James S. Nettleton, Thomas E. Turcotte, Gene A. Heth, Burton H. Baker, Donald W. Thomas, Frank C. Harter and Hofgren, Wegner, Allen, Stellman & McCord

[57] **ABSTRACT**

A control for a multiple function apparatus, such as an appliance, utilizing an electronic clock, or timer, electronic program circuitry and digital circuitry to select and control the functions to be performed. The electronic program circuitry has a plurality of bistable circuits, one portion controlling a series of steps repeated in each of several subcycles and the other portion controlling the sequence of subcycles. The second portion may be preset to establish a desired operating program. The digital circuitry is responsive to the condition of the bistable program circuits and to the clock to control the operation of the appliance.

36 Claims, 7 Drawing Figures

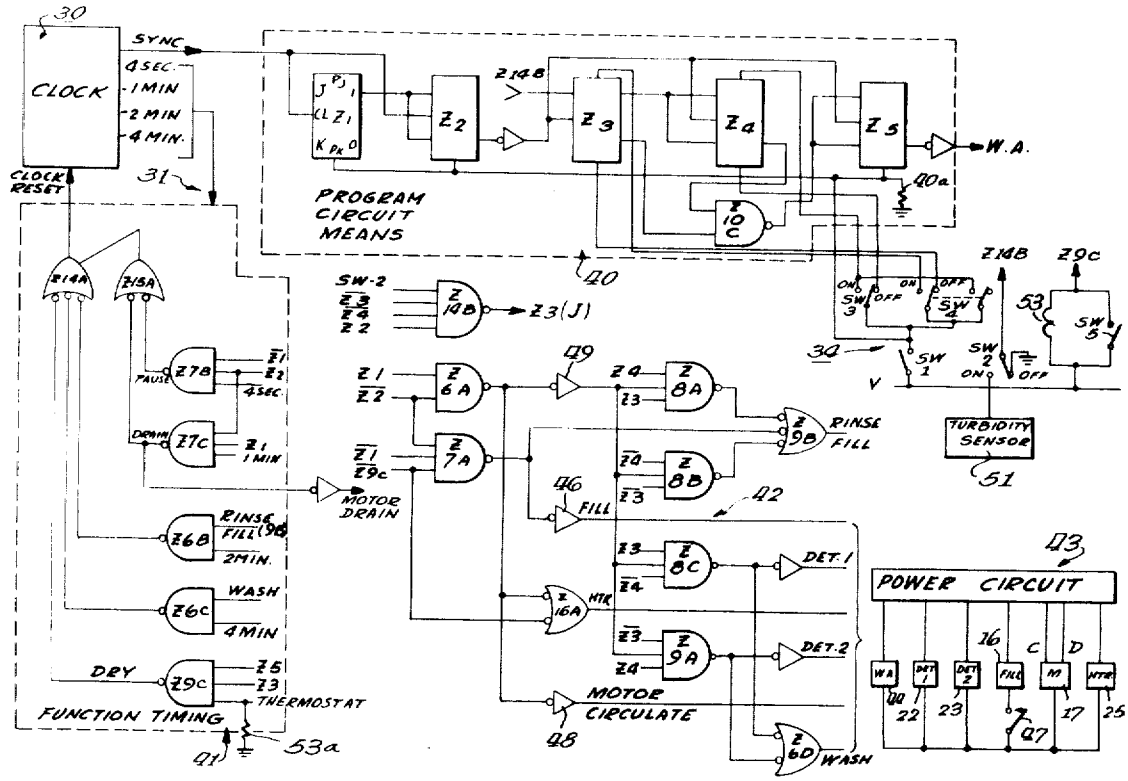

Fig. 1

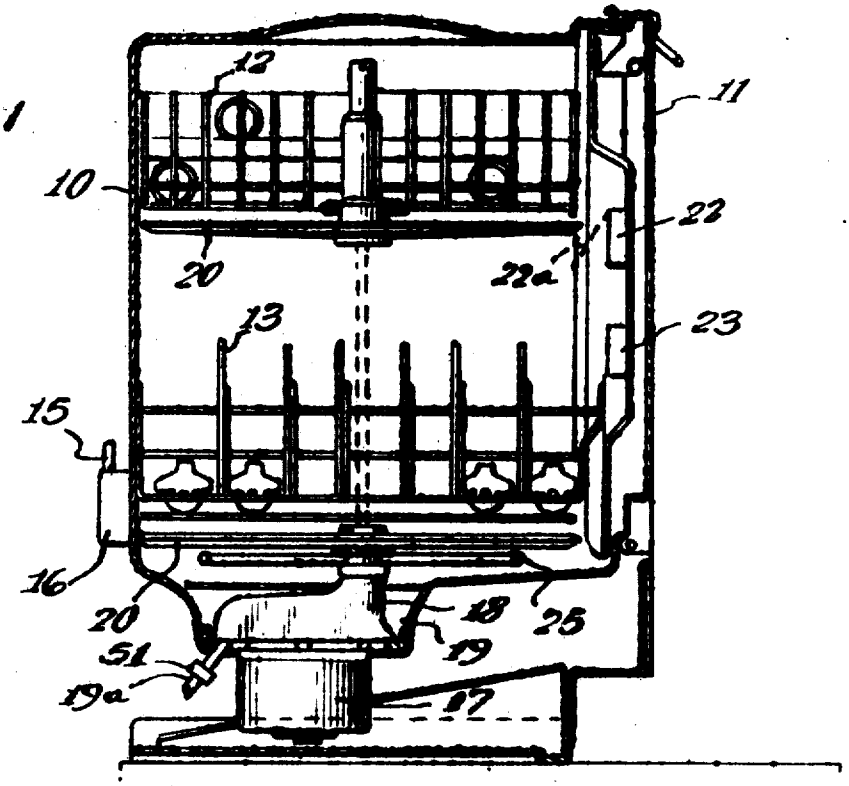

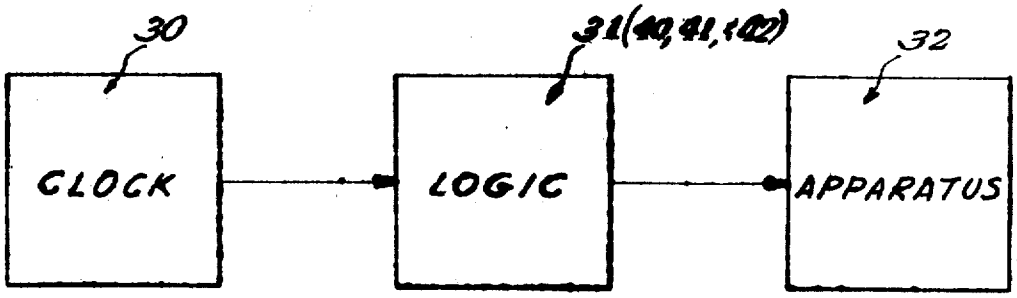

Fig. 2

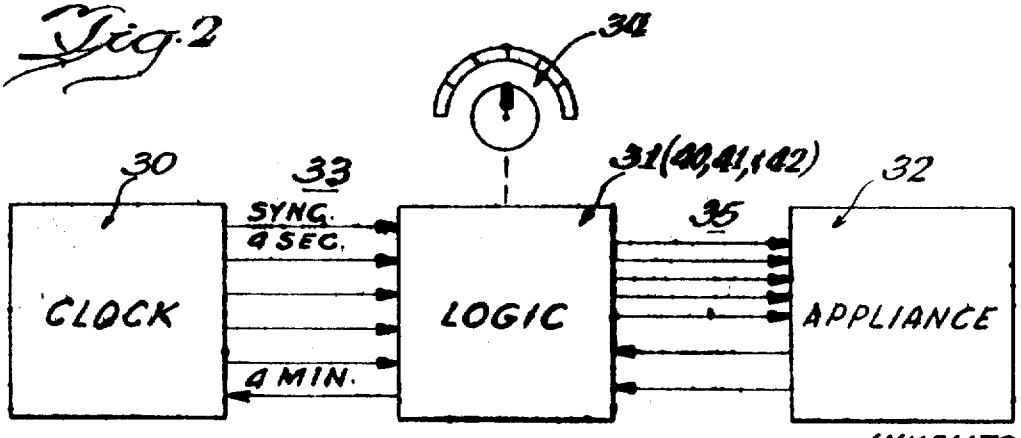

Fig. 3

INVENTOR
Joseph Karklys
BY Hofgren, Wegner, Allen, Stellman & Hall
ATTORNEYS

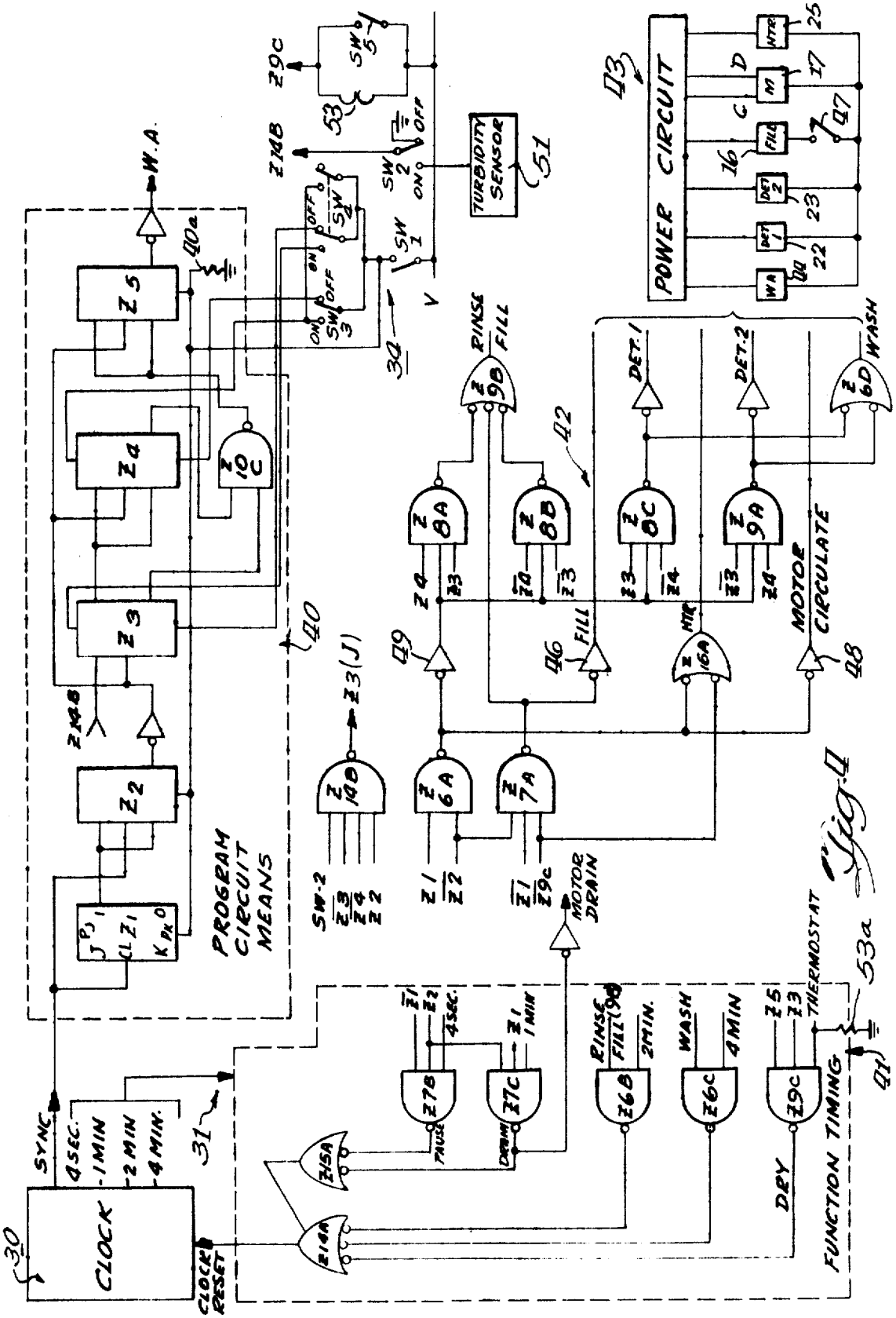
CLOCK
SYNC
4 SEC.
1 MIN
2 MIN
4 MIN.
CLOCK RESET
PROGRAM CIRCUIT MEANS
W.A.
TURBIDITY SENSOR
POWER CIRCUIT
RINSE FILL
DET.1
DET.2
WASH
MOTOR CIRCULATE
FILL
MOTOR DRAIN
THERMOSTAT
FUNCTION TIMING
DRY
PAUSE
DRAIN
RINSE FILL (9B)
2 MIN.
WASH
4 MIN
SW-2
Z3(J)
Z14B
Z9C
Z14A
Z15A
Z14B
Z14A
Z7B
Z7C
Z6B
Z6C
Z9C
Z6A
Z7A
Z8A
Z8B
Z8C
Z9A
Z9B
Z6D
Z10C
Z5
Z4
Z3
Z2
Z1
30
31
34
40
40a
41
42
43
46
47
48
49
51
53
53a
16
17
22
23
25

Fig. 4

Fig. 5

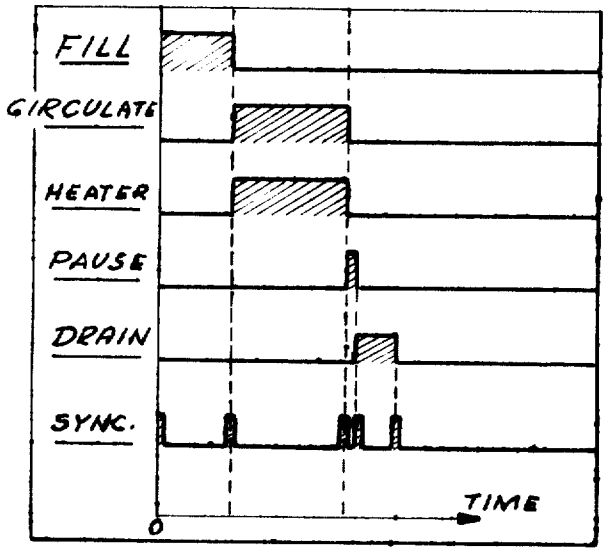
FILL
CIRCULATE
HEATER
PAUSE
DRAIN
SYNC.
TIME
0

Fig. 7

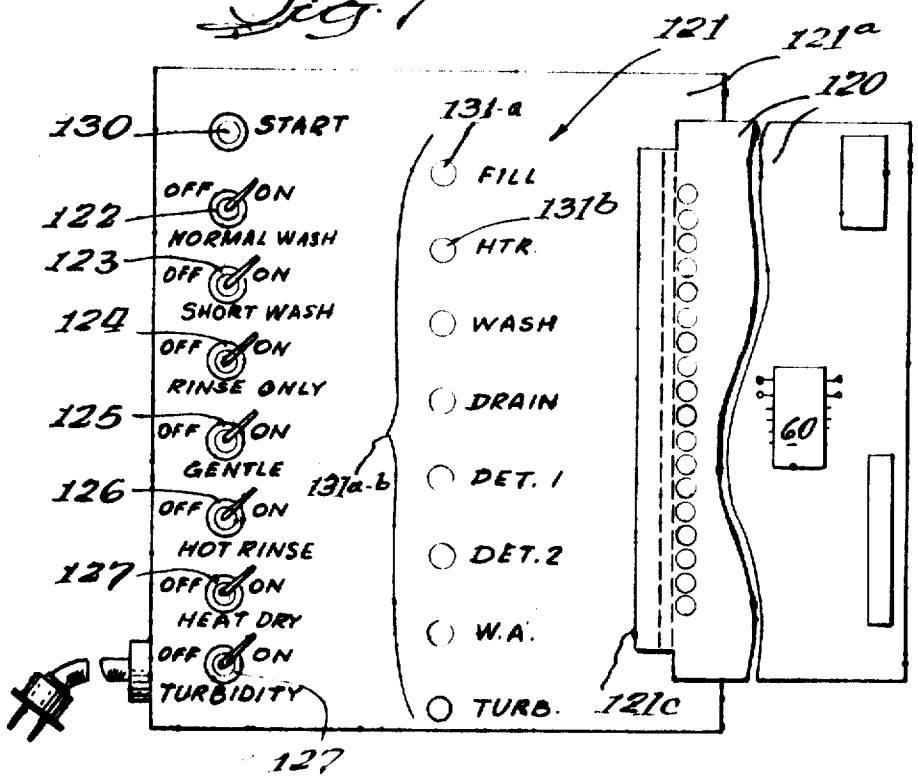
121
121a
120
130
START
131-a
FILL
131b
HTR.
122
OFF ON
NORMAL WASH
123
OFF ON
SHORT WASH
124
OFF ON
RINSE ONLY
125
OFF ON
GENTLE
126
OFF ON
HOT RINSE
127
OFF ON
HEAT DRY
OFF ON
TURBIDITY
131a-b
WASH
DRAIN
DET. 1
DET. 2
W.A.
TURB.
60
121c
127

Fig. 6

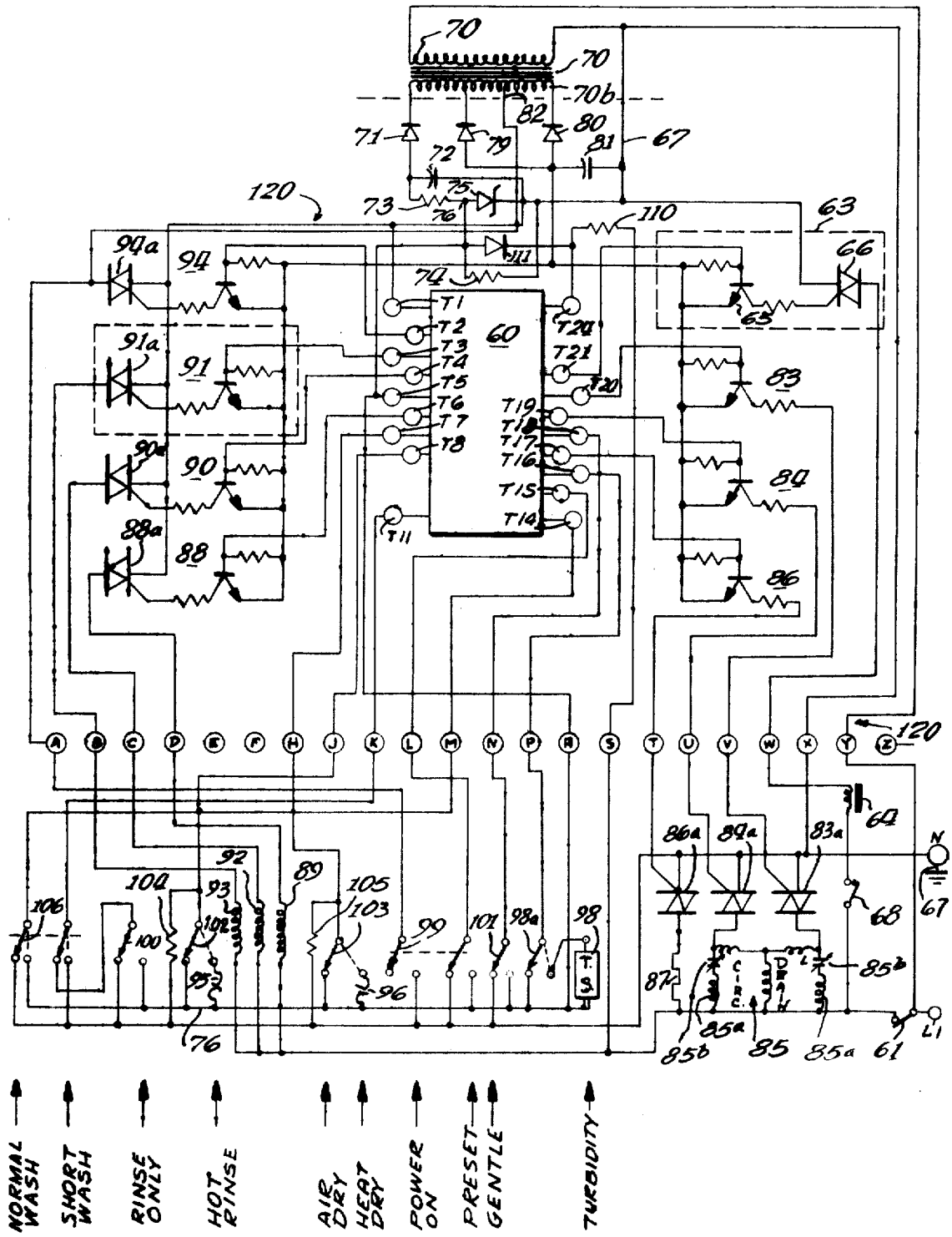
NORMAL WASH
SHORT WASH
RINSE ONLY
HOT RINSE
AIR DRY
HEAT DRY
POWER ON
PRESET GENTLE
TURBIDITY

ELECTRONIC CONTROL CIRCUIT FOR APPLIANCES

BACKGROUND OF THE INVENTION

1. Field of the Invention

This invention is concerned with electrical controls.

2. Description of the Prior Art

Multiple function home appliances, such as dishwashers, washing machines, clothes dryers, combination washer-dryers, and the like, are commonly controlled by a series of switches operated by a motor driven cam. In some cases, several different programs of operation are provided and each is on one sector of the cam. A mechanical stop mechanism provides for positioning the cam at the appropriate starting point for a desired cycle of operation. Such controls have been relatively expensive to manufacture, have rather critical mechanical tolerances, are often a source of service and maintenance problems, and are relatively limited as to the number of programs and cycles that may be selected by the user of the appliance.

SUMMARY OF THE INVENTION

The present invention is concerned with an electronic control utilizing digital techniques for performing the sequential and selective control functions in a multiple function home appliance or other similar apparatus to overcome the limitations of prior art appliance controls. Many components of the control of this invention may utilize solid state circuitry and may be fabricated with integrated circuit techniques as, for example, an integrated circuit utilizing metal oxide semiconductors.

This invention comprehends the provision of an electronic control which includes a source of timing signals for use in an apparatus such as an appliance, together with a program circuit means having a plurality of sequential stable states representing the functions of the apparatus. The control includes a means for sensing conditions in the apparatus, and a gate circuit means responsive to the program circuit means, the timing signals and the means for sensing apparatus conditions for generating signals to initiate and terminate the sequential functions of the apparatus. A means responsive to termination of each function actuates the program circuit means seriatim from one stable state to the next.

More particularly, the operating cycle for the apparatus may include subcycles each having one or more functions, the control including means establishing a sequence of subcycles, means responsive to timing signals and the subcycle sequence for establishing the length of each subcycle, and means responsive to the termination of a subcycle for selecting the next subcycle.

The means for establishing a sequence of subcycles in the illustrated control includes a plurality of interconnected bistable circuits, each having two operating states. Means connected with the bistable circuits and responsive to the condition thereof determine the subcycle to be performed. Further means are operative at the end of each subcycle, changing the setting of the bistable circuits to establish a desired sequence of subcycles.

The invention further comprehends such a control having means by which the bistable circuits may selectively be preset to establish the cycle of operations of the appliance.

Further the control may include means responsive to a condition of the appliance for repeating a subcycle under certain preselected conditions, as, for example, in repeating a rinsing operation when the rinse water is not sufficiently clean. The bistable circuits which establish the sequence of subcycles of the control may have one portion which controls a series of steps repeated in each of a plurality of subcycles and another portion which controls the sequence of subcycles. The first portion of the bistable circuits may operate in several of the subcycles and be reset at the end of each subcycle.

Another feature of the invention is the provision of control means enabling the user of the appliance to select from a much larger number of program and cycle options than is available employing prior art control means.

BRIEF DESCRIPTION OF THE DRAWING

Further features and advantages of the invention will readily be apparent from the following specification taken in connection with the drawing, in which:

FIG. 1 is a vertical section through an automatic dishwasher utilizing a control incorporating the invention;

FIG. 2 is a basic block diagram of an apparatus control incorporating the invention;

FIG. 3 is a further block diagram illustrating relationships between the elements of the diagram of FIG. 2;

FIG. 4 is a detailed block diagram illustrating the invention;

FIG. 5 is a timing diagram used in describing the operation of the control;

FIG. 6 is a schematic diagram of the circuitry of an appliance utilizing a control incorporating the invention; and

FIG. 7 is a front view of an apparatus for testing a control incorporating the invention.

DESCRIPTION OF THE PREFERRED EMBODIMENT

The invention is illustrated and described herein as embodied in an appliance control, and more specifically, as a control for a dishwasher. The dishwasher shown has an operating cycle including prerinse, first and second washes, first and second post-wash rinses and dry subcycles. As will be obvious to those skilled in the art, the invention is also applicable to dishwashers having less sophisticated operating cycles and to other apparatus, such as home appliances, having multiple functions. For example, the invention may readily be utilized in the control of an automatic washing machine, a clothes dryer, or a combination washer-dryer.

Turning now to FIG. 1, the dishwasher appliance shown therein has a housing **10** with an access opening closed by a door **11**. Certain portions of the control incorporating the invention may advantageously be mounted in an upper portion of the door **11**. Racks **12** and **13** hold the dishes and utensils to be washed.

Water is introduced from a suitable source through conduit **15** and water control valve **16** into the washer housing **10** which provides a receptacle therefor. During the rinse and wash subcycles, a motor **17**, mounted below housing **10**, operates a pump **18** to circulate the water from sump **19** through spray arms **20**. During the drain step at the end of each rinse and wash subcycle, motor **17** may be operated, for example, in the reverse direction, to drive a drain impeller, not shown, to pump the water out through a drain line **19*a***.

Mounted on the inside of door **11** are a pair of dispensers **22** and **23** having covers, as **22*a***, released or opened at appropriate times in the operating cycle to release a detergent powder or washing agent to aid in the washing operation. An electric heating element **25** keeps the water hot during rinse and wash subcycles and provides heat for the dry subcycle.

Further details of the physical construction of the dishwasher need not be discussed here for an understanding of the control and its operation. Suitable apparatus may be found in U.S. Pat. Nos. 3,180,348 and 3,262,604, for example.

Turning now to FIGS. **2** and **3**, the control utilizes a clock, or timer, **30** which operates together with a logic circuit **31** to actuate the functional elements of the apparatus **32** in the desired sequence. The timer **30** may have plural output signals in increments suitable for the operating cycle of the apparatus ranging in FIG. **3** from 4 seconds to 4 minutes. The logic network **31** (discussed below) includes program circuit means which establish the sequence of apparatus functions and gate circuit means which correlate each step of the operating cycle with the appropriate time period to control the operation of the appliance. Suitable time increments may be utilized as indicated by the arrows **33** between the timer and logic network. The operation of the appliance may be modified manually as by presetting the program circuit means of logic network **31** through a manual control input device indicated at **34**. The output of logic network **31** controls the various functions of appliance **32** as indicated by arrows **35** (FIG. **3**). In turn, conditions of the appliance modify or control the logic network to

achieve the desired operation. Thus, the built-in program of the logic network may be modified or supplemented manually in accordance with the wishes of the operator, and automatically depending on the conditions encountered during an operating cycle.

In FIG. 4, an illustrative embodiment of a logic circuit is shown in detail and its interconnections with the clock **30** and with the appliance **32** are indicated. The logic circuit illustrated is made up of several different types of elements. These are a J-K flip-flop, shown as a rectangle; a "NAND" gate, illustrated as a half oval with a circle at the output; and "OR" gate shown as a convex half oval; and an inverter, shown as a triangle with a circle at the input. Each active element is designated by the letter Z with a number and, in some cases, a letter suffix.

The clock **30**, not shown in detail in FIG. 4, may be of any suitable type which has outputs including synchronizing or timing pulses, and further pulses indicating desired discrete timing intervals, here shown as ranging from four seconds to four minutes. A suitable clock circuit has a series of frequency dividers operating from the 60 H_z line frequency. In my copending application, Ser. No. 837,179 filed June 27, 1969, and assigned to the assignee of this application, there is shown in detail an electronic clock or timer including a plurality of flip-flop stages for generating timing signals which may be utilized in the control of this invention. This clock or timer has the capability of generating high accuracy clock timing periods without any adverse temperature variation effects such as are inherent with known RC timing circuits wherein exposure of the components to varying ambient temperature conditions will, of necessity, introduce errors in the generated timing periods. Thus, the clock or timer utilized in the control of the present invention has the ability to operate over a relatively wide temperature range such as may be found in a dishwasher or clothes dryer, for example, while providing the desired accuracy of the timing periods.

The clock or timer utilized in the control of the present invention provides desired timing periods of great accuracy in multiples of 8.3 milliseconds, based on 60 H_z line frequency power supply to the control.

The control circuitry or logic indicated by block **31** in FIGS. **2** and **3** has several portions shown separately in FIG. **4**. A first portion **40** is a program circuit means or sequence control for establishing the sequence of steps in the operating cycle of the appliance. A second portion **41** includes function timing gate circuits responsive to the particular step of the cycle which is being performed and to a timing signal from the clock to establish the length of each step. The switches SW1 through SW5 which make up the manual control **34** provide for modifying the sequence of steps in the operating cycle. The remainder of the gate circuits **42** of FIG. **4** respond to the condition of the program circuit means **40**, determining the particular operation to be performed and actuating the appropriate power circuitry **43**. Many of the interconnections between elements are indicated by input and output designations rather than with interconnecting lines, in accordance with common practice.

Program circuit means **40** comprises a memory including five bistable circuits Z1 through Z5, each of which is preferably a J-K flip-flop circuit with input and output terminals and signals as indicated on the block of Z1. The J, K input signals received by program circuit means **40** are gated by synchronizing pulses applied to the clock input CL. Additional inputs P_J and P_K do not require synchronization. The outputs 1, 0 provided by Z1 represent conditions indicated elsewhere in the diagram as Z1, $\overline{Z1}$, respectively. When the flip-flop is reset, Z1 is 0 and $\overline{Z1}$ is 1; when it is set, Z1 is 1 and $\overline{Z1}$ is 0. The other bistable circuits have corresponding outputs. A resistor **40***a* is connected from ground to the P_K inputs of circuits Z1 through Z5 to supply logic 0 to these circuits.

In the dishwasher illustrated herein, the complete operating sequence includes the subcycles of prerinse, wash 1, wash 2, rinse 1, rinse 2, and dry. Each of the subcycles, except dry, includes the steps or functions of fill, circulate, pause and drain, during which the dishwasher chamber is filled with water, the water is circulated to perform the rinsing or washing operation for the articles such as plates and glassware being treated or washed in the dishwasher appliance, and the water is then drained. (In a washing machine, the term "agitate" is generally used rather than "circulate," with respect to the washing and rinsing subcycles. In a clothes dryer, the articles being treated in the dryer chamber may consist of articles of clothing, and the fluid for treating the articles usually comprises heated air for circulation or passage through the material undergoing the drying operation.) Flip-flops Z1, Z2 of the program circuit means **40** determine the repeated steps or functions while flip-flops Z3, Z4 and Z5 control the sequence of subcycles. The following tables relate the conditions of the flip-flops to the subcycles and steps being performed:

OPERATING CYCLE

Function	Z3	Z4	Z5
Prerinse	0	0	0
Wash 1	1	0	0
Wash 2	0	1	0
Rinse 1	1	1	0
Rinse 2	0	0	1
Dry	1	0	1

REPEATED SUBCYCLE

Function	Z1	Z2
Fill	0	0
Circulate	1	0
Pause	0	1
Drain	1	1

The power circuits **43** respond to control signals from the circuitry **42** to operate the various elements of the appliance. These include fill valve **16**, motor **17** (which is bidirectional, one direction being for circulation and the other for drain), heater **25** and dispensers **22**, **23** and **44** for the wash detergent and a water additive used in the final rinse. Power circuitry **43** may, for example, utilize solid state gated bidirectional, current conducting semiconductor switching devices, mechanical relays, or the like.

The operating sequence will now be considered in detail. It will be assumed that manual control switches SW2 through SW5 are in the positions shown in the drawing. The cycle of operation is initiated by closure of SW1, a momentary contact switch, which applies a reset voltage V of proper logic level to the P_K inputs of all flip-flops Z1–Z5. This sets all of the flip-flops to the 0 condition. As indicated in the tables above, a 0 condition for flip-flops Z3, Z4, Z5 identifies the prerinse subcycle, while a 0 condition for Z1, Z2 identifies the fill step. When the flip-flops Z1–Z5 are reset, a clock reset pulse is generated, initiating timing for the control.

The signals $\overline{Z1}$, $\overline{Z2}$ and $\overline{Z9c}$ (part of function timing **41**) actuate NAND gate Z7*a* providing a fill signal at the output and through the inverter **46** to power circuit **43**. This opens the fill valve **16** and allows water to enter the chamber of the dishwasher. If the level of water exceeds a predetermined point, water overfill limit switch **47** opens and the fill valve closes. The output from NAND gate Z7*a* also provides an input to OR gate Z9*b* and through it to NAND gate Z6B in the function timing portion of the control circuitry. The other input to Z6B is a two a signal, signal from clock **30**. At the end of the two minute period, an inverted output from NAND gate Z6B to OR gate Z14A produces a clock reset pulse which resets the clock to zero time. The clock also generates a signal identified as SYNC, which steps Z1 to the 1 condition. Z2 remains in the 0 position as there is a connection from the 1 out put of Z1 to both the J and K inputs thereof.

The second step of the repetitive subcycle, during which water is circulated through the washer, is initiated by the combination of Z1, $\overline{Z2}$. These inputs actuate NAND gate Z6A providing a signal through inverter 48 to operate the motor 17 circulating the water in the washer. A signal from NAND gate Z6A is also coupled through inverter 49 to NAND gate Z8B which is actuated by a combination of Z6A, $\overline{Z3}$, $\overline{Z4}$, and in turn actuates OR gate Z9B indicating the rinse step and providing an input to function timing NAND gate Z6B. The output of Z6A is connected with OR gate Z16A to actuate heater 25. When the two minute signal is received, the output of Z6B again resets the clock and provides a SYNC pulse to the program circuit means 40. The synchronizing pulse, with Z1 in the 1 condition, resets Z1 to 0 and sets Z2 to 1. This condition establishes the pause step of the repetitive subcycle. The pause permits motor 17 to stop before reversing for the drain step. The length of the pause is determined by NAND gate Z7B, having $\overline{Z1}$, Z2 and 4-second inputs. After the pause, the clock is again reset, producing a SYNC signal to Z1, Z2, switching both to the "set" or 1 position, the drain step of the subcycle. NAND gate Z7C, having inputs Z1, Z2 and 1 minute, establishes the length of the drain step. Motor 17 operates in the opposite direction from which it operated during circulation, pumping the water from the washer.

At the end of one minute, the clock is again reset and a SYNC pulse sent to the program circuit means 40. Both Z1 and Z2 are reset to the 0 condition and, if a 1 output is available from NAND gate Z14B (indicating that one or more of the inputs is 0), Z3 is actuated to the "set" or 1 condition. In the circuit illustrated in the drawing with turbidity switch SW2 in the off (0) position, NAND gate Z14B has a 0 input and, thus, has a 1 output. Accordingly, actuation of Z3 to 1 occurs.

FIG. 5 illustrates the time relation of the signals controlling the various functions of the repeated subcycle. At the start of the cycle of operation, a sync pulse occurs setting Z1 and the clock is reset to zero. The condition for fill is established, as described above. After the appropriate time for the fill operation (here, 2 minutes), a sync pulse occurs, motor 17 is energized to circulate the water and heater 25 is energized. At the end of this function of the subcycle (which may be either a rinse or a wash), another sync pulse actuates flip-flops Z1, Z2 and the clock is again reset. A short pause (3 seconds) occurs followed by a sync pulse and operation of motor 17 to drain the water from the apparatus. The initiation of the drain function is coordinated by another sync pulse. At the end of the drain function, a sync pulse occurs, resetting Z1, Z2 to zero and providing a clock signal to Z3, Z4, Z5.

Turbidity sensor 51 is a device which senses the amount of foreign matter in the prerinse water. It may, for example, be a lamp and photocell (not shown) associated with the drain from the housing. With switch SW2 connected to the turbidity sensor, if there is an excessive amount of dirt in the water, all inputs to Z14B are 1 and the output is 0. Upon completion of the drain step, the prerinse subcycle is repeated as Z3, Z4 and Z5 remain in the 0 condition.

Assuming the prerinse subcycle is complete, reset of Z2 to 0, plus the 1 output from Z14B sets Z3. Reference to the operating cycle table above will show that this corresponds with the first wash subcycle of the operating sequence. As both Z1 and Z2 are reset to the 0 condition, the steps of fill, circulate, pause and drain described above are repeated. In addition, the following actions occur. At the start of the circulation step of the subcycle, with a condition of Z1, $\overline{Z2}$, the output of NAND gate Z6A together with the conditions of Z3, $\overline{Z4}$ actuate NAND gate Z8C to operate the first detergent dispenser 22. The output of NAND gate Z8C is also inverted and connected through OR gate Z6D, indicating wash, with the input of function timing NAND gate Z6C. The other input of NAND gate Z6C is a 4-minute signal from clock 30. As during the prerinse subcycle, motor 17 is operated to circulate water by the output of NAND gate Z6A and inverter 48. After the 4-minute wash step, the pause and drain steps are repeated, as described above.

On completion of the drain function, when Z2 is reset to 0, Z3 is reset to 0, and Z4 is set to 1. This represents the second wash subcycle. The repetitive steps again start and on completion of the fill step, with an output from Z6A, the conditions of $\overline{Z3}$, Z4 actuate NAND gate Z9A energizing the second detergent dispenser 23. The inverted output of NAND gate Z9A, through OR gate Z6D, provides a wash input to cycle timer NAND gate Z6C. When the second 4-minute wash period ends, the wash water is drained and program circuit means 40 is again actuated; at this time, Z14B has a 1 output ($\overline{Z4}$ is 0) setting Z3 to the 1 condition.

Z3, Z4, $\overline{Z5}$ establish the first rinse subcycle. Again the repetitive steps of the subcycle are controlled by Z1, Z2. Upon completion of the filling operation, with Z1 set, NAND gate Z8A has an output providing an input to timing NAND gate Z6B.

After the first rinse subcycle is complete, Z3 and Z4 are reset to 0 and Z5 is set through NAND gate Z10C and with the 0 output from Z2. This initiates the second rinse subcycle. The combination of $\overline{Z3}$, $\overline{Z4}$ and an inverted output from Z6A actuates NAND gate Z8B, and through OR gate Z9B provides an input to timing NAND gate Z6B. Washing additive dispenser 44 is actuated by the absence of a 0 output from flip-flop Z5. The repetitive subcycle is carried out as described above. After the second rinse is complete, Z1 and Z2 return to 0 condition and Z3 is set to 1. This set does not affect either Z4 or Z5 and they remain in the 0 and 1 conditions, respectively.

The drying subcycle is established by the combination of Z3, $\overline{Z4}$, Z5. Heater 25 is energized by virtue of the $\overline{Z9}$ input to OR gate Z16A. When the dry subcycle is completed, as indicated by closing of thermostat contacts 53, an output is developed by NAND gate Z9C again resetting the clock 30 and terminating the washer operation.

The operating cycle may be modified by actuation of the switches SW2–SW5. The function of turbidity sensor switch SW2 has been described above. If SW3 is placed in the "on" position, flip-flop Z4 is set to the 1 position at the start of the operating cycle. The prerinse and first wash are omitted. The operation starts with the second wash and continues as described above.

Double pole switch SW4 provides a rinse only operation by setting both Z3 and Z4 to the 1 position at the start. The first subcycle is the first rinse, described above. This is followed by the second rinse and dry subcycles.

If switch SW5 is closed, the thermostat 53 input is supplied to NAND gate Z9C and the drying operation is cancelled. A resistor 53a is connected from ground to the thermostat input line connecting to NAND gate Z9C to supply logic 0 when switch SW5 or thermostat 53 are open.

FIG. 6 is illustrative of a dishwasher control having clock, program circuit means and gating circuits (which may be similar to those of FIG. 4 although some of the specific function capabilities are different), identified as control circuit block 60. The digital control circuitry of block 60 may, for example, advantageously be an integrated circuit utilizing metal oxide semiconductor (MOS) elements deposited on a single silicon chip. The various connections to control circuit 60 are made through numbered terminals. The power circuit for the dishwasher (as the circuit 43 in FIG. 4) which responds to signals from the control circuit to initiate and terminate the operating functions of the dishwasher and including the various operator and apparatus inputs together with their related circuits, is shown in detailed schematic form.

The discussion of the power circuits is based on certain assumptions regarding the operation of control circuit 60. The following cycle of operation will be assumed:

Step No.	Function	Time	Selected Cycle
1	Fill	2 Min.	Normal wash cycle
2	Rinse	3 Min.	
3	Pause	4 Sec.	
4	Drain	1 Min.	
5	Fill	2 Min.	
6	Wash	3 Min.	

	(Detergent 1)		
7	Pause	4 Sec.	
8	Drain	1 Min.	
9	Fill	2 Min.	Short Wash Cycle—start
10	Rinse 1	3 Min.	
11	Pause	4 Sec.	
12	Drain	1 Min.	
13	Fill	2 Min.	
14	Wash	5 Min.	
	(Detergent 2)		
15	Pause	4 Sec.	
16	Drain	1 Min.	
17	Fill	2 Min.	Rinse Only Cycle—start
18	Rinse	3 Min.	
19	Pause	4 Sec.	
20	Drain	1 Min.	
21	Fill	2 Min.	
	(Wetting Agent)		
22	Rinse	3 Min.	or Thermostat
23	Pause	4 Sec.	
24	Drain	1 Min.	
25	Dry	5 Min.	or Thermostat
26	End of Cycle		

The control circuit is energized from a suitable source as 60 H_z AC connected with terminals N (ground) and L1. An interlock switch **61** is connected between power lead **62** and terminal L1. This interlock switch may be associated with the door or handle of the dishwasher, breaking the power circuit when the door is opened thereby interrupting the energization of the dishwasher components such as the pump motor, heater, solenoids, etc. Since the power supply for control circuit block **60** remains energized, and since there is no 60 H_z input to the clock portion of circuit **60** via resistor **110** and control circuit terminal T24, the status of control circuit block **60** is maintained and when the dishwasher door is closed, connecting power lead **62** to terminal L_1 via interlock switch **61**, the dishwasher program will resume starting from the portion of the program which was interrupted on opening of the door.

Several power switching circuits control the application of power to functional elements of the apparatus. The circuit enclosed in broken line box **63**, which actuates the fill solenoid valve **64** is typical. A driver transistor **65** has its base connected with control circuit terminal T21 which provides a signal causing the transistor to conduct when the fill solenoid **64** is to be energized. Transistor **65** is connected with the gate terminal of a bi-directional current-conducting semi-conductor **66** commonly known as a Triac. Triacs, which are well known in the electronics art, normally exhibit a high impedance between their end terminals and exhibit a low impedance therebetween in response to the application of a signal, having an amplitude greater than a pre-determined magnitude, to their third or gate terminal. When transistor **65** conducts, it connects the gate of Triac **66** with a source of operating potential to be described below. This causes the Triac **66** to conduct, connecting the fill solenoid **64** from power line **62** to ground **67**. Connected in series with fill solenoid **64** is an overfill limit switch **68** which opens if the dishwasher is overfilled to a predetermined level. Normally the actuation of fill solenoid **64** is timed by the duration of the signal from control **60**. When the signal is not present, transistor **65** ceases conducting and the power circuit through Triac **66** is broken.

The power supply for the various control circuits includes a transformer **70** having a primary winding **70***a* connected across the power line. Two rectifier circuits are connected with secondary winding **70***b*. A half-wave rectifier diode **71** provides a negative operating potential for control circuit **60**. Capacitor **72**, shunted by series connected resistors **73**,**74**, and returned to ground **67**, filters the output of the rectifier. Zener diode **75**, connected in parallel with resistor **74**, provides a regulated output voltage at **76** for the control circuit **60**. Power input terminal T5 of circuit **60** is connected with the anode of zener diode **75** and terminal T1 is connected with ground **67**.

A timing reference input for control circuit **60** is obtained from the 60 H_z power line through current limiting resistor **110** connected with control circuit terminal T24. Diode **111** is connected from terminal T24 to the power supply **76** clamping the negative half-cycle of the input signal to provide an essentially square wave drive for the timing circuit.

Diodes **79**, **80** are connected in a full wave rectifier circuit, the output of which is filtered by capacitor **81**. The circuit is completed through center tap **82** of the portion of transformer secondary winding **70***b* to which diodes **79**, **80** are connected. The full wave rectifier circuit provides a negative operating potential for the transistor drivers and the Triac gates of the switching circuits which actuate the various elements of the apparatus. The connection of center tap **82** to ground **67**, completing the rectifier circuit, includes switching means which initiate and terminate the operating cycle of the dishwasher, as will appear.

Before considering the operation of the circuit in detail, the other switching circuits and their functions will be identified.

Switching circuits **83** and **84**, connected with terminals T20 and T19, respectively, of control circuit **60**, operate Triacs **83***a*, **84***a* to control the operation of motor **85** in the drain and circulate modes. The motor **85** includes starting windings **85***a* which are switched out during run by opening relay contacts **85***b*.

Switching circuit **86**, connected with terminal T17 of control circuit **60**, operates Triac **86***a* to control energization of heater **87**.

Switching circuit **88** operated from terminal T6 of the control circuit, actuates Triac **88***a* controlling solenoid **89** which dispenses wetting agent during the final rinse. Switching circuits **90** and **91**, connected with control circuit terminals T4 and T3, actuate Triacs **90***a*, **91***a* to operate detergent dispensing solenoids **92** (first wash) and **93** (second wash).

Switching circuit **94**, control circuit terminal T2, is a part of the cycle control for the full wave rectifier.

Various conditions of the dishwasher, either in its operation or as preset by the operator, provide inputs to control circuit **60** by connecting the control circuit terminals either with ground **67** (logic 0) or negative supply **76** (logic 1). Condition sensors include thermostats **95**, **96** associated with the rinsing and drying subcycles, respectively, and turbidity sensor **98** which is connected with terminal T16 via switch **98***a* (see the position shown in broken line in FIG. **6**) to effect repetition of the prerinse subcycle if that should be necessary. Switch **98***a* gives the operator the option to bypass turbidity sensor **98** if such an operation program should be desired. If the operator chooses not to use the turbidity sensor **98**, the switch **98***a* is positioned as shown in solid line in FIG. **6** to connect terminal T16 to negative supply **76** (logic 1).

The operator input switches serve a variety of functions and have been labeled in FIG. **6** to facilitate a better understanding of the invention. Switch **99** is a double-pole, double-throw momentary contact switch used to start the cycle of operation by connecting center-tap **82** to circuit terminal T1, and at the same time also connecting terminal T15 with power supply **76**. Single-pole, double-throw switch **100** provides a "Rinse Only" operation by connecting terminal T11 with power supply **76**. Single-pole, double-throw switch **101**, connected with control circuit terminal T18, limits the amount of water in the dishwasher by setting up an **80** second fill. The dishwasher is only partially filled and a "Gentle" or soft wash action results.

Switches **102** and **103** shunt thermostats **95** and **96** respectively, to provide the operator with the option of thermostat control over the rinse and dry cycles. When switches **102** and **103** are operated to the positions shown in solid line in FIG. **6**, resistors **104** and **105** are connected from ground **67** to the thermostat input terminals T8 and T7 of the control circuit and supply logic 0 to control circuit **60**, and the thermostats **95** and **96** are open. This cuts out the thermostat control over the rinse and dry cycles. If the operator desires thermostat control over the rinse and dry cycles, the switches **102** and **103** are operated to the positions shown in broken line in FIG. **6**. Of course, thermostat control over either the rinse or the dry cycle can selectively be obtained by operation of either

the switch **102**, or the switch **103** to its position shown in broken line as indicated above. Double-pole, double-throw switch **106** provides a "Normal Wash" when disposed as shown in FIG. **6**. A "Short Wash" cycle is provided when switch **106** is operated to the position indicated in broken lines, thereby to connect power supply **76** to terminal T**14**.

The operator input switches described above thus serve a variety of functions, and facilitate selection of the most appropriate appliance program for a particular operation. Due to the digital logic implementation of the present invention, any one of a number of different cycles may be readily selected, together with the most suitable option of a number of applicable options (i.e., hot rinse, air dry, etc.), resulting in a very high degree of control flexibility not possible with home appliance controls of the prior art. In the illustrated embodiment, the operator may manipulate the proper input switch and thereby select any one of three cycles as follows: "Normal Wash Cycle," "Short Wash Cycle;" or a "Rinse Only Cycle." These cycle designations are self-explanatory. After selecting the desired cycle, in the illustrated embodiment the operator may, in similar fashion, manipulate the appropriate input switch and thereby select the most appropriate one of a number of different cycle options as follows: "Gentle," in which the dishwasher is only partially filled with water and a gentle, soft wash action results; "Hot Rinse," instead of normal rinse; "Heat Dry," instead of air dry without use of heat; and "Turbidity," to utilize sensing by a turbidity sensor such as sensor **98** to determine the need for repetition of the prerinse subcycle. Thus, in the illustrated embodiment, the operator has a choice of **32** different appliance programs as follows:

1. Normal Wash Cycle
2. Normal Wash Cycle, Gentle
3. Normal Wash Cycle, Turbidity
4. Normal Wash Cycle, Hot Rinse
5. Normal Wash Cycle, Heat Dry

6. Normal Wash Cycle, Gentle, Turbidity
7. Normal Wash Cycle, Gentle, Hot Rinse
8. Normal Wash Cycle, Gentle, Heat Dry
9. Normal Wash Cycle, Gentle, Turbidity, Hot Rinse
10. Normal Wash Cycle, Gentle, Turbidity, Heat Dry

11. Normal Wash Cycle, Gentle, Turbidity, Hot Rinse, Heat Dry
12. Normal Wash Cycle, Turbidity, Hot Rinse
13. Normal Wash Cycle, Turbidity, Heat Dry
14. Normal Wash Cycle, Turbidity, Hot Rinse, Heat Dry
15. Normal Wash Cycle, Hot Rinse, Heat Dry

16. Normal Wash Cycle, Gentle, Hot Rinse, Heat Dry
17. Short Wash Cycle
18. Short Wash Cycle, Gentle
19. Short Wash Cycle, Hot Rinse
20. Short Wash Cycle, Heat Dry

21. Short Wash Cycle, Gentle, Hot Rinse
22. Short Wash Cycle, Gentle, Heat Dry
23. Short Wash Cycle, Hot Rinse, Heat Dry
24. Short Wash Cycle, Gentle, Hot Rinse, Heat Dry
25. Rinse Only Cycle

26. Rinse Only Cycle, Gentle
27. Rinse Only Cycle, Hot Rinse
28. Rinse Only Cycle, Heat Dry
29. Rinse Only Cycle, Gentle, Hot Rinse
30. Rinse Only Cycle, Gentle, Heat Dry

31. Rinse Only Cycle, Hot Rinse, Heat Dry
32. Rinse Only Cycle, Gentle, Hot Rinse, Heat Dry

After selection of the desired cycle, and cycle option as described above, a program of operation is initiated by actuation of switch **99** by the operator. This grounds the center tap **82** of the full wave rectifier portion of the power supply, providing an operating potential for the transistor drivers of the various switching circuits. A logic **1** is applied to terminal T**15** of control circuit **60**, starting the cycle of operation. The transistor driver of switching circuit **94**, connected with terminal T**2** of the control circuit **60**, is turned on causing the Triac **94***a* to conduct, completing the power supply circuit in parallel with switch **99**. Switching circuit **94** continues to conduct until the end of the operating cycle.

At the end of the operating cycle, the output at terminal T**2** of the control circuit **60** terminates and switching circuit **94** ceases to conduct. This interrupts the center tap connection **82** of the power supply for the various switching devices and stops operation of the dishwasher.

Major portions of the circuitry of FIG. **6** may advantageously be mounted on a printed circuit board for improved reliability, economy, ease of manufacture, and ease of maintenance. In the embodiment of the invention illustrated in FIG. **6**, the portion of the circuitry shown above the broken horizontal line drawn through the series of lettered terminals A, B, C, etc. and identified with reference numeral **120** is mounted on a printed circuit board. Thus, the printed circuit board embodying the portion of the circuitry of the present invention identified with reference numeral **120** can be unplugged and readily removed from the appliance for circuit testing or exchange in the event of a malfunction.

A further important advantage of the present invention is that a circuit embodying the invention can be checked out very rapidly utilizing a relatively high frequency source for the timing countdown, in place of the 60 H_z frequency base for the disclosed countdown system, since the length of the timed portion of the operating cycle is inversely proportional to the frequency of the time base.

In FIG. **7**, there is shown a test apparatus **121** comprising, in one form, a box-like housing **121***a* for mounting the circuit components of apparatus **121** for quickly checking out the control of the present invention. A series of toggle switches, **122** through **128**, can be selectively operated to "On" or "Off" positions to establish the desired cycle, and cycle options, and thereby simulate any of the dishwasher appliance programs referred to above. The test apparatus **121**, in one form which has provided satisfactory results, incorporates a relatively high frequency source comprising a 4 KH_z multivibrator (not shown) to generate the timing countdown base instead of the 60 H_z line frequency base thereby to speed checking of the circuit.

The test apparatus **121** includes a start switch **130**, and a series of light bulbs **131***a*, **131***b*, etc., each corresponding to one of the components of the appliance circuit including the fill solenoid, the heater, etc., all as shown in FIG. **6**. A plug **121***b* is provided for energizing apparatus **121** via a conventional 60 H_z, 120-volt AC source. An elongated receptacle **121***c*, provided with terminals to cooperate with printed circuit board terminals A, B, C, etc., is mounted on one side of housing **121**a to receive the A, B, C, etc. terminal edge of the printed circuit board **120** in plug-in fashion. It will be appreciated that the apparatus **121** also includes in its circuit certain elements such as resistors, etc. (not shown) to provide the desired display for the checking of the circuitry **120** undergoing a checking operation as shown in FIG. **7**. After the operator selects the desired cycle and cycle options via switches **122–128** and then presses start button **130**, the control is enabled to proceed through the selected program at an accelerated rate with lighting of the bulbs **131***a*, **131***b*, etc. in a sequence simulating the energization and deenergization of the appliance components corresponding to the selected program or operating cycle. This provides a very fast and accurate means for checking out the circuit. The illustrated version permits in-field checkout of the control of the invention in less than one minute, which is a rate over 50 times faster than the rate of normal operation of the apparatus through a complete operating cycle. Thus, the present invention provides a fast and easy means for checking out an appliance control circuit, not possible with conventional control means.

The foregoing disclosure of specific embodiments is illustrative of the broad inventive concepts comprehended by the invention.

The embodiments of the invention in which an exclusive property or privilege is claimed are defined as follows:

1. In a home appliance having means for performing an operating cycle comprising a plurality of sequential functions which are initiated and terminated in accordance with one or the other of time or conditions of the appliance, an electronic control comprising:

a frequency count-down clock having a synchronizing pulse output and plural output timing signals representing different discrete time intervals; means for sensing conditions of the appliance;

program circuit means responsive to said synchronizing pulse output and having a plurality of sequential bistable states, said program circuit means being defined by a plurality of different sets of binary control means, the binary control means of said different sets cooperating to provide program signals representing the functions of the appliance;

gate circuit means responsive to said program signals, to said timing signals, and to said means for sensing conditions of the appliance for generating signals to initiate and terminate said functions; and

means responsive to termination of each function of the appliance for actuating said program circuit means from one stable state arrangement thereof to a next stable state arrangement.

2. The structure of claim 1 wherein said electronic control comprises a metal oxide semiconductor integrated circuit.

3. The structure of claim 1 wherein said control includes means for sensing a temperature condition in the appliance to provide an input signal for said gate circuit means.

4. The structure of claim 1 in which said program circuit means comprises a plurality of serially connected bistable flip-flop circuits.

5. The structure of claim 1 in which said means for sensing conditions in the apparatus includes manually operable input means.

6. The structure of claim 5 in which said manually operable input means provide an input to said program and gate circuit means to initiate an operating cycle of the apparatus.

7. The structure of claim 5 in which said manual input means includes adjustable means connected with said program circuit means for modifying the sequence of functions of an operating cycle.

8. The structure of claim 1 in which one set of said program circuit means controls a series of functions repeated in each of a plurality of subcycles and another set controls the sequence of subcycles.

9. A control for the cycle of operation of a washing appliance operable through a series of subcycles including a wash subcycle, means for circulating water in the appliance, and means for draining water from the appliance, said control means comprising an integrated circuit means including;

a source of timing signals comprising a frequency count-down clock having plural outputs representing different time intervals;

means establishing a sequence of subcycles including wash and rinse;

means responsive to said timing signals and said subcycle sequence establishing means for establishing the length of each subcycle;

means responsive to termination of a subcycle for selecting the next subcycle; and

means responsive to the selected subcycle for actuating said operating means to perform said subcycle.

10. The control of claim 9 wherein said appliance includes means for drying that which is washed therein and the drying operation comprises one of said subcycles controlled by said control.

11. The control of claim 9 wherein said means for establishing a sequence of subcycles includes a plurality of interconnected bistable circuits each having two operating states, means responsive to the condition of said bistable circuits for determining the subcycle to be performed, and means operative at the end of the subcycle for changing the setting of said bistable circuits.

12. The control of claim 11 including means for resetting said bistable circuits at the start of the operating cycle.

13. The control of claim 11 including means for selectively presetting said bistable circuits to start the operating cycle with a desired subcycle.

14. The control of claim 9 including means responsive to a condition of the washer for repeating a subcycle.

15. The control of claim 11 including a gate responsive to the subcycle being performed and to an output of the source of timing signals to indicate the end of the subcycle.

16. The control of claim 14 including a turbidity sensor and a gate responsive to the rinse subcycle for continuing the rinsing operation.

17. The control of claim 15 wherein said washing appliance includes means for drying that which has been washed, said control having a dry subcycle, and including a thermostat and a gate responsive to the thermostat and to the dry subcycle to terminate the dry subcycle when the temperature reaches a predetermined level.

18. The control of claim 17 including a manual switch in parallel with the thermostat to eliminate the dry subcycle.

19. The control of claim 11 including means responsive to the selected subcycle for changing the condition of the bistable circuits at the end of each subcycle.

20. The control of claim 19 wherein the means responsive to the selected subcycle includes a plurality of gates, each responsive to the condition of plural bistable circuits.

21. The control of claim 11 wherein one portion of the bistable circuits controls a series of steps repeated in each of a plurality of subcycles and another portion of the bistable circuits controls the sequence of subcycles.

22. The control of claim 21 including means for resetting said one portion of the bistable circuits after each subcycle.

23. The control of claim 21 including means for selectively presetting the other portion of said bistable circuits at the start of a cycle of operation.

24. The control of claim 21 wherein said one portion of the bistable circuits has a condition for each of the water supply, circulate, and drain steps in both the rinse and the wash subcycles and wherein the means responsive to selected subcycle includes gates responsive to said one portion of the bistable circuits for performing said steps in each subcycle.

25. In a home appliance apparatus having means for performing an operating cycle comprising a plurality of sequential functions which may be initiated and terminated in accordance with one or the other of time or conditions of the apparatus, a control comprising an integrated circuit utilizing metal oxide semiconductor elements deposited on a silicon chip, said control including:

means responsive to an alternating reference signal for generating time signals;

program circuit means having plural sets of bistable means each arranged to receive input signals and to provide output signals, said sets cooperatively defining a plurality of sequential stable states representing the functions of the apparatus;

gate circuit means responsive to an output signal provided by said program circuit means and to said timing signals, for generating signals to initiate and terminate said functions; and

means responsive to termination of each function of the apparatus by said gate circuit means for actuating said program circuit means from one stable state to the next.

26. The structure of claim 25 wherein said control includes means for sensing a condition in the apparatus, and the gate circuit means is responsive to the means for sensing a condition of the apparatus.

27. The structure of claim 26 wherein said control includes a first input means for selecting a desired operating cycle from two or more different operating cycles, and a second input means for selecting a desired cycle option from two or more different cycle options, whereby the operator has a substantial multiplicity of choices of operating cycles for the home appliance.

28. The structure of claim 25 wherein said control comprises a printed circuit board which may be unplugged from the home appliance apparatus to facilitate maintenance thereof.

29. The structure of claim 28 wherein said control comprises a printed circuit board having terminals adapted for connection to a source of alternating reference signals of relatively high frequency to facilitate a quick check of the condition of the control.

30. The home appliance control of claim 2 in which said metal oxide semiconductor integrated circuit provides output signals representing the initiation and termination of the sequential functions of the appliance, the control further including semi-conductor switches having control elements, circuits connecting the integrated circuit output signals with the control elements of said switches and circuits connecting the switches with the appliance to operate the functions thereof.

31. The home appliance control of claim 30 in which the circuits connecting the output signals of the integrated circuit with the semiconductor switches each includes a transistor driver.

32. The home appliance control of claim 31 in which said integrated circuit comprises elements deposited on a silicon chip, and in which said chip is mounted on a printed circuit board, and the semiconductor switches, driver transistors and interconnecting circuits are mounted on said circuit board.

33. A control for the cycle of operation of a washing appliance operable through a series of subcycles including plural wash subcycles, means for adding a washing compound to the water in each of the plural subcycles, means for circulating water in the appliance and means for draining water from the appliance, said control means including:

a source of timing signals;

means establishing a sequence of subcycles including subcycles of wash, rinse and drain, said means including a plurality of interconnected bistable circuits each having two operating states;

means responsive to the condition of said bistable circuits for determining the subcycles to be performed;

means responsive to the timing signals and the bistable circuit condition responsive means for establishing the length of each subcycle;

means actuated upon termination of a subcycle for changing the setting of the bistable circuits; and

means responsive to the selected subcycle including a plurality of gates, each responsive to a condition of some of the bistable circuits for actuating said washing appliance to perform said subcycle, the bistable circuits having conditions for the plural washing subcycles, the control means including plural gates, one responsive to the condition of the bistable circuits for each washing subcycle for operating each of said means for adding washing compounds, and a gate responsive to each of said plural gates to actuate theappliance to perform the washing subcycles.

34. In an apparatus having means for performing an operating cycle comprising a plurality of sequential functions which are initiated and terminated in accordance with one or the other of time or conditions of the apparatus, an electronic control comprising:

a source of timing signals;

means for sensing conditions of the apparatus;

program circuit means including a first section and a second section, each section comprising a plurality of serially connected bistable circuits, each bistable circuit having two stable states, and each section of the program circuit means having an input terminal and a plurality of output terminals, the bistable circuits within each section being interconnected to change state in sequence in response to an input pulse;

gate circuit means responsive to the output signals of the first and second sections of said program circuit means establishing the function and subcycle respectively of the apparatus, to said timing signals, and to said means for sensing conditions of the apparatus for generating signals to initiate and terminate said functions;

means responsive to termination of a function of the apparatus for generating a switching impulse, connected to the input of the first program circuit section; and

a circuit connecting the output of the first program circuit section with the input of the second program circuit section, the first program circuit section assuming a series of sequential stable states representing different functions of the apparatus before generating an input pulse for the second section of the program circuit which selects the subcycle of operation of the apparatus.

35. The apparatus control of claim 34 including manual switch means connected with the bistable circuits of the second section of said program circuit means and operable to preset the subcycle of the program for the apparatus.

36. In an apparatus having means for performing an operating cycle of a plurality of sequential functions which are initiated and terminated in accordance with one or the other of time or a condition of the apparatus, an electronic control comprising:

an electronic clock actuated by alternating current, performing a counting function to provide timing signals for said control;

means for sensing conditions of the apparatus;

program circuit means having a plurality of sequential stable states representing the functions of the apparatus;

gating circuit means responsive to said program circuit means, to said timing signals and to said means for sensing conditions of the apparatus for generating signals to initiate and terminate said functions;

means responsive to termination of each function of the apparatus for actuating said program circuit means from one stable state to the next;

a first alternating current circuit connected with a power supply including an alternating current-to-direct current rectifier providing operating potentials connected with said clock, program circuit, gate circuit and means for actuating the program circuit;

a second alternating current circuit providing alternating current to actuate said clock and to operate the functions of said apparatus; and

interlock switch means for interrupting the operation of said apparatus, including a switch in said second alternating current circuit, opening the switch to de-energize the apparatus functions and stop the clock, without affecting the power supply whereby the circuits energized therefrom maintain their conditions and on closing said switch the apparatus resumes operating from the point of interruption.

* * * * *