M. L. SEVERY & G. B. SINCLAIR.

ELECTRIC MUSICAL INSTRUMENT.

APPLICATION FILED AUG. 7, 1905. RENEWED FEB. 5, 1916.

1,198,070.

Patented Sept. 12, 1916.

4 SHEETS—SHEET 1.

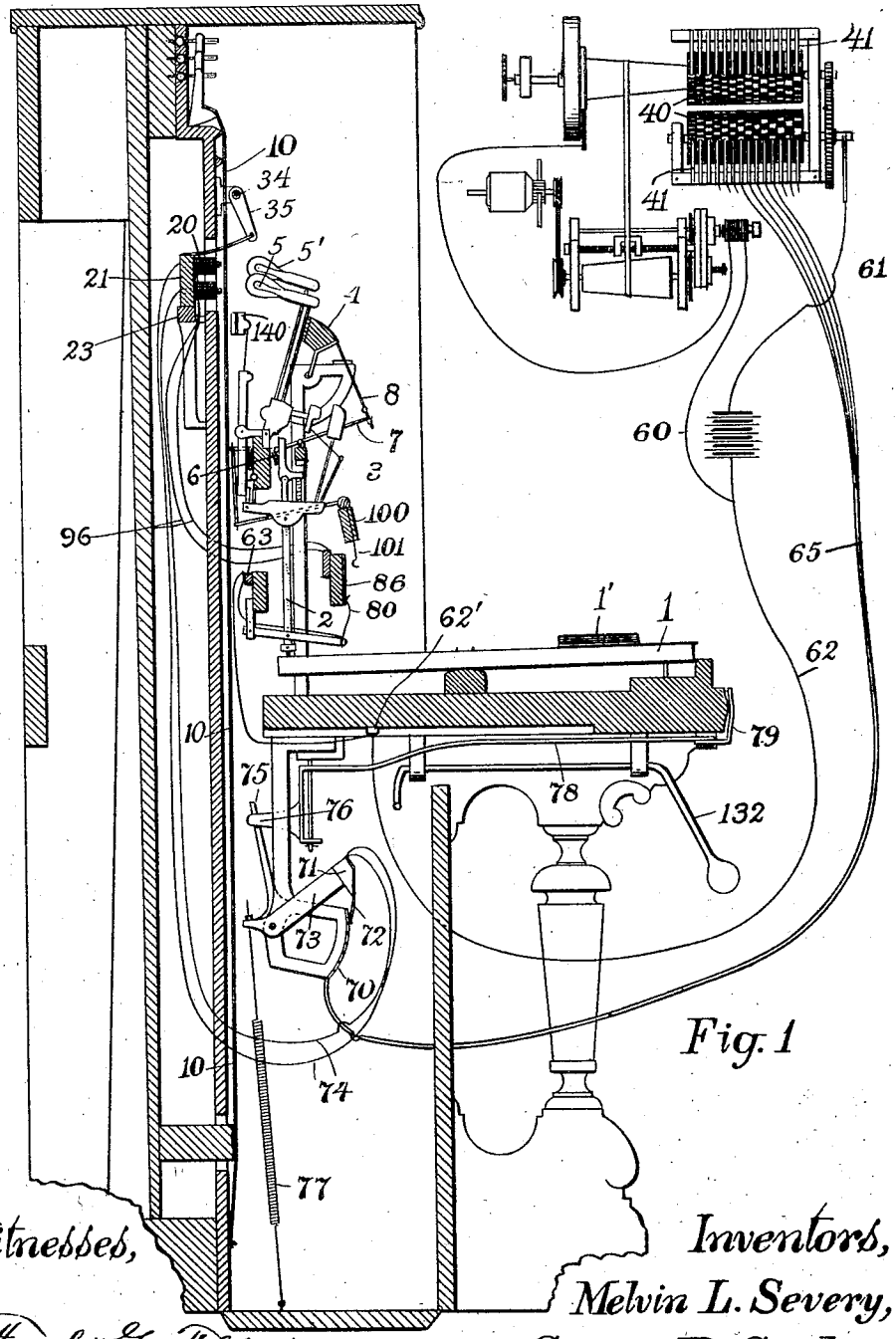

Fig. 1

Witnesses,

Fred G. Fenton

L. M. Maxham

Inventors,

Melvin L. Severy,

George B. Sinclair;

By A. B. Upham, Attorney.

M. L. SEVERY & G. B. SINCLAIR.

ELECTRIC MUSICAL INSTRUMENT.

APPLICATION FILED AUG. 7, 1905. RENEWED FEB. 5, 1916.

1,198,070.

Patented Sept. 12, 1916.

4 SHEETS—SHEET 2.

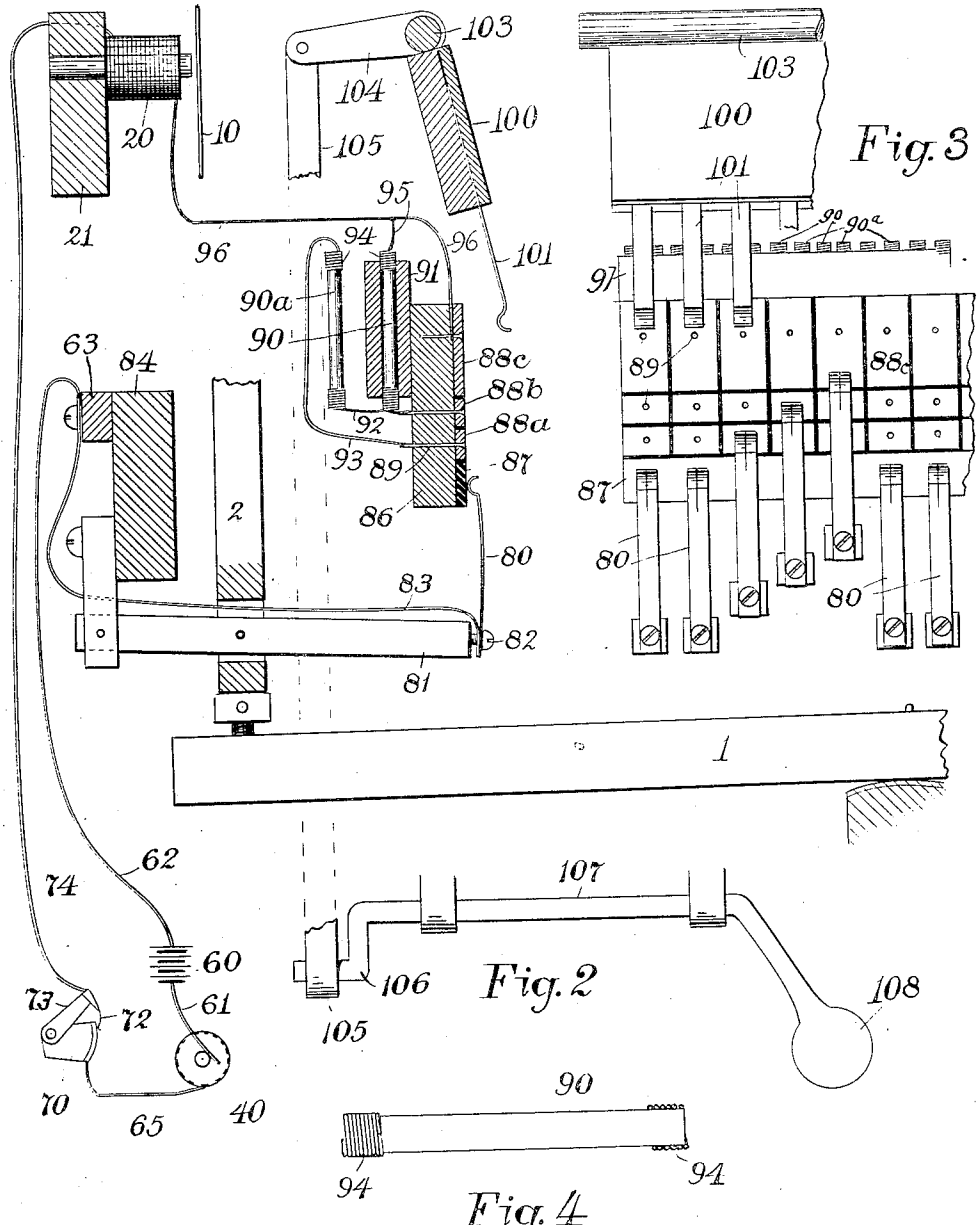

Fig. 3

Fig. 2

Fig. 4

Witnesses,

Fred G. Tilton,

L. M. Maxham.

Inventors;

Melvin L. Severy;

George B. Sinclair;

By A. B. Upham,

Attorney

M. L. SEVERY & G. B. SINCLAIR.

ELECTRIC MUSICAL INSTRUMENT.

APPLICATION FILED AUG. 7, 1905. RENEWED FEB. 5, 1916.

1,198,070.

Patented Sept. 12, 1916.

4 SHEETS—SHEET 3.

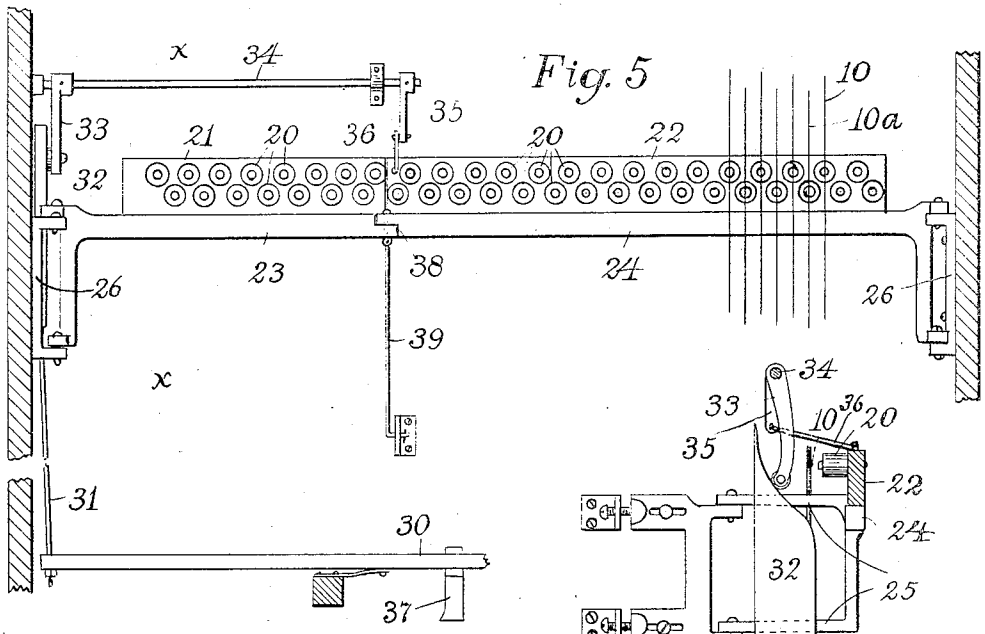

Fig. 5

Fig. 6

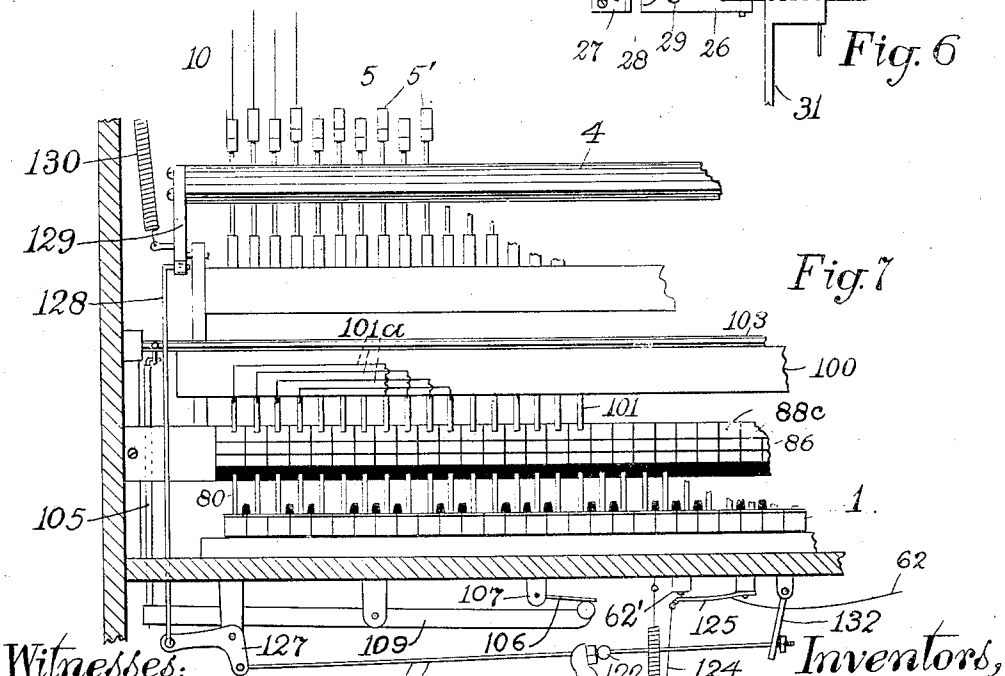

Fig. 7

Witnesses;

Fred G. Fisher,

L. M. Mapham.

Inventors,

Melvin L. Severy,

George B. Sinclair;

By A. B. Upham,

Attorney.

M. L. SEVERY & G. B. SINCLAIR.

ELECTRIC MUSICAL INSTRUMENT.

APPLICATION FILED AUG. 7, 1905. RENEWED FEB. 5, 1916.

1,198,070. Patented Sept. 12, 1916.

4 SHEETS—SHEET 4.

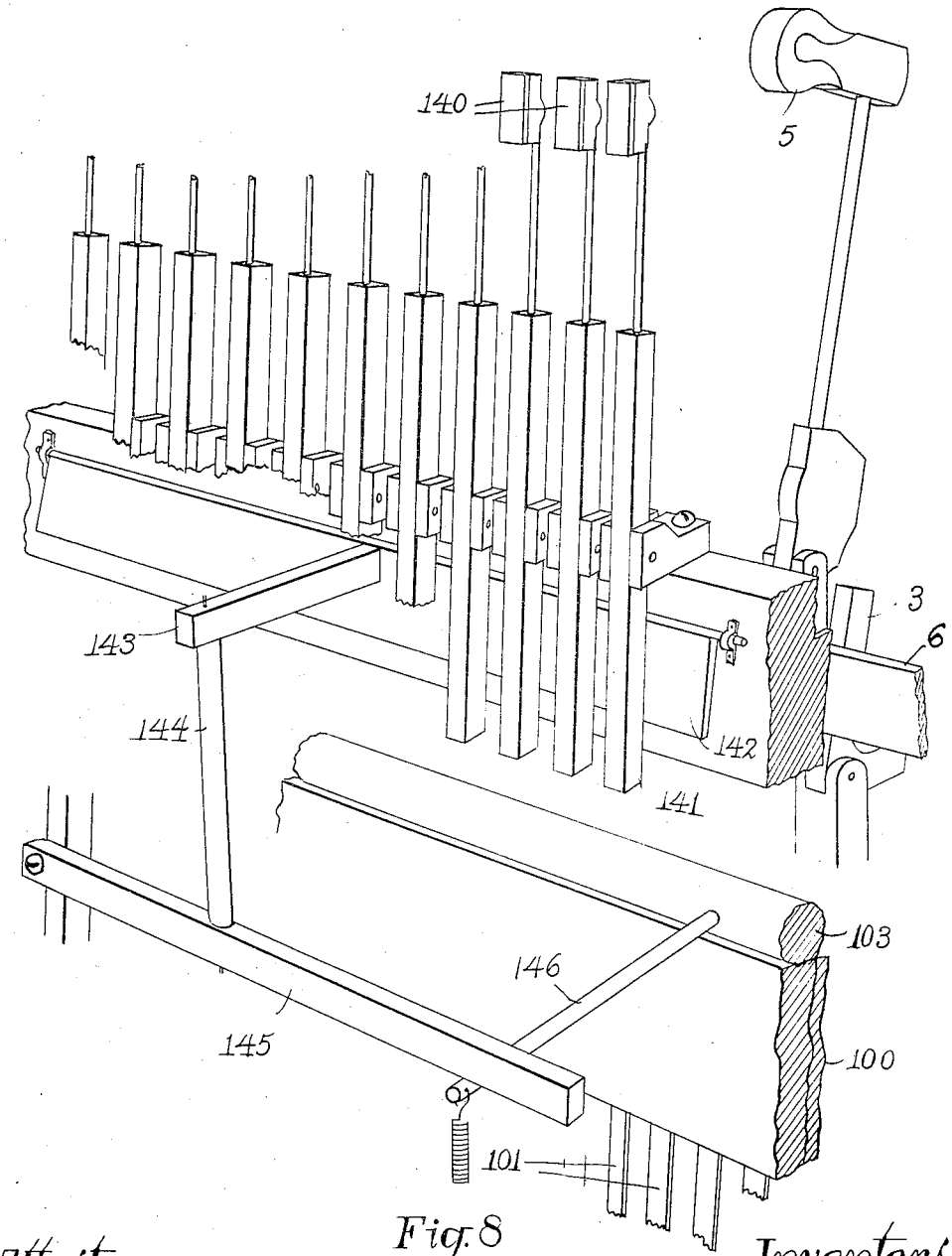

Fig. 8

Attest;

Fred L. Tilton,

L. M. Matham.

Inventors,

Melvin L. Severy,

George B. Sinclair;

By A. B. Matham.

Attorney

UNITED STATES PATENT OFFICE.

MELVIN L. SEVERY, OF ARLINGTON HEIGHTS, AND GEORGE B. SINCLAIR, OF WINTHROP, MASSACHUSETTS, ASSIGNORS TO CHORALCELO MANUFACTURING COMPANY, A CORPORATION OF MAINE.

ELECTRIC MUSICAL INSTRUMENT.

1,198,070. Specification of Letters Patent. Patented Sept. 12, 1916.

Application filed August 7, 1905, Serial No. 273,199. Renewed February 5, 1916. Serial No. 76,458.

To all whom it may concern:

Be it known that we, MELVIN L. SEVERY, of Arlington Heights, in the county of Middlesex, Commonwealth of Massachusetts, and GEORGE B. SINCLAIR, of Winthrop, in the county of Suffolk, in said Commonwealth, both citizens of the United States, have invented certain new and useful Improvements in Electric Musical Instruments, of which the following is a full, clear, and exact description.

Our invention relates to that class of musical instruments in which strung wires are caused to vibrate by means of a key-board; and the objects of our invention are the effecting of improved means whereby the strings may be vibrated either by the striking action of hammers, or by magnetic pulsations; the same operating either in conjunction with each other, or either one without the other.

Our invention further relates to various improvements in details of construction hereinafter set forth.

In certain copending applications we have shown, described and claimed, in some instances broadly and in others more specifically, features which are illustrated and described in the present application, but which are not herein claimed or are here claimed only in the specific construction or combination expressed. In other copending applications we have broadly claimed the art of producing musical tones, which art is involved but is not claimed in the present application. All matters set forth and claimed in copending applications filed in our joint names, or in the name of either of us, and not definitely expressed in the claims hereof, are expressly saved and reserved for one or another of said copending applications, in which such matters are claimed or intended to be claimed. Among these copending applications may be noted the following joint applications: Serial No. 273,201, filed August 7, 1905; Serial No. 273,202, filed August 7, 1905; Serial No. 377,571, filed June 6, 1907; Serial No. 379,714, filed June 19, 1907; Serial No. 384,872, filed July 22, 1907; Serial No. 537,257, filed January 10, 1910; Serial No. 563,437, filed May 25, 1910; Serial No. 710,637, filed July 20, 1912; Serial No. 753,014, filed March 8, 1913; Serial No. 757,872, filed March 31, 1913; and Serial No. 793,481, renewal, October 4, 1913.

Referring to the drawings forming part of this specification, Figure 1 is a side sectional elevation of an upright piano made in accordance with our invention; showing our improved device for the production of electric pulsations connected therewith. Fig. 2 is a side sectional elevation nearly full size of certain details of the electric connections of the key-action, and of the octave-coupler. Fig. 3 is a face view of a part of the octave-coupler. Fig. 4 is a view upon an enlarged scale of one of the rheostats used in the action. Fig. 5 is a front elevation of the magnet-rail, showing portions of the sides of the piano-case in section. Fig. 6 is a detail elevation of one of the pivotal supports of said magnet-rail, showing the latter in cross-section on the line x—x in Fig. 5. Fig. 7 is a front elevation of a part of the action and electric devices of said piano. Fig. 8 is a perspective view, from the rear, showing the devices by means of which the octave coupler, when thrown into action, removes all of a certain set of dampers from contact with their strings.

In the piano illustrated in the drawings, the reference numeral 1 designates the "white" keys, and 1′ the "black" keys thereof; 10 indicates the strings, and 5, 5′ the hammers operated by the manipulation of said keys, through the medium of substantially the usual form of action. Said hammers are shown in Fig. 1 in their "dumb" position, being supported therein by the hammer rail 4.

Behind the strings facing the hammers, are the electro-magnets 20 by means of which the strings are magnetically actuated when properly timed electric pulsations are communicated to such magnets. To permit the strings to be at the same time mechanically actuated, the hammer rail 4, which is pivotally connected to the action-bracket, is lowered to said bracket and the hammers, of course, lowered also. At the same time, the thin bar or plate 6 which is loosely supported behind the jacks 3 is returned to its normal vertical position, thereby permitting the jacks to swing backward into a position to engage and operate the hammers when the said jacks are thrown upward by the depression of the keys. Said bar 6 is thus moved by means of the arm 7 rigid therewith, and a link 8 joining said arm to the hammer rail.

From this it will be evident that all that requires to be done in order to render the hammers inoperative, is to raise the hammer rail to the position shown in Fig. 1, thereby causing the bar 6 to press the jacks out of possible engagement with the hammers. The means for shifting the hammer rail as just described consists of a connecting rod 128 (see Fig. 7) pivoted at one end to the bell-crank lever 129 forming one pivotal support for said rail, and at its other end to the bell-crank lever 127; the latter being joined by the rod 126 both to the knee-swell 132 and to a pedal (not shown). Normally the hammer rail is retained in its upper or "dumb" position by the tension spring 130, but by pressing the knee-swell 132 (also shown in Fig. 1) toward the right, the rail is lowered and the hammers put in proper position to be actuated by the keys.

The conditions of the parts shown in Fig. 1 represent the instrument as adjusted for electric actuation of the strings alone. To actuate the strings both electrically and mechanically simultaneously, the hammer rail 4 is brought to its lowermost position, by pressure applied to the knee-swell 132 and a consequent overcoming of the spring 130. See Figs. 1 and 7. This knee-swell draws upon the rod 126 and the other connecting parts between such swell and said hammer rail, without affecting the bell-crank lever 121, and consequently without opening the circuit at 125. The hammer rail being thus lowered, the plate 6 is made to release the jacks 3, and the latter and also the hammers are in condition to be actuated upon the depression of the keys 1.

If it is desired to render the hammers the sole means for actuating the strings, the rod 120 (Fig. 7) is depressed by means of suitable pedal connection, and the bell-crank lever 121 caused to engage the nuts or stops 122 on said rod 126 and thereby lower the hammer rail in the same manner as does the knee-swell 132. A link 124 joins said bell-crank lever 121 to a switch tongue 125 which forms part of the circuit 62 between the magnets 20 and the source of electricity. The depression of said rod 120 consequently withdraws said switch tongue out of touch with the contact 62′ and so breaks the circuit and renders the electric actuation impossible so long as the said rod 120 is depressed. When the latter is released a suitable spring 123 insures the proper movement of the bell-crank lever 121 to permit said tongue to again complete the circuit.

For the electric actuation of the strings, each lower connection 81 (Fig. 2) is extended forward a short distance from its extension 2, and is provided with an upwardly reaching brush 80 affixed thereto by a screw 82. From this brush a thin copper ribbon 83 passes back and upward to the conductor bar 63 which is supported by the lower rail 84; and from said bar a lead 62 returns the current to the source 60. The opposite pole of said source of current 60 is joined by the wire 61 to the pulsating device 40, and the latter joined by cable 65 to the timbre controller 70. From the brushes 72 of the latter, wires 74 pass to the magnets 20; and thence wires 96 connect with the rheostats 90, 90^a and contacts 88^c. In this manner, when a key is depressed, its brush 80 is first brought into touch with the contact 88^a, thereby directing the current through the pin 89, wire 93, rheostat 90^a, wire 92, rheostat 90, wire 95, and the other conductors above described. This introduces the maximum resistance into the circuit, and so imparts to the magnet 20 a minimum strength of current. Further depression of the key brings the brush 80 into touch with the contact 88^b, and thereby omits one rheostat (90^a) from the circuit; consequently increasing the strength of current transmitted. When said brush reaches the third contact 88^c, both rheostats are cut out and the maximum strength of pulsations is conveyed to the magnet.

Normally the brushes 80 are in contact with the insulating strip 87, and so no current can pass until the keys are depressed. When a key is manipulated quickly, the three strengths of current are not discerned; but if depressed and released slowly, a crescendo and diminuendo effect is produced; if they are depressed but partially, a piano effect is obtained; if farther, a louder note is sounded,—thereby giving ample expression in the individual operation of the strings.

In addition to the above-described function obtained by means of the action-rail resistances traversed by the key-actuated brushes, there is an almost equally important one of which mention has not yet been made. It is that of practically eliminating sparking when the keys open the actuating circuits. This is evident when it is recalled that when a key-controlled brush is elevated a high resistance is in the circuit of the first contact engaged thereby, followed by reduced resistances as the brush continues to rise until all is cut out. Similarly, as the brush returns, more and more resistance is cut into the circuit until the latter is broken with a minimum of current.

To supply a means for the collective variation in the magnets' strength of current, we have devised the following: Inasmuch as the strength of magnetic attraction varies in inverse proportion to the squares of the distances, the influence of a magnet 20 upon a string 10 is considerably reduced by removing such magnet to a limited distance therefrom. Consequently, by suitably moving the magnets toward and from the strings, a

wide range in expression can be secured. We have discovered, however, that to withdraw all the magnets equally from their strings will not produce a uniform piano effect, but that some of the strings will become almost inaudible while others remain practically unaffected. We eventually succeeded in overcoming such defect by pivoting the magnet rail at each end and jointing it at an intermediate point, as shown in Fig. 5. The two sections 21, 22 are supported on the metal bars 23, 24 jointed at 38 and formed with arms 25 pivoted to supports 26 (see Fig. 6) made adjustable by means of fixed stops 27, adjusting screws 28 and fastening screws 29. Said jointed magnet rail is shifted by the rock-shaft 34, arm 35 joined by link 36 to the rail close to its joint, and arm 33 engaged by the cam-wedge 32; the latter being moved vertically by the rod 31, lever 30 and pedal 37. By pressing upon said soft pedal 37, said wedge cam is moved upward and the magnets moved farther from the wires; those nearest the joint having the longest range of movement, as specifically set forth and claimed in our companion application Serial No. 273201.

As shown in Fig. 5, the magnets 20 are staggered with respect to each other, in order that they can be made of a sufficiently large diameter to properly vibrate the strings. Consequently, to cause them to affect the strings at their proper striking points, the strings 10 and 10^a must be similarly staggered, and the hammers also. To thus stagger the hammers, their stems are made of unequal lengths, as shown in Fig. 1; 5 and 5′ being two such staggered hammers.

The rheostats above described consist each of a slender rod of compressed graphite located in holes in the wooden bar 91. These are arranged in a single row as shown in Fig. 3, a pair to each key; but to show their arrangement more easily, a pair is shown with one out of position in Fig. 2; one appearing unsupported by said bar. To enable a wire to be connected to said rheostats, we press short coils of fine wire upon the ends of the rods 90, and then solder very easily any desired wire to such coils. This arrangement of rod and coils is shown in Fig. 4 upon an enlarged scale; the coils being shown both in section and in elevation.

The timbre controller, which is set forth more fully and claimed in our companion application Serial No. 273202, consists of a frame supporting a large number of contacts 70 located in numerous crossing rows and insulated each from the other; and a swinging frame consisting of pivoted arms 73 and cross-bar 71 carrying brushes 72 contacting with said contacts. Said brushes are put into touch with any one of the horizontal rows of contacts by means of the pointer, 79, lever 78, 76, and arm 75 rigid with one of the arms 73. The lever-section 76 is not perpendicular to the sounding board of the piano as appears from the showing in Fig. 1, but is approximately parallel therewith in order that a swing given to the lever 78 shall give to the arm 75 an oscillation toward or from the sounding board of the piano, and hence a vertical swing to the brushes 72. A tension spring 77 counterbalances the frame 73, 71 and the brushes. The lowest row of contacts is wired to the cable 65, each contact in said row being connected with one of the brushes 41 of the make-and-break devices comprising the toothed disks 40 suitably rotated as illustrated at the upper right section of Fig. 1. Each brush 72 is wired to one of the electromagnets 20 as already described; consequently when the brushes are put into touch with the said lowest row, the normal pulsations from each toothed disk 40 are transmitted directly to the strings for which they are designed, but, as the contacts in this first row are wired to differently positioned contacts in each other row, the elevation of said brushes 72 to any other row causes various pulsations bearing predetermined relations to the strings to be transmitted to the latter, and so materially changes the quality of the tones produced.

Another improvement which materially adds to the desirability of this musical instrument is our octave coupler. This consists of a swinging board 100 carrying brushes 101 disposed to be brought into touch with the contacts 88^c whenever said board is swung toward the rheostats, as shown in Figs. 2 and 3. Each brush being wired to the others in octaves therefrom as shown at 101^a in Fig. 7, every time a key is struck when the brushes 101 are in touch with the contacts 88^c, both the strings connected therewith will vibrate, and in addition others in octaves therewith. The means for operating the octave coupler consists of the arm 104 rigid with the rock-shaft 103 by which said board is supported; and the knee-swell 108 connected to said arm through the medium of the rod 105, crank-arm 106 and shaft 107.

We find that a very desirable effect is produced when the octave coupler is used during the piano's electrical operation, by undamping the entire upper octave. To do this automatically when the octave coupler is operated, we have devised the following arrangement. The rock-shaft 103 is provided with a rigid arm 146 projecting rearward beneath the lever 145 (see Fig. 8); a post 144 conveys the rise of said lever to the arm 143 rigid with the plate 142 pivoted along its upper edge to the rail to which the dampers 140 and the hammers 5 are attached, but close behind the tails 141 of said dampers. By such means the swing of the

octave coupler to bring its brushes 101 against the contacts 88^c, is made to throw the dampers out of contact with their strings. In actual practice we find it well to thus automatically undamp one full octave at the upper end of the key-board.

Fig. 8 also shows more clearly a portion of the thin bar 6 by means of which the jacks 3 are thrown out of possible engagement with the hammers.

In all previous attempts at the construction of a magnetically operated musical instrument of this type, the sounding-board has been located upon the same side of the wires as the hammers, and the electromagnets were fixed upon the opposite side of the strings from the sounding-board. We have discovered that the best results are produced by locating the electromagnets upon the same side of the strings with the sounding-board, and after considerable study and experiment were able to construct a sounding-board, bridges and connections which permitted of this being done.

The note coupler illustrated in the drawings and originally claimed herein is made the subject of a divisional application, Serial No. 77064, filed February 8, 1916, in compliance with official requirement.

What we claim as our invention and for which we desire Letters Patent is as follows, to wit;—

1. A musical instrument comprising tuned sonorous bodies, electric means for their actuation, a keyboard controlling said electric means, hammers for percussively vibrating said bodies operated by said keyboard, and means controlled at will for rendering either or both said hammers and electric means operative or inoperative.

2. A musical instrument comprising tuned magnetically attractive strings, electromagnets for vibrating them, means for delivering electric current to said electromagnets, rotating make-and-break devices in the circuits of such current, a keyboard controlling the said circuits, hammers operated by said keyboard for percussively vibrating said strings, and means controlled at will for rendering either or both said hammers and electric means operative or inoperative.

3. A musical instrument comprising tuned sonorous bodies, electromagnets for their actuation, means for delivering properly timed electric pulsations to said electromagnets, a keyboard, hammers for percussively vibrating said bodies, an action for said hammers provided with a vertical extension rising above each key and reciprocated thereby, and a terminally pivoted lower connection oscillated by said extension, fixed contacts in the circuits to each electromagnet, extensions from said lower connections terminating beneath said contacts, and brushes carried by said extensions adapted to be moved into touch by the depression of said keys; said brushes being parts of the circuits to said electromagnets.

4. A musical instrument comprising tuned sonorous bodies, electromagnets for their vibration, means for delivering properly-timed electric pulsations to said electromagnets, a keyboard having movable keys, hammers for percussively vibrating said bodies, an action for said hammers controlled by said keys, fixed contacts in the circuit to each electromagnet, brushes forming parts of the circuits to said electromagnets, and means controlled by said keys for moving said brushes into touch with said contacts, said means being adapted for moving said brushes for distances materially in excess of the movements of the rear ends of said keys.

5. A musical instrument comprising tuned sonorous bodies, electromagnets for their vibration, means including circuits for delivering properly timed electric pulsations to said electromagnets, a keyboard having pivotally supported keys, hammers for percussively vibrating said bodies, an action for said hammers controlled by said keys, fixed contacts in said circuits, brushes forming parts of the circuits, and means controlled by said keys for moving said brushes into touch with said contacts, said means being adapted for moving said brushes over distances materially in excess of the lengths of the arcs traversed by the rear ends of said keys.

In testimony that we claim the foregoing invention, we have hereunto set our hands this 21st day of July, 1905.

MELVIN L. SEVERY.
GEORGE B. SINCLAIR.

Witnesses:
FRED G. TILTON,
A. B. UPHAM.