United States Patent [19]

Walters, II

[11] **Patent Number: Des. 312,450**

[45] **Date of Patent: ** Nov. 27, 1990**

[54] **PERSONAL LAPTOP COMPUTER**

[75] Inventor: **Charles F. Walters, II,** Houston, Tex.

[73] Assignee: **Compaq Computer Corporation,** Houston, Tex.

[**] Term: **14 Years**

[21] Appl. No.: **57,093**

[22] Filed: **May 29, 1987**

[52] **U.S. Cl.** **D14/106**

[58] **Field of Search** ..... D14/100-117; D18/1, 2, 6, 7, 11, 12; 340/700, 711; 364/708, 709, 710, 706, 705; 235/61 R, 61 A, 62 A, 62 B, 145 R, 146; 200/5 A; 341/22, 23; 150/52 R; 190/109; 206/526, 576; 400/691, 693; 312/208, 212

[56] **References Cited**

U.S. PATENT DOCUMENTS

D. 282,843	3/1986	Kurihara	D14/100
D. 284,474	7/1986	Sawada	D14/100
D. 290,256	6/1987	Sapper	D14/106
D. 299,031	12/1988	Sugano	D14/106
4,742,478	5/1988	Nigro, Jr. et al.	312/208 X
4,781,422	11/1988	Kimble	312/208 X

OTHER PUBLICATIONS

Byte Publications Inc., Sep. 1983—p. 81—Computers 1a and 1b, (top of page).

Datamation, Feb. 1984, p. 225—Sharp Desktop Computer.

Today's Office, Dec. 1983, p. 61, Micro Office Computer, top right of page.

Personal Computing, May 1987.

Personal Computing, Jul. 1987.

Primary Examiner—Susan J. Lucas

Assistant Examiner—Freda S. Nunn

[57] **CLAIM**

The ornamental design for a personal laptop computer, as shown and described.

DESCRIPTION

FIG. **1** is a top plan view of the personal laptop computer showing my new design with the screen and handle in the closed position;

FIGS. **2** and **3** are opposite side elevational views thereof;

FIGS. **4** and **5** are respectively front and rear elevational views thereof;

FIG. **6** is a bottom plan view thereof;

FIG. **7** is a side elevational view thereof with the screen in the closed position and the handle in the extended position;

FIG. **8** is a rear elevational view thereof;

FIG. **9** is a top, front perspective view thereof;

FIG. **10** is a top plan view thereof;

FIG. **11** is a bottom plan view thereof;

FIG. **12** is a side elevational view thereof with the screen in the opened viewing position and the handle in the extended position to support the computer;

FIG. **13** is a rear elevational view thereof;

FIG. **14** is a top, front perspective view of the computer in the position shown in FIG. **12;**

FIG. **15** is a side elevational view thereof with the screen in the open viewing position, the disk drives in the opened position and the handle in the extended position to support the computer;

FIG. **16** is a top, front perspective view thereof;

FIG. **17** is a top, rear perspective view thereof showing the screen opened, the handle in the extended position to support the computer and the back cover opened;

FIG. **18** is a top, rear perspective view thereof with the screen opened, the handle in the stowed position and the back cover closed.

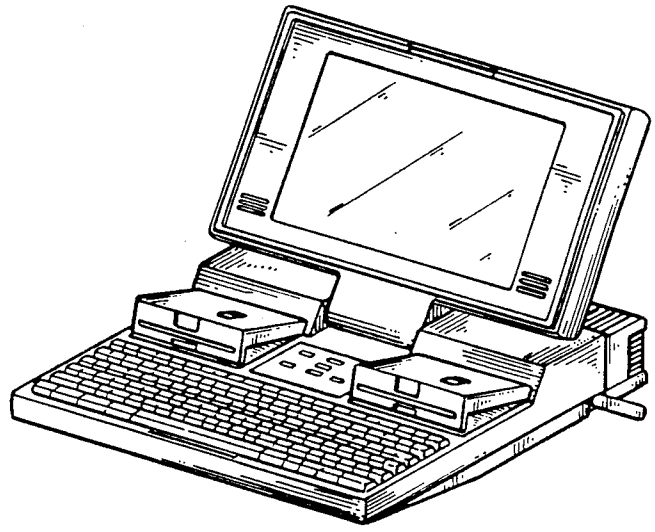

FIG.2



FIG.4



FIG.1

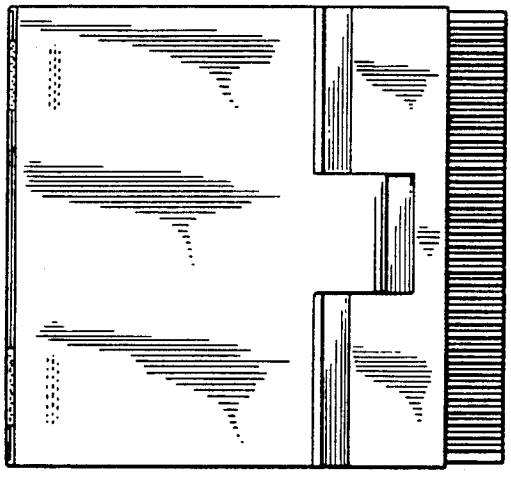



FIG.5

FIG.3

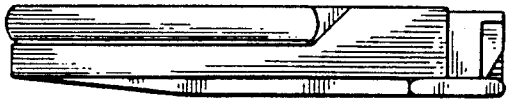

FIG.6

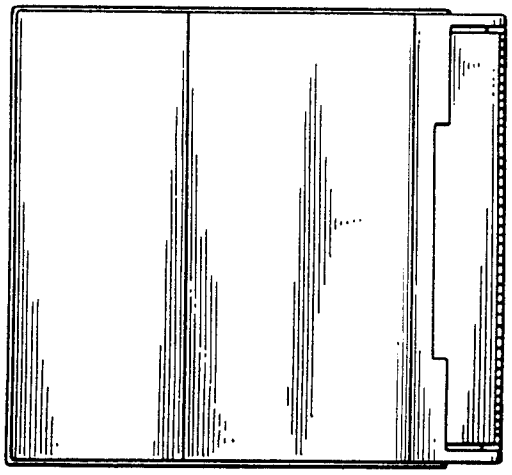

FIG.7



FIG.8

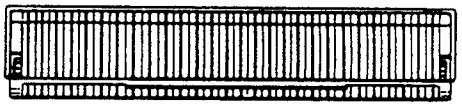

FIG.9

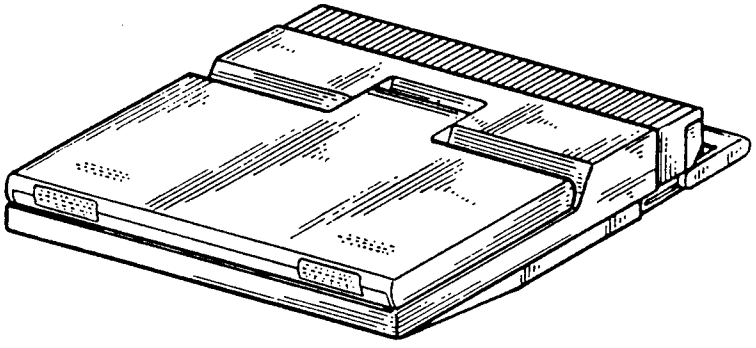

FIG.10

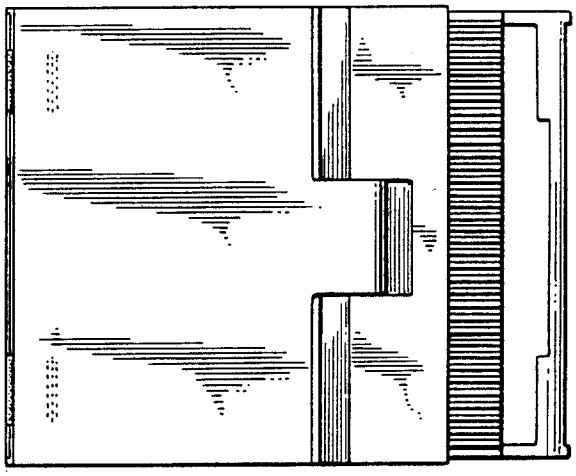

FIG.11

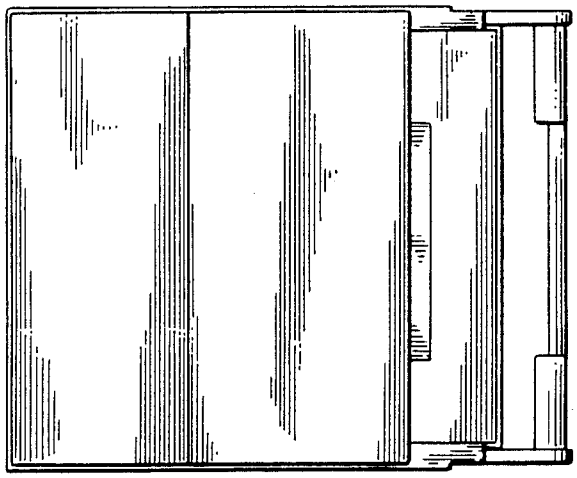

FIG.12

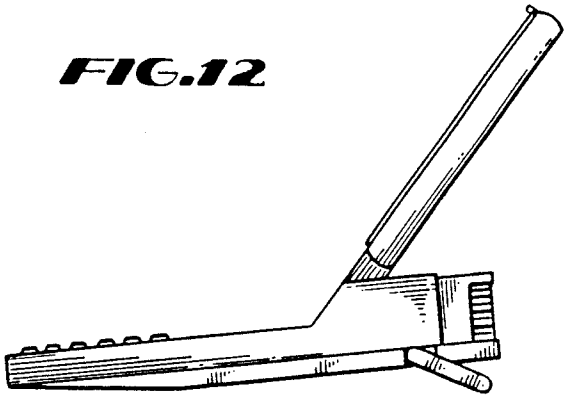

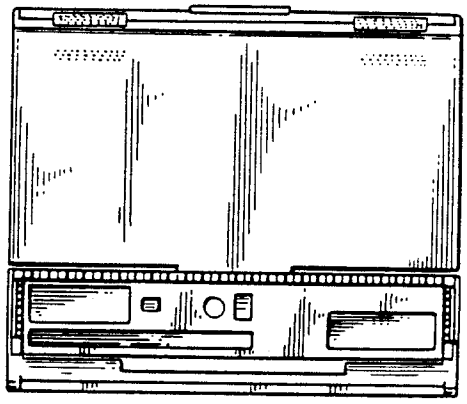

FIG.13

FIG.14

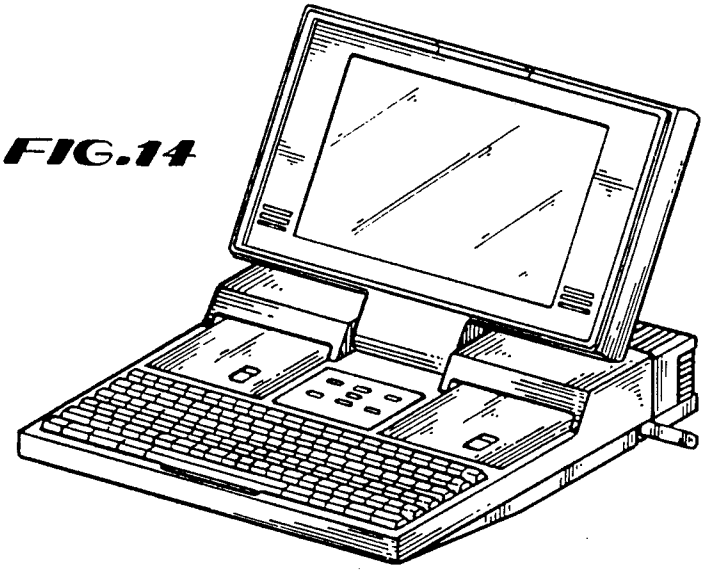

FIG.15

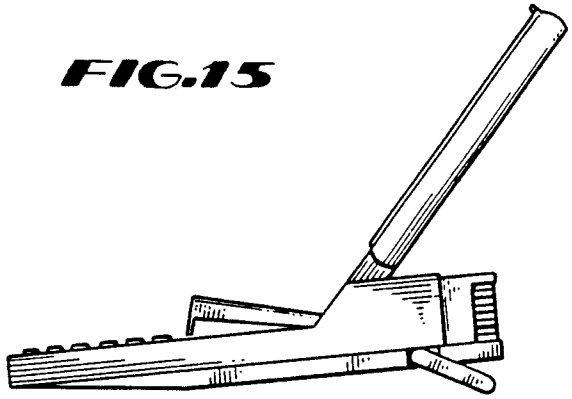

FIG.16

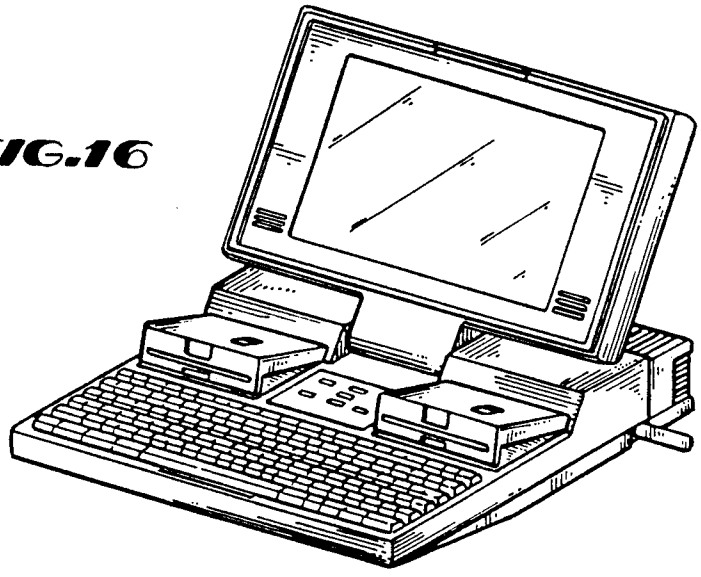

FIG.17

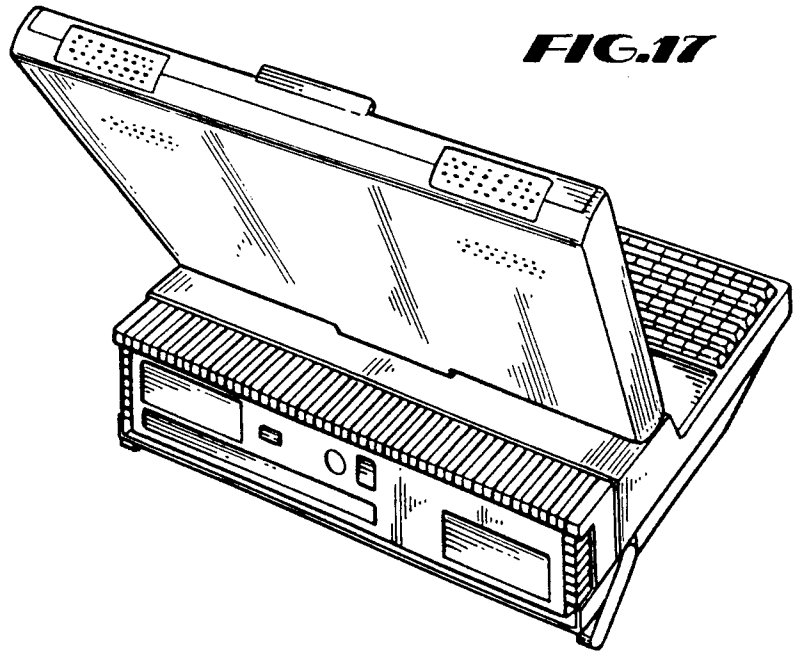

FIG.18

