(19) Europäisches Patentamt
European Patent Office
Office européen des brevets

(11) Publication number: **0 242 452**
A3

(12) EUROPEAN PATENT APPLICATION

(21) Application number: **86201409.9**

(51) Int. Cl.⁴: **B24B 9/14**

(22) Date of filing: **11.08.86**

(30) Priority: **23.04.86 IT 6734386**

(43) Date of publication of application:
28.10.87 Bulletin 87/44

(84) Designated Contracting States:
AT BE CH DE FR GB LI LU NL SE

(88) Date of deferred publication of the search report:
03.02.88 Bulletin 88/05

(71) Applicant: **BONOTTO s.n.c. di Bonotto Giovanni & C.**
Strada di Lanzo n. 430
I-10156 Turin(IT)

(72) Inventor: **Bonotto, Giovanni**
via Guilio, 11
I-10086 Rivarolo Canavese (Turin)(IT)

(74) Representative: **Robba, Eugenio**
Studio "INTERPATENT" via Caboto 35
I-10129 Turin(IT)

(54) Shaping apparatus for optical lenses.

(57) Apparatus for shaping optical lenses, constituted by an articulated frames (1) and a movable frame (9) pivotally connected to said articulated frame (1).

Two axial pins (11, 20) which operate coaxially are provided at the lower end of the movable frame. A rubber tab (14) and a suction cup element (19) act at the inner end of said pins and bear against the outer surfaces of a lens for locking it. An appropriate template (26) retained between an actuating means (24) and a sleeve (25) rotates with the outer edge against a rotatable pin (29) connected to a movable arm (30) to produce an oscillation of the movable frame (9) so as to permit a continuous and constant contact of the peripheral edge of the lens with the peripheral edge of the grinding wheel (28) and generate a lens equal or proportional to the profile of the template used.

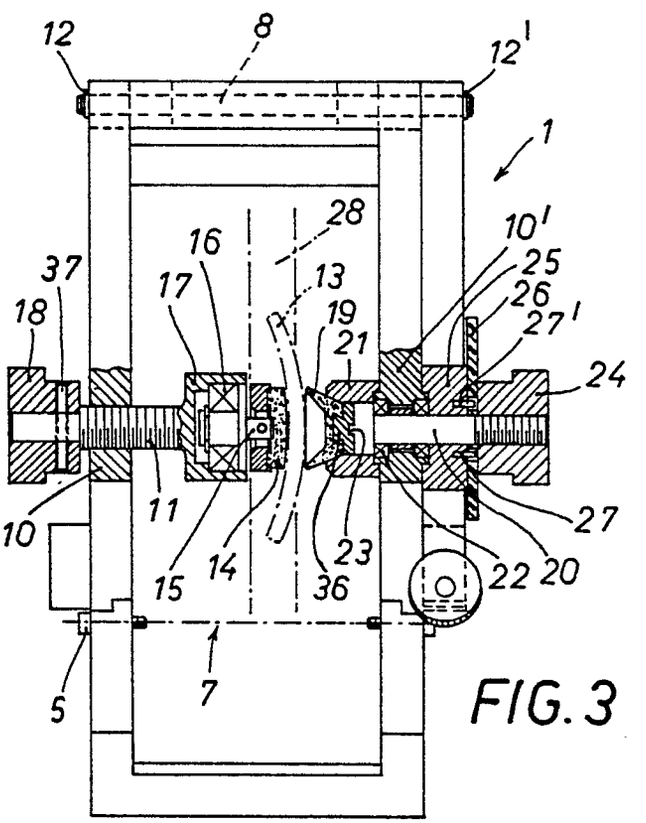

FIG. 3

EP 0 242 452 A3

European Patent Office

EUROPEAN SEARCH REPORT

Application Number

EP 86 20 1409

DOCUMENTS CONSIDERED TO BE RELEVANT

Category	Citation of document with indication, where appropriate, of relevant passages	Relevant to claim	CLASSIFICATION OF THE APPLICATION (Int. Cl.4)
A	FR-A- 629 590 (LA REALISATION MECANIQUE) * Page 5, lines 46-68; figure 10 *	1,2,5	B 24 B 9/14
A	US-A-1 610 638 (W.E. WHITE) * Figures; page 2, lines 95-122 *	1-3,5	
A	FR-A-1 055 475 (ATELIERS J.H.R.G.) * Figure *	1,4	
A	US-A-4 191 501 (SINKLIER et al.) * Figures *	1,6	
A	US-A-1 990 488 (A.J. HOLMAN)		
A	FR-A-1 152 867 (F. ROUGON et al.)		

TECHNICAL FIELDS SEARCHED (Int. Cl.4)

B 24 B

The present search report has been drawn up for all claims

Place of search	Date of completion of the search	Examiner
THE HAGUE	19-11-1987	ESCHBACH D.P.M.

CATEGORY OF CITED DOCUMENTS

X : particularly relevant if taken alone
Y : particularly relevant if combined with another document of the same category
A : technological background
O : non-written disclosure
P : intermediate document

T : theory or principle underlying the invention
E : earlier patent document, but published on, or after the filing date
D : document cited in the application
L : document cited for other reasons

& : member of the same patent family, corresponding document

EPO FORM 1503 03.82 (P0401)