Office de la Propriété Intellectuelle du Canada
Un organisme d'Industrie Canada

Canadian Intellectual Property Office
An agency of Industry Canada

CA 2787415 C 2016/03/22

(11)(21) 2 787 415

(12) BREVET CANADIEN
CANADIAN PATENT

(13) C

(86) Date de dépôt PCT/PCT Filing Date: 2011/01/28
(87) Date publication PCT/PCT Publication Date: 2011/08/04
(45) Date de délivrance/Issue Date: 2016/03/22
(85) Entrée phase nationale/National Entry: 2012/07/16
(86) N° demande PCT/PCT Application No.: US 2011/023023
(87) N° publication PCT/PCT Publication No.: 2011/094613
(30) Priorité/Priority: 2010/01/29 (US61/299,719)

(51) Cl.Int./Int.Cl. *A61C 19/06* (2006.01), *A61K 9/00* (2006.01), *A61K 9/70* (2006.01)

(72) Inventeurs/Inventors:
XU, GUOFENG, US;
VISCIO, DAVID B., US;
GAFFAR, ABDUL, US

(73) Propriétaire/Owner:
COLGATE-PALMOLIVE COMPANY, US

(74) Agent: SMART & BIGGAR

(54) Titre : BANDE DENTAIRE POUR ADMINISTRER UN TRAITEMENT BUCCAL
(54) Title: DENTAL STRIP FOR ADMINISTRATION OF ORAL TREATMENT

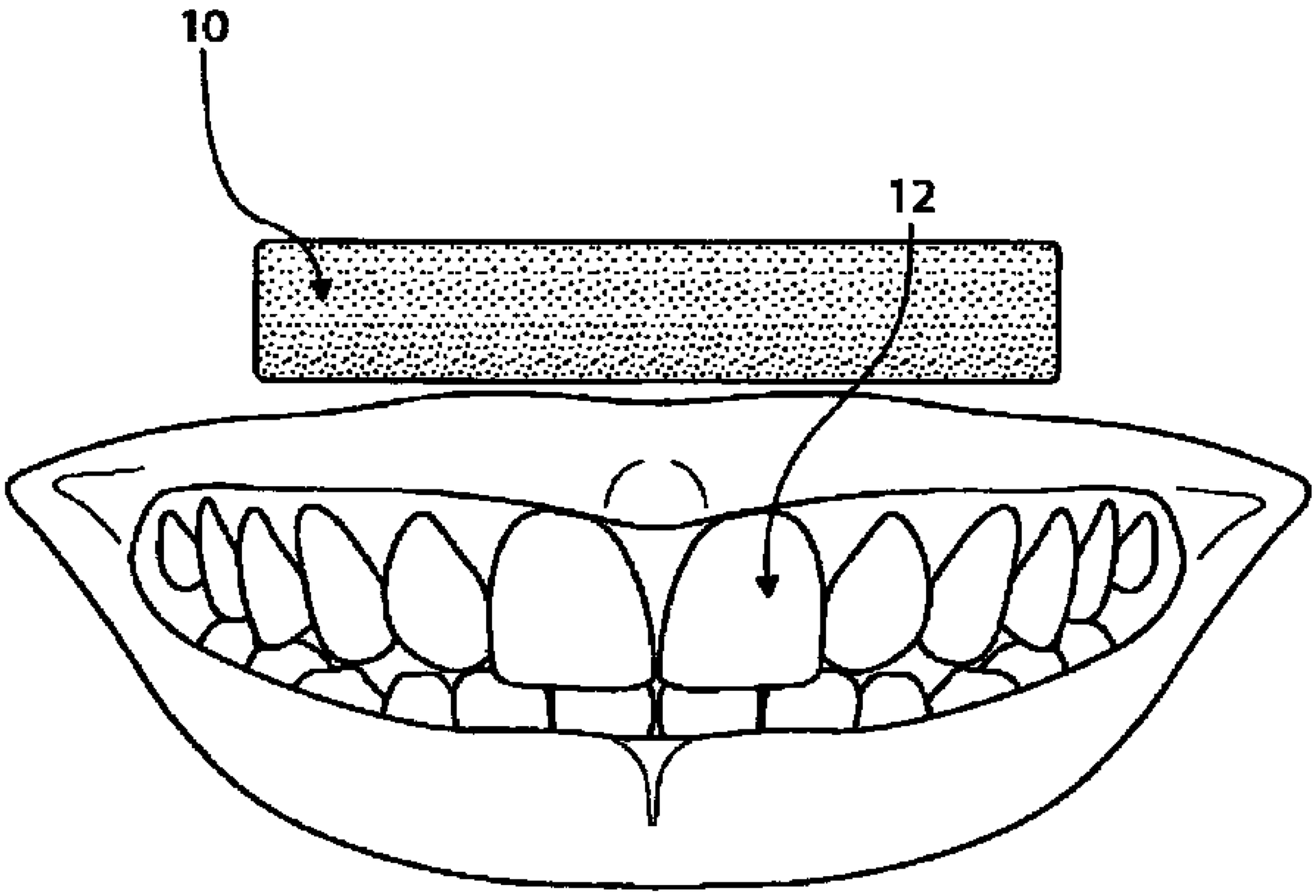

(57) Abrégé/Abstract:
Described herein, are dental strips comprising a film backing, and an adhesive layer, the adhesive layer comprising a water-swellable polymer and at least one active agent; and uses thereof.

(12) INTERNATIONAL APPLICATION PUBLISHED UNDER THE PATENT COOPERATION TREATY (PCT)

(19) World Intellectual Property Organization
International Bureau

(43) International Publication Date
4 August 2011 (04.08.2011)

PCT

(10) International Publication Number
WO 2011/094613 A1

(51) International Patent Classification:
A61C 19/06 (2006.01) *A61K 9/70* (2006.01)
A61K 9/00 (2006.01)

(21) International Application Number:
PCT/US2011/023023

(22) International Filing Date:
28 January 2011 (28.01.2011)

(25) Filing Language: English

(26) Publication Language: English

(30) Priority Data:
61/299,719 29 January 2010 (29.01.2010) US

(71) Applicant *(for all designated States except US)*: **COLGATE-PALMOLIVE COMPANY** [US/US]; 300 Park Avenue, New York, New York 10022 (US).

(72) Inventors; and
(75) Inventors/Applicants *(for US only)*: **XU, Guofeng** [US/US]; 40 Silvers Lane, Plainsboro, New Jersey 08536 (US). **VISCIO, David B.** [US/US]; 7937 E. Rusty Spur Trail, Prescott Valley, Arizona 86315 (US). **GAFFAR, Abdul** [US/US]; 89 Carter Road, Princeton, New Jersey 08540 (US).

(74) Agent: **HEBLE, Nikhil**; Colgate-Palmolive Company, Patent Department, 909 River Road, Piscataway, New Jersey 08855 (US).

(81) Designated States *(unless otherwise indicated, for every kind of national protection available)*: AE, AG, AL, AM, AO, AT, AU, AZ, BA, BB, BG, BH, BR, BW, BY, BZ, CA, CH, CL, CN, CO, CR, CU, CZ, DE, DK, DM, DO, DZ, EC, EE, EG, ES, FI, GB, GD, GE, GH, GM, GT, HN, HR, HU, ID, IL, IN, IS, JP, KE, KG, KM, KN, KP, KR, KZ, LA, LC, LK, LR, LS, LT, LU, LY, MA, MD, ME, MG, MK, MN, MW, MX, MY, MZ, NA, NG, NI, NO, NZ, OM, PE, PG, PH, PL, PT, RO, RS, RU, SC, SD, SE, SG, SK, SL, SM, ST, SV, SY, TH, TJ, TM, TN, TR, TT, TZ, UA, UG, US, UZ, VC, VN, ZA, ZM, ZW.

(84) Designated States *(unless otherwise indicated, for every kind of regional protection available)*: ARIPO (BW, GH, GM, KE, LR, LS, MW, MZ, NA, SD, SL, SZ, TZ, UG, ZM, ZW), Eurasian (AM, AZ, BY, KG, KZ, MD, RU, TJ, TM), European (AL, AT, BE, BG, CH, CY, CZ, DE, DK, EE, ES, FI, FR, GB, GR, HR, HU, IE, IS, IT, LT, LU, LV, MC, MK, MT, NL, NO, PL, PT, RO, RS, SE, SI, SK, SM, TR), OAPI (BF, BJ, CF, CG, CI, CM, GA, GN, GQ, GW, ML, MR, NE, SN, TD, TG).

[Continued on next page]

(54) Title: DENTAL STRIP FOR ADMINISTRATION OF ORAL TREATMENT

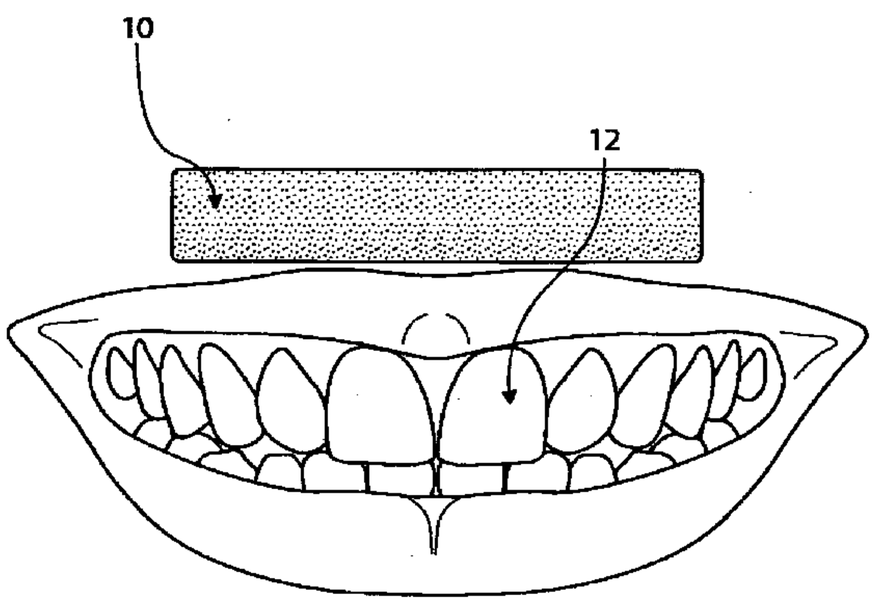

Figure 1

(57) Abstract: Described herein, are dental strips comprising a film backing, and an adhesive layer, the adhesive layer comprising a water-swellable polymer and at least one active agent; and uses thereof.

WO 2011/094613 A1

WO 2011/094613 A1

Published:

— *with international search report (Art. 21(3))*

— *before the expiration of the time limit for amending the claims and to be republished in the event of receipt of amendments (Rule 48.2(h))*

— *with information concerning incorporation by reference of missing parts and/or elements (Rule 20.6)*

62301-3182

DENTAL STRIP FOR ADMINISTRATION OF ORAL TREATMENT

[0001]

BACKGROUND

[0002] Sheet-like substrates for administration of oral treatments have been known for some time. A variety of advantages are achieved with such substrates, such as ease of handling, storage and packaging. One disadvantage of such substrates is that the application of the oral treatment is generally limited to the tooth surface, and does not infiltrate the areas between the teeth.

SUMMARY

[0003] In an aspect, there is provided a dental strip that includes a film backing, an adhesive layer on one surface of the film backing, the adhesive layer including a water-swellable polymer and at least one active agent, wherein the film backing is detachable from the adhesive layer.

[0004] In another aspect, there is provided a method of delivering an active agent to spaces between teeth in an oral cavity that includes applying a dental strip to teeth in which the dental strip includes a film backing, and an adhesive layer on one surface of the film backing, the adhesive layer including a water-swellable polymer and at least one active agent, wherein the film backing is detachable from the adhesive layer, solubilizing the adhesive layer by saliva present in the oral cavity, wherein the adhesive layer expands and infiltrates the spaces between the teeth thereby delivering the active agent.

[0005] In another aspect, there is provided a method of removing a substance from spaces between the teeth that includes applying a dental strip to teeth in which the dental strip includes a film backing, and an adhesive layer on one surface of the film backing, the adhesive layer including a water-swellable polymer and at least one active agent, wherein the film backing is detachable from the adhesive layer, solubilizing the adhesive layer by saliva present in the oral

cavity, wherein the adhesive layer expands and infiltrates the spaces between the teeth, and removing the dental strip from the teeth.

[0005a] According to still another aspect of the present invention, there is provided a dental strip for delivering at least one active agent to spaces between teeth in an oral cavity, the strip comprising: a film backing, and an adhesive layer on one surface of the film backing, the adhesive layer comprising a water-swellable polymer and the at least one active agent, wherein the film backing is detachable from the adhesive layer, wherein the water-swellable polymer is a hydrogel, and the hydrogel comprises a cross-linked carboxyvinyl copolymer, a cross-linked polyvinyl pyrrolidone, or a combination thereof.

BRIEF DESCRIPTION OF THE FIGURES

[0006] Fig. 1 shows a dental strip and teeth before application of the dental strip.

[0007] Fig. 2 shows teeth with a dental strip applied.

[0008] Fig. 3 shows removal of a dental strip from the teeth.

DETAILED DESCRIPTION

[0009] It should be understood that the detailed description and specific examples, while indicating embodiments of the invention, are intended for purposes of illustration only and are not intended to limit the scope of the invention.

[0010] The description and specific examples, while indicating embodiments of the invention, are intended for purposes of illustration only and are not intended to limit the scope of the invention. Moreover, recitation of multiple embodiments having stated features is not intended to exclude other embodiments having additional features, or other embodiments incorporating different combinations the stated of features. Specific Examples are provided for illustrative purposes of how to make and use the compositions and methods of this invention and, unless explicitly stated otherwise, are not intended to be a representation that given embodiments of this invention have, or have not, been made or tested.

62301-3182

[0011] As used herein, the term "about," when applied to the value for a parameter of a composition or method of this invention, indicates that the calculation or the measurement of the value allows some slight imprecision without having a substantial effect on the chemical or physical attributes of the composition or method. If, for some reason, the imprecision provided by "about" is not otherwise understood in the art with this ordinary meaning, then "about" as used herein indicates a possible variation of up to 5% in the value.

[0012] As referred to herein, all compositional percentages are by weight of the total composition, unless otherwise specified.

[0013] Some embodiments relate to a removable dental strip for administration of an oral treatment. In some embodiments, a dental strip comprises at least two layers, including a film

backing and an adhesive layer on one surface of the film backing. In some embodiments, the adhesive layer comprises a water-swellable polymer and at least one active agent, wherein the film backing is detachable from the adhesive layer. In other embodiments, the dental strips may be applied to teeth to administer an oral treatment such as delivering an active agent to spaces between the teeth and/or removing substances from areas between teeth.

[0014] In some embodiments, the film backing comprises a non-toxic material. Examples of suitable non-toxic substrates include, but are not limited to, textiles, cloth, wood composite, resin, elastomer, and paper. Suitable materials useful as a film backing in the embodiments are discussed in U.S. Patent App. 2002/0187112. Other materials suitable for film backing includes cellulose derivatives
such as ethyl cellulose and cellulose acetate, polyvinyl chloride, wax, Parafilms™, polyethylene, polyvinyl alcohol, Teflon™ and their derivatives.

[0015] In some embodiments, the film backing includes one or more ethylene oxide polymers. Ethylene oxide polymers useful for a film backing may include homopolymers. Ethylene oxide polymers useful for a film backing may also include mixtures of ethylene oxide polymers of varying molecular weight of about 10,000 Daltons to about 10,000,000 Daltons. In some embodiments ethylene oxide polymers useful for a film backing include mixtures of ethylene oxide polymers of varying average molecular weight of about 100,000 to about 1,500,000 Daltons. Such ethylene oxide polymers are commercially available from various sources. Poly(ethylene) oxide polymers having an average molecular weight range of 10,000 to 1,000,000 Daltons are available from the Dow Chemical Company under the tradename "Polyox." Suitable Polyox materials useful in forming the film backing are described in, for example, U.S. Patent Nos. 6,419,906, 6,503,486, 6,514,483.

[0016] In some embodiments, a film backing further includes one or more plasticizers. Examples of plasticizers useful for incorporation in a film backing include, but are not limited to, glycols such as propylene glycol, polyethylene glycol (PEG), polyhydric alcohols such as glycerin and sorbitol and glycerol esters such as glycerol triacetate. In some embodiments, the plasticizer is present at about 1 to about 30% by weight of the film. In other embodiments, the plasticizer is present at about 3 to about 20% by weight.

[0017] The ethylene oxide polymer film of the present invention may be prepared using conventional extrusion or solvent casting processes. For example, to prepare a film by solvent casting poly(ethylene) oxide, the ethylene oxide polymer or mixture of polymers may be dissolved in a sufficient amount of a solvent that is compatible with the polymer. In some embodiments, examples of suitable solvents include but are not limited to water, alcohols, acetone, ethyl acetate or mixtures thereof.

[0018] In embodiments that optionally include a plasticizer, after a solution of the polymer has been formed, a plasticizer is added with stirring, and heat is applied if necessary to aid dissolution until a clear and homogeneous solution of polymer and plasticizer has been formed. The solution may be coated onto a suitable carrier material and dried to form a film.

[0019] In some embodiments, the carrier material has a surface tension that allows the polymer solution to spread evenly across the intended carrier width without soaking in to form a destructive bond between the two substrates. Examples of suitable carrier materials include glass, stainless steel, teflon, polyethylene-impregnated kraft paper, and the like. In some embodiments, the film is dried. In some embodiments, the film is coated with an adhesive layer. In some embodiments the film is cut into pieces of suitable size and shape.

[0020] In some embodiments, the film backing has a thickness of about 20 to about 1500 μm, preferably a thickness of about 30 to about 1000μm. The film backing has a length of about 2 to about 20 cm, preferably a length of about 4 to about 14 cm. The film backing has a width of about 1 to about 6 cm, preferably a length of about 2 to about 4 cm.

[0021] In some embodiments, an adhesive layer is applied to one surface of the film backing. In some embodiments, the adhesive layer is coated onto the film backing. In some embodiments the adhesive layer is hydratable. In some embodiments, the adhesive layer includes a water-swellable polymer and/or at least one active agent.

[0022] In some embodiments, the adhesive layer may exhibit tackiness, or an adhesive quality, prior to coming in contact with water or saliva. In other embodiments, the adhesive layer exhibits increased tackiness or adhesive quality upon coming in contact with water or saliva. In some embodiments, the adhesive layer includes a water-swellable polymer. In some embodiments, the adhesive layer includes an active agent. In some embodiments, the adhesive layer includes suitable additives such as flavorants, colorants, and/or preservatives.

62301-3182

[0023] In some embodiments, the adhesive layer includes or has a substantial portion of swelling agents. Suitable swelling agents include, for example, those known as absorbent polymers in sanitary products, such as diapers, panty liners, in feminine hygiene, and the like, and are known as superabsorbent polymers. Such swellable substances absorb aqueous liquids and spontaneously combine with them to form a relatively stable gel. They are capable of absorbing and permanently retaining many times their weight of aqueous liquids. The resultant gel has chain-like molecules linked into a three-dimensional network and embedded in a liquid medium.

[0024] Examples of water-swellable polymer useful for an adhesive layer are described in U.S. Patent 6,153,222.

In some embodiments, the water-swellable polymer includes a hydrogel. In some embodiments, the hydrogel includes cross-linked carboxyvinyl copolymers and/or cross-linked polyvinyl pyrrolidones. Other materials suitable for the adhesive layers include polyethylene oxide (also known as Polyox), carboxymethyl cellulose, hydroxypropyl cellulose, hydroxypropyl methyl cellulose, polyacrylic acid and its derivatives, Carbopol, polyvinyl alcohol and alginate. The weight of the adhesive materials can range from about 1mg to 20 gm, preferably from about 20 mg to 5 gm.

[0025] In some embodiments, the water-swellable polymer expands on contact with water or saliva and assumes several times its original volume. In some embodiments, the polymer includes substances that are effervescent on contact with water or saliva. Such substances may be sodium bicarbonate, and citric or ascorbic acid, or other physiologically acceptable acids. If these foams are used, rapid disintegration of the adhesive layer, which is desirable in some cases, may selectively be further accelerated by the developing increase in volume of the water-swellable polymer.

[0026] In some embodiments, the adhesive layer and/or water-swellable polymer that may be incorporated into the adhesive layer is impregnated with one or more active agents. In other embodiments, the adhesive layer and/or water-swellable polymer is coated with one or more active agents.

[0027] In some embodiments, the adhesive layer may include one or more active agents that prevent, treat and/or reduce the symptoms related to various oral or systemic diseases or

conditions. Useful active agents include all those known or developed in the art including steroids, NSAIDs, a fluoride ion source, polycarboxylate polymers, polyvinyl methyl ether/maleic anhydride (PVME/MA) copolymers, an arginine ester, a zinc ion source, (e.g., zinc citrate, zinc oxide, zinc sulfate, and the like), a stannous ion source, delmopinol, tartar control agents, an antibacterial agent, triclosan and salts thereof, chlorhexidine, alexidine, hexetidine, sanguinarine, benzalkonium chloride, salicylanilide, domiphen bromide, cetylpyridinium chloride (CPC), tetradecylpyridinium chloride (TPC), N-tetradecyl-4-ethylpyridinium chloride (TDEPC), octenidine, octapinol, nisin, a copper ion source, an essential oil, a furanone, anti-inflammatory agents, anti-plaque agents, antioxidants, and bacteriocins, and salts thereof, honokiol, vitamins, anti-attachment agents, proteinaceous agents, peptides, and the like.

[0028] Active agents may include plaque-reducing agents, such as enzymes and non-enzyme proteins. Examples of plaque-reducing enzymes include papain, krillase, and glucoamylase. Examples of plaque-reducing non-enzyme proteins include milk protein. In some embodiments, the active agent includes silica.

[0029] In some embodiments, the film backing is detachable from the adhesive layer. In some embodiments, the film backing may be detachable from the adhesive layer before, during, or after the administration of an oral treatment. In some embodiments, the film backing is detachable from the adhesive layer upon application of pressure to the film backing. For example, pressure may be applied to the film backing by one's fingers when the dental strip is applied to the teeth.

[0030] In some embodiments, the dental strip may be applied to the teeth for administration of an oral treatment. In some embodiments, the oral treatment involves delivery of an active agent to the teeth and to the spaces between the teeth. In some embodiments, the active agent inhibits bacterial growth in the interdental space. In some embodiments, the oral treatment involves removal of substances from the teeth and the spaces between the teeth.

[0031] The dental strips may be applied to the teeth for administration of an oral treatment. In some embodiments, the oral treatment involves delivery of an active agent to the teeth and to the spaces between the teeth. In some embodiments, the oral treatment involves removal of substances from the teeth and the spaces between the teeth.

[0032] Figure 1 shows dental strip 10 and teeth 12 before application of dental strip 10 to

teeth 12. Dental strip 10 may be applied to teeth 12 with the adhesive layer between teeth 12 and the film backing, as shown in Figure 2. In some embodiments, pressure may be applied to push dental strip 10 against teeth 12. In some embodiments, pressure applied to dental strip 10 may cause the adhesive layer to infiltrate the spaces between teeth 12. In some embodiments, such pressure may detach the film backing from all or part of the adhesive layer.

[0033] In some embodiments, saliva present in the oral cavity solubilizes the adhesive layer. Upon contact with the saliva, the adhesive layer, which optionally includes a water-swellable polymer, may expand. In some embodiments, the adhesive layer will expand and infiltrate the spaces between teeth 12. In some embodiments, active agents are delivered to the spaces between teeth 12 from the adhesive layer. In some embodiments, the film backing detaches from all or part of the adhesive layer upon expansion of the adhesive layer.

[0034] In some embodiments, the active agent removes substances from teeth 12 and the spaces between teeth 12. Such substances may include, for example, plaque, bacteria, or food particles. In some embodiments, the active agent dissolves the substance. In some embodiments, the active agent loosens the substance. In some embodiments, the active agent attaches to the substance and reduces its adherence to the teeth and surrounding tissue. In this embodiment, the substance (and active agent attached thereto), can then be removed by, for example, rinsing or brushing.

[0035] Dental strip 10 may be left on teeth 12 for an amount of time necessary to achieve the intended results of the oral treatment. As shown in Figure 3, dental strip 10 may then be removed from teeth 12. In some embodiments, the film backing and the adhesive layer remain attached to each other upon removal of dental strip 10. The substances may be removed from teeth 12 and the spaces between teeth 12 upon removal of dental strip 10.

[0036] In some embodiments, the film backing may be detached from all or part of the adhesive layer upon attachment of the adhesive layer to teeth 12. In some embodiments, the adhesive layer remains on teeth 12 and in the spaces between teeth 12 after removal of the film backing. The active agent may continue to remove substances from teeth 12 and the spaces between teeth 12 after the film backing is removed. In some embodiments, the adhesive layer and optional water-swellable polymer(s) and active agent(s) and any substances that may be adhered to the adhesive material of the adhesive layer may be removed from teeth 12 and the

spaces between teeth 12 by mechanical abrasion upon removal of the film backing.

62301-3182

CLAIMS:

1. A dental strip for delivering at least one active agent to spaces between teeth in an oral cavity, the strip comprising:

a film backing, and

an adhesive layer on one surface of the film backing, the adhesive layer comprising a water-swellable polymer and the at least one active agent,

wherein the film backing is detachable from the adhesive layer,

wherein the water-swellable polymer is a hydrogel, and the hydrogel comprises a cross-linked carboxyvinyl copolymer, a cross-linked polyvinyl pyrrolidone, or a combination thereof.

2. The dental strip of claim 1, wherein the at least one active agent comprises a plaque-reducing agent.

3. The dental strip of any one of claims 1-2, wherein the plaque-reducing agent comprises an enzyme.

4. The dental strip of any one of claims 1-3, wherein the enzyme comprises at least one member selected from the group consisting of papain, krillase, and glucoamylase.

5. The dental strip of any one of claims 2-4, wherein the plaque-reducing agent comprises a non-enzyme protein.

6. The dental strip of claim 5, wherein the non-enzyme protein comprises milk protein.

7. The dental strip of any one of claims 1-6, wherein the active agent comprises silica.

62301-3182

8. The dental strip of any one of claims 1-7, wherein the active agent comprises at least one member selected from the group consisting of triclosan, chlorhexidine, alexidine, hexetidine, sanguinarine, benzalkonium chloride, salicylanilide, domiphen bromide, cetylpyridinium chloride (CPC), tetradecylpyridinium chloride (TPC), N-tetradecyl-4-ethylpyridinium chloride (TDEPC), octenidine, octapinol, nisin, a zinc ion source, a copper ion source, an essential oil, a furanone, an enzyme, a peptide, a protein, a bacteriocin and salts thereof, and honokiol.

9. The dental strip of any one of claims 1-8, wherein the film backing comprises a nontoxic substrate.

10. The dental strip of any one of claims 1-9, wherein the film backing comprises at least one member selected from the group consisting of textiles, cloth, wood composite, resin, elastomer, and paper.

11. The dental strip of any one of claims 1-10, wherein the film backing comprises an ethylene oxide polymer.

12. The dental strip of any one of claims 1-11, wherein the film backing comprises homopolymers.

13. The dental strip of any one of claims 1-12, wherein the film backing comprises a mixture of ethylene oxide polymers of varying molecular weight of about 10,000 Daltons to about 10,000,000 Daltons.

14. The dental strip of any one of claims 1-13, wherein the film backing comprises a mixture of ethylene oxide polymers of varying molecular weight of about 100,000 Daltons to about 1,500,000 Daltons.

15. The dental strip of any one of claims 1-14, wherein the film backing is detachable from the adhesive layer before an oral treatment.

16. The dental strip of any one of claims 1-14, wherein the film backing is detachable from the adhesive layer during an oral treatment.

62301-3182

17. The dental strip of any one of claims 1-14, wherein the film backing is detachable from the adhesive layer after an oral treatment.

18. The dental strip of any one of claims 1-17, wherein the film backing is detachable from the adhesive layer upon application of pressure to the film backing.

19. The dental strip of any one of claims 1-18, wherein the film backing has a thickness of about 20 to 1500 μm.

20. The dental strip of any one of claims 1-19, wherein upon application of the dental strip to teeth in an oral cavity, the adhesive layer is solubilized by saliva present in the oral cavity.

21. The dental strip of any one of claims 1-20, wherein upon solubilization of the adhesive layer, the active agent is delivered to the teeth and to spaces between the teeth.

22. The dental strip of any one of claims 1-21, wherein a substance is removed from spaces between the teeth upon removal of the film from the teeth.

23. The dental strip of any one of claims 1-22, wherein the substance comprises plaque.

24. The dental strip of any one of claims 1-22, wherein the substance comprises bacteria.

25. The dental strip of any one of claims 1-22, wherein the substance comprises food particles.

26. Use of the dental strip according to any one of claims 1 to 25, for removing a substance from spaces between teeth in oral cavity.

27. The use of claim 26, wherein one of the at least one active agent is for eliminating the substance.

62301-3182

28. The use claim 26, wherein one of the at least one active agent is for dissolving the substance.

29. The use of claim 26, wherein one of the at least active agent is for attaching to the substance and reducing its adherence to the teeth and surrounding tissue.

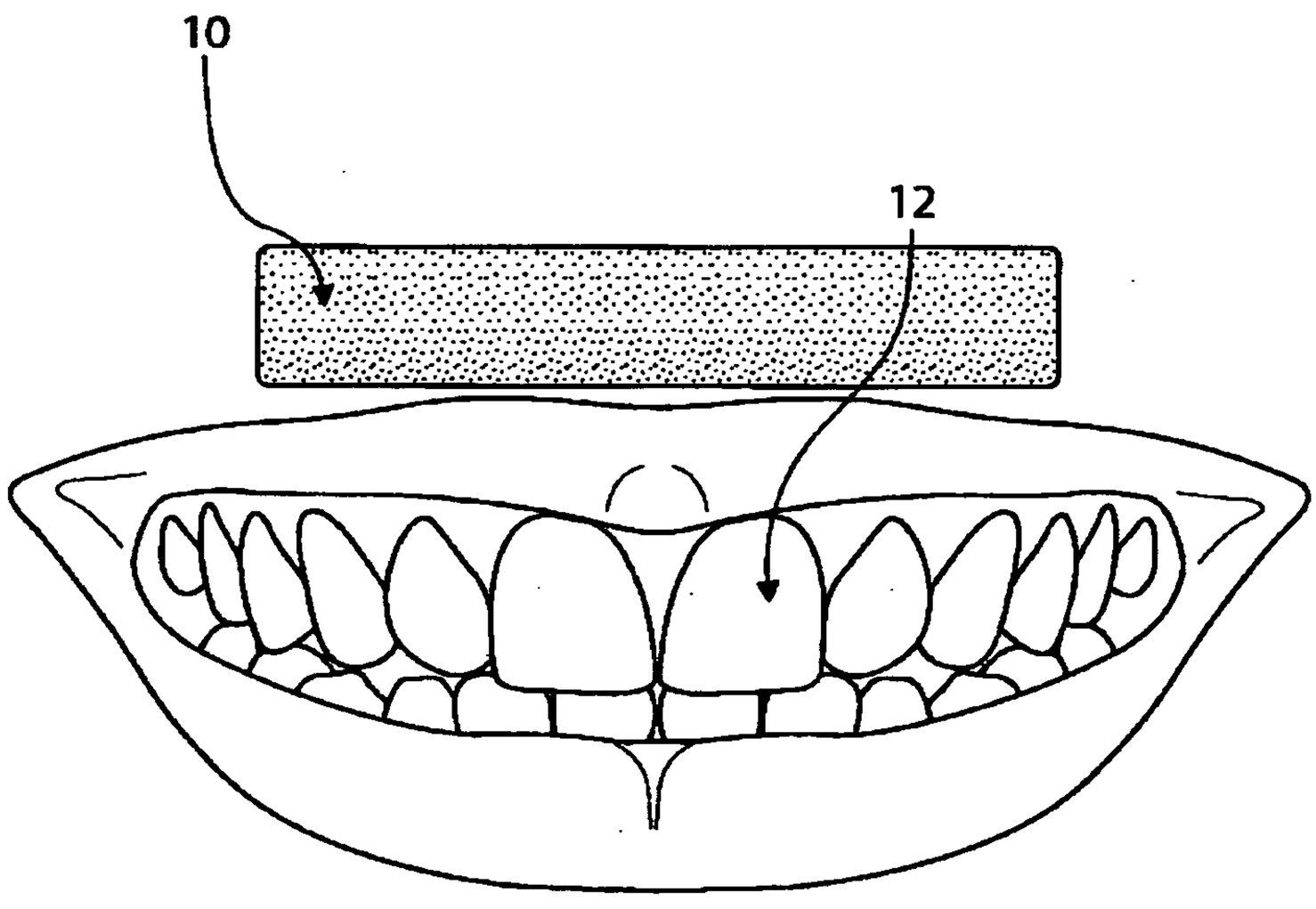

Figure 1

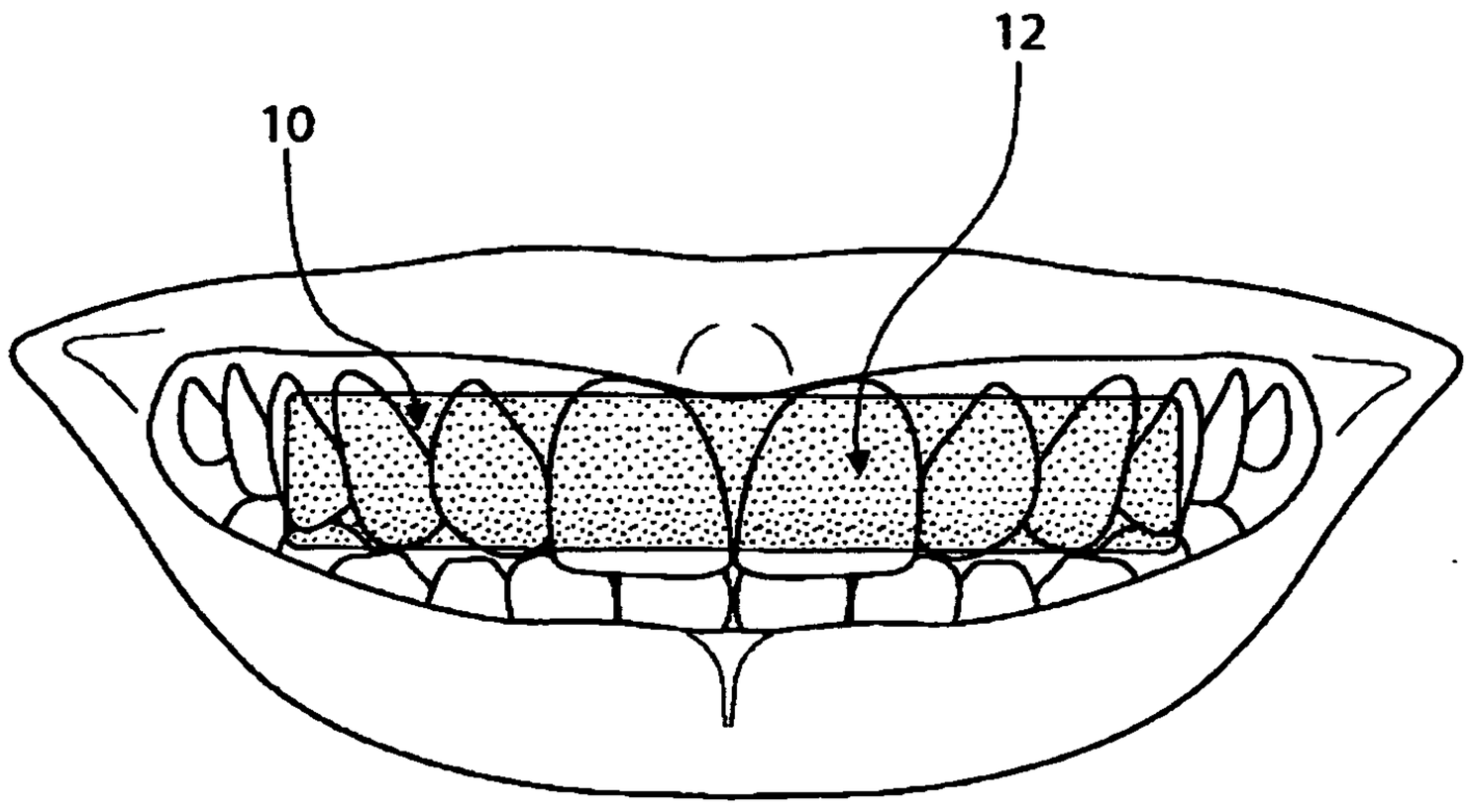

Figure 2

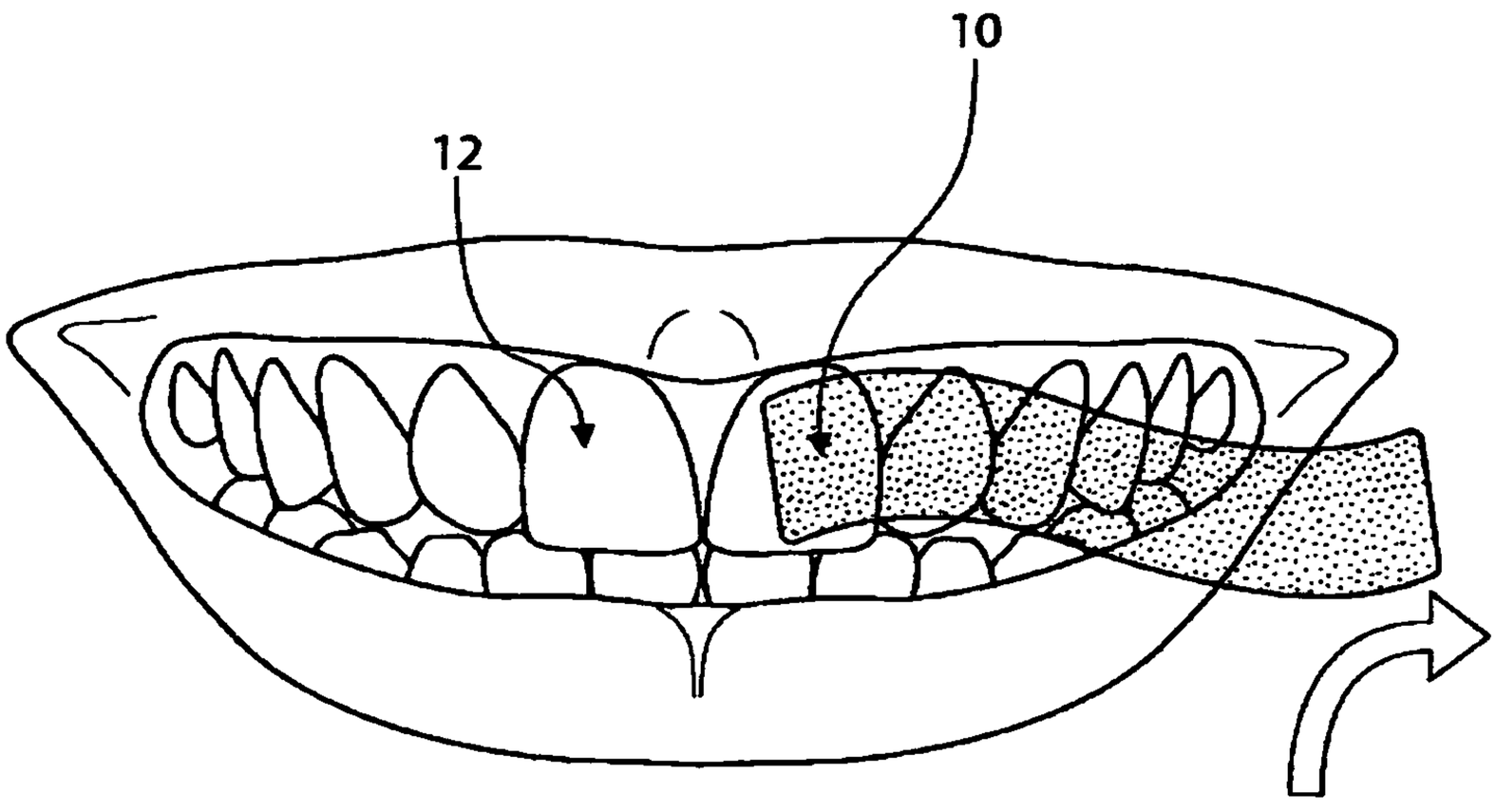

Figure 3

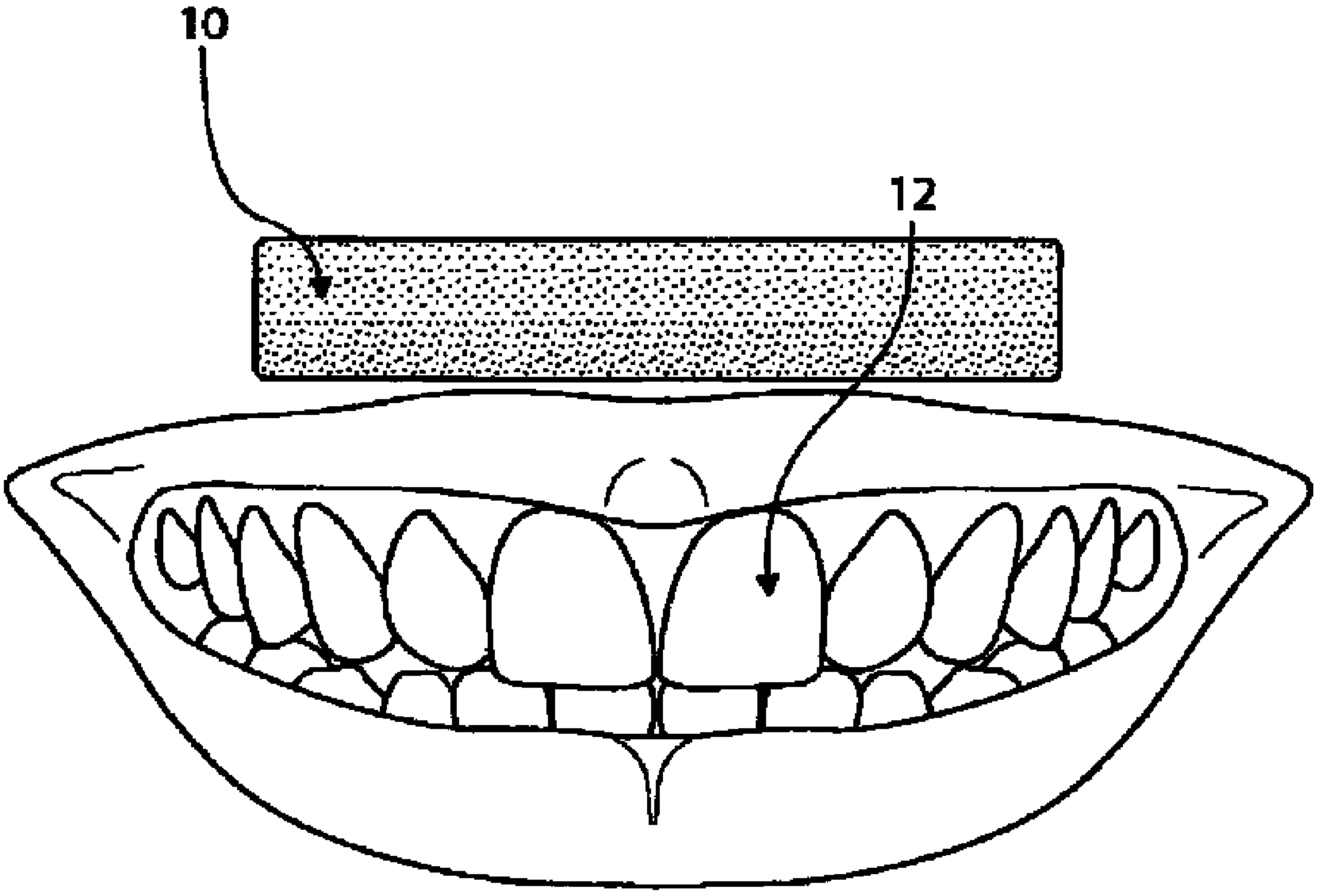
10
12