Oct. 24, 1944. P. A. WYEN 2,360,999

PORTABLE SCAFFOLD STRUCTURE

Filed April 8, 1943 2 Sheets-Sheet 1

FIG. 1

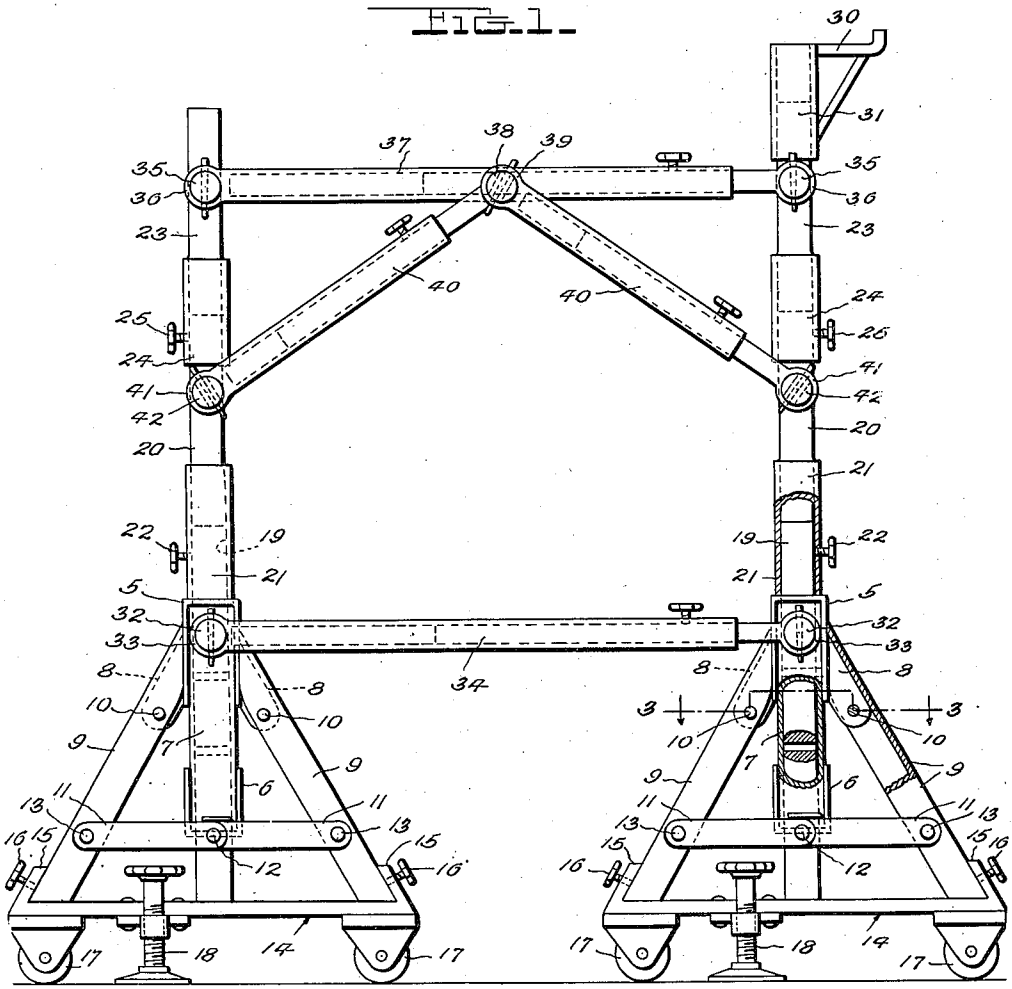

FIG. 2

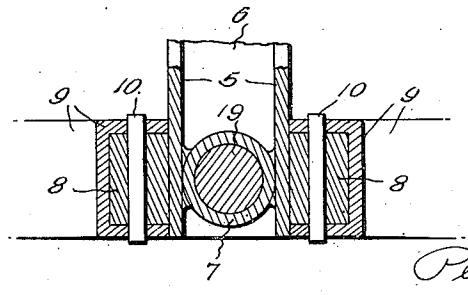

Inventor

Peter A. Wyen

By

Mann, Porter & Diller

Attorneys

Oct. 24, 1944. P. A. WYEN 2,360,999

PORTABLE SCAFFOLD STRUCTURE

Filed April 8, 1943 2 Sheets-Sheet 2

FIG. 2

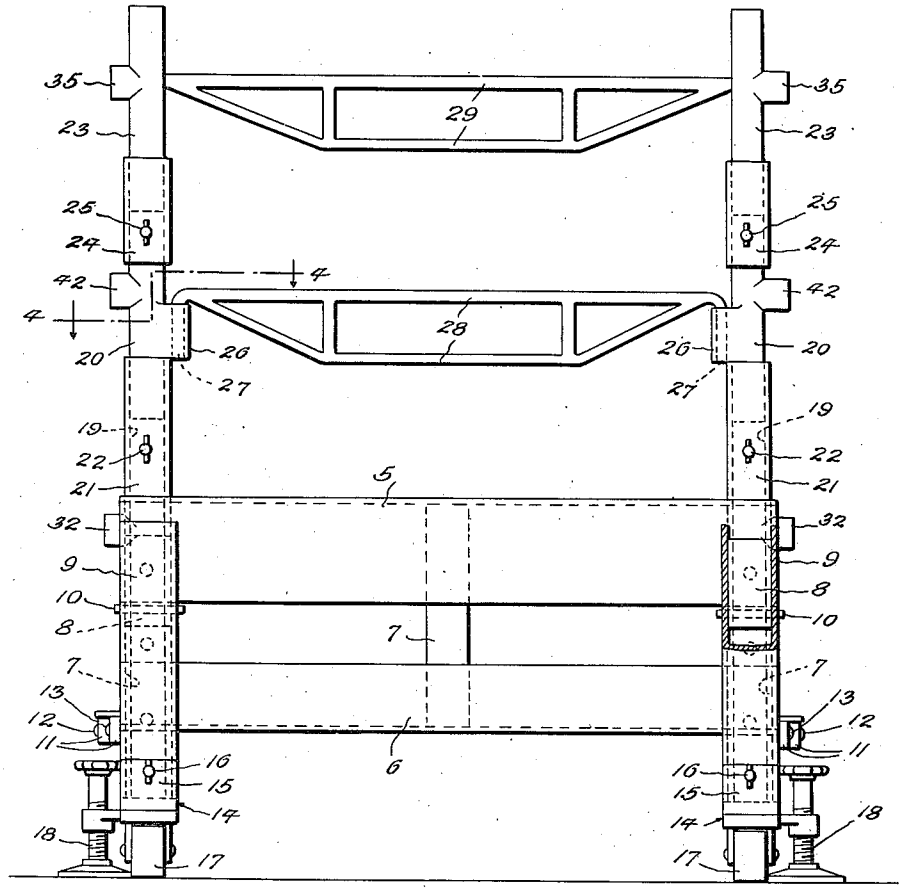

FIG. 4

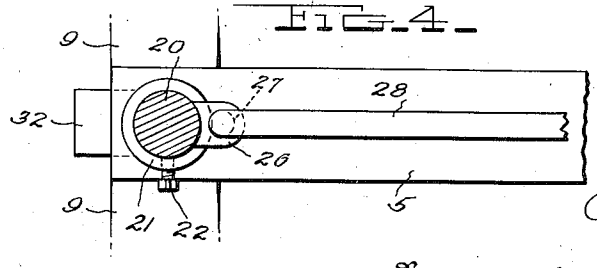

Inventor

Peter A. Wyen

By Mason, Porter & Miller

Attorneys

Patented Oct. 24, 1944

2,360,999

UNITED STATES PATENT OFFICE

2,360,999

PORTABLE SCAFFOLD STRUCTURE

Peter A. Wyen, Minster, Ohio

Application April 8, 1943, Serial No. 482,294

7 Claims. (Cl. 304—9)

The invention relates generally to scaffolds and primarily seeks to provide a novel form of scaffold which can be moved about from place to place with great facility, and which can be readily adjusted as to length and height and collapsed for convenient storage or shipment.

An object of the invention is to provide a scaffold structure of the character stated including a demountable, roller supported cradle equipment which facilitates movement about of the scaffold structure, and suitable jack equipments by which the weight of the scaffolding can be eased off said rollers so as to fix the scaffolding in a selected position for use.

Another object of the invention is to provide in a scaffold structure of the character stated, novel collapsible base structure.

Another object of the invention is to provide a scaffolding structure of the character stated in which is included novel telescopically adjustable distance pieces and brace elements.

Another object of the invention is to provide a scaffolding structure of the character stated in which there is included a novel swingably mounted lift support arm.

With the above and other objects in view that will hereinafter appear, the nature of the invention will be more fully understood by following the detailed description, the appended claims and the several views illustrated in the accompanying drawings.

In the drawings:

Figure 1 is a side elevation illustrating the invention.

Figure 2 is an end elevation.

Figure 3 is a detail horizontal sectional view taken on the line 3—3 on Figure 1.

Figure 4 is a detail horizontal sectional view taken on the line 4—4 on Figure 2.

The improved scaffolding structure comprising the invention includes two identical end units which are connected by adjustable distance pieces and adjustable braces in the formation of complete scaffolding structure, and it will suffice to describe one of said units in detail.

Each end unit comprises a main upper inverted U-shaped trestle piece 5 and a lower U-shaped trestle piece 6, the two pieces 5 and 6 being connected by suitable uprights 7.

The main trestle piece 5 is provided with a hinge ear 8 projecting from each side at each end thereof in the manner clearly illustrated in Figures 1 and 2, and to each ear 8 a supporting leg 9 is pivotally connected at its upper end as at 10. By reason of the pivotal connection of the legs 9 they can be folded flat-wise against the lower trestle piece 6 for convenience in storing or shipping the structure. When the scaffolding is in use the sets of legs 9 are normally held in the operative, spread relation illustrated in Figure 1 by collapsible brace links 11 which are centrally pivoted together as at 12 and individually pivoted at their outer ends to the respective legs as at 13.

When locked in their operative, spread condition illustrated in Figure 1, the legs of each set are mounted in a cradle 14, the upstanding end bars of which are clamped to the lower ends of the spread legs by clamp screws. Each cradle 14 is supported on rollers 17 to facilitate moving of the scaffolding about from place to place, and each cradle is provided with one or more jack screws 18 which may be manipulated to engage the ground and ease off the weight supported on the cradle so as to secure the scaffolding against free movement when it is placed in the desired position of use.

A standard 19 projects upwardly from each end of each trestle equipment 5, 6 and serves as a mounting or support for an upwardly projecting, aligned standard 20 having a socket sleeve 21 secured to its lower end for removably telescoping over the upper extremity of the respective standard 19 in the manner clearly illustrated in Figures 1 and 2. Each extension standard 20, 21 is secured in position on the respective mounting standard 19 by a clamp screw 22.

Additional upward extension or standard pieces 23 may be provided, one thereof being adapted to align with and extend upwardly from each standard piece 20, the additional standard pieces also being provided with socket sleeve extensions 24 for receiving the upper ends of the standard pieces 21 and being secured thereon by clamp screws 25.

The socket sleeves 21 of each unit may also be provided with socket sleeve extensions 26 for removably receiving the downwardly bent ends 27 of a truss cross arm or platform support 28 in the manner clearly illustrated in Figure 2 of the drawings.

The standard pieces 23 of each unit also may be carried by a truss cross arm or platform support 29 in the manner clearly illustrated in Figure 2.

It will be observed by reference to Figure 1 of the drawings that one or more of the upper standard pieces 23 may be employed to support one or more swingably mounted support arms 30, each said support arm equipment including a

depending socket sleeve 31 for swingably and removably embracing the upper end extremity of one or more of the standard pieces 23.

The base end standards or uprights 7 of the respective units are equipped with bosses 32 to which are attached the ends 33 of telescopic distance pieces 34. The upper standard pieces 23 also are equipped with bosses 35 to which the ends 36 of telescopic distance pieces 37 are attached, and each telescopic distance piece 37 is equipped with a boss to which the ends 39 of telescopic brace pieces 40 are attached. The other ends of the brace pieces 40 are attached to bosses 42 provided on the standard pieces 20.

In the use of the scaffolding equipment the supporting legs 9 of the respective units are spread in the manner clearly illustrated in Figure 1 and secured on the cradles 19. The proper number of uprights or standards 20, 23 are assembled in the manner illustrated in Figures 1 and 2, and if one or more of the swingable lift supporting arms 30 is to be used, suitable mounting thereof is effected on the selected upper standard or standards 23. The units may be conveniently moved about on their roller supports to bring said units into proper parallel spaced relation and then the transverse distance pieces 34, 37 and the brace pieces 40 are suitably mounted in the manner clearly illustrated in Figure 1. The desired platform equipment can then be placed on the supports 28 and 29 and the completely assembled scaffolding structure can be conveniently moved into the position in which it is to be used. After the equipment is thus placed the jack screws 18 can be manipulated to ease the rollers 27 off the floor to a sufficient degree to transfer the load onto the jack screws so that the scaffolding equipment will be securely held in place against free rolling movement.

It is of course to be understood that the details of structure and the arrangement of parts may be variously changed and modified without departing from the spirit and scope of the invention.

I claim:

1. A scaffold structure unit comprising a rigid transverse base unit, a standard upstanding from each end of the base unit, platform supporting means connected across between said standards, a spreadable leg set for supporting each end of the base unit, means pivotally connecting the legs of each set to the base unit so that they can be spread apart into operative supporting relation or collapsed into close parallel inactive relation, and link means for holding the legs in operative spread relation and foldable to permit collapsing of the legs.

2. A scaffold structure unit as defined in claim 1 in which each said standard includes a plurality of telescopically mounted unit sections.

3. A scaffold structure unit as defined in claim 1 in which each set of supporting legs when spread are secured in a roller supported cradle for facilitating movement about of the scaffold structure.

4. A scaffold structure unit as defined in claim 1 in which each set of supporting legs when spread are secured in a roller supported cradle for facilitating movement about of the scaffold structure, and a screw jack mounted on at least one cradle and engageable with the floor for transferring load from the respective cradle rollers to the floor to secure the unit against free rolling movement.

5. In a floor supported scaffolding structure, two parallel spaced rigid base units, each said unit comprising a transverse base unit, a standard upstanding from each end of the base unit, platform supporting means connected across between said standards, a spreadable leg set for supporting each end of each base unit, means pivotally connecting the legs of each set to the respective base unit so that they can be spread apart into operative supporting relation or collapsed into close parallel inactive relation, and link means for holding the legs of each set in operative spread relation and foldable to permit collapsing of the legs, adjustable distance pieces extending across between standards of the spaced units and connecting the spaced units, and adjustable brace means connected to the distance pieces and the standards for supporting said distance pieces intermediately of the ends thereof.

6. In a floor supported scaffolding structure, two parallel spaced base units, each said unit comprising a transverse base unit, a standard upstanding from each end of the base unit, platform supporting means connected across between said standards, a spreadable leg set for supporting each end of the base unit, means pivotally connecting the legs of each set to the base unit so that they can be spread apart into operative supporting relation or collapsed into close parallel inactive relation, and link means for holding the legs in operative spread relation and foldable to permit collapsing of the legs, adjustable distance pieces extending across between standards of the spaced units and connecting the spaced units, and adjustable brace means connected to the distance pieces and the standards for supporting said distance pieces intermediately of the ends thereof, the sets of supporting legs of each unit each being secured in a roller supported cradle for facilitating movement about of the scaffolding structure.

7. In a floor supported scaffolding structure, two parallel spaced base units, each said unit comprising a transverse base unit, a standard upstanding from each end of the base unit, platform supporting means connected across between said standards, a spreadable leg set for supporting each end of the base unit, means pivotally connecting the legs of each set to the base unit so that they can be spread apart into operative supporting relation or collapsed into close parallel inactive relation, and link means for holding the legs in operative spread relation and foldable to permit collapsing of the legs, adjustable distance pieces extending across between standards of the spaced units and connecting the spaced units, and adjustable brace means connected to the distance pieces and the standards for supporting said distance pieces intermediately of the ends thereof, the sets of supporting legs of each unit each being secured in a roller supported cradle for facilitating movement about of the scaffolding structure, and screw jack means mounted on at least one cradle of each unit and engageable with the floor for transferring load from the cradle rollers to the floor for securing the scaffolding structure against free rolling movement.

PETER A. WYEN.