(No Model.) 4 Sheets—Sheet 1.

J. A. WALLACE.

TYPE WRITING MACHINE.

No. 423,644. Patented Mar. 18, 1890.

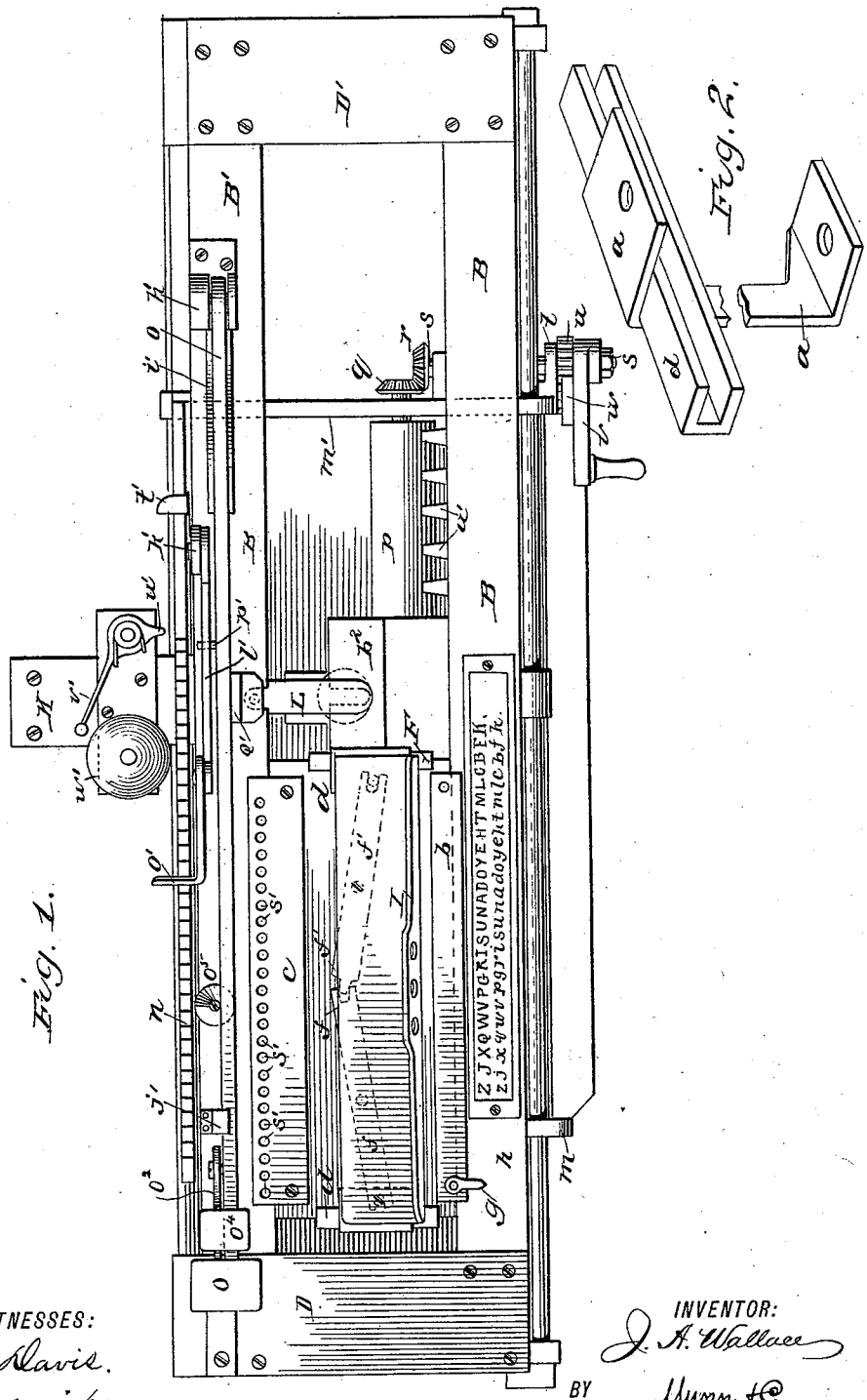

Fig. 1.

Fig. 2.

WITNESSES:
W. R. Davis.
C. Sedgwick

INVENTOR:
J. A. Wallace
BY Munn & Co
ATTORNEYS.

N. PETERS, Photo-Lithographer, Washington, D. C.

(No Model.) 4 Sheets—Sheet 2.

J. A. WALLACE.

TYPE WRITING MACHINE.

No. 423,644. Patented Mar. 18, 1890.

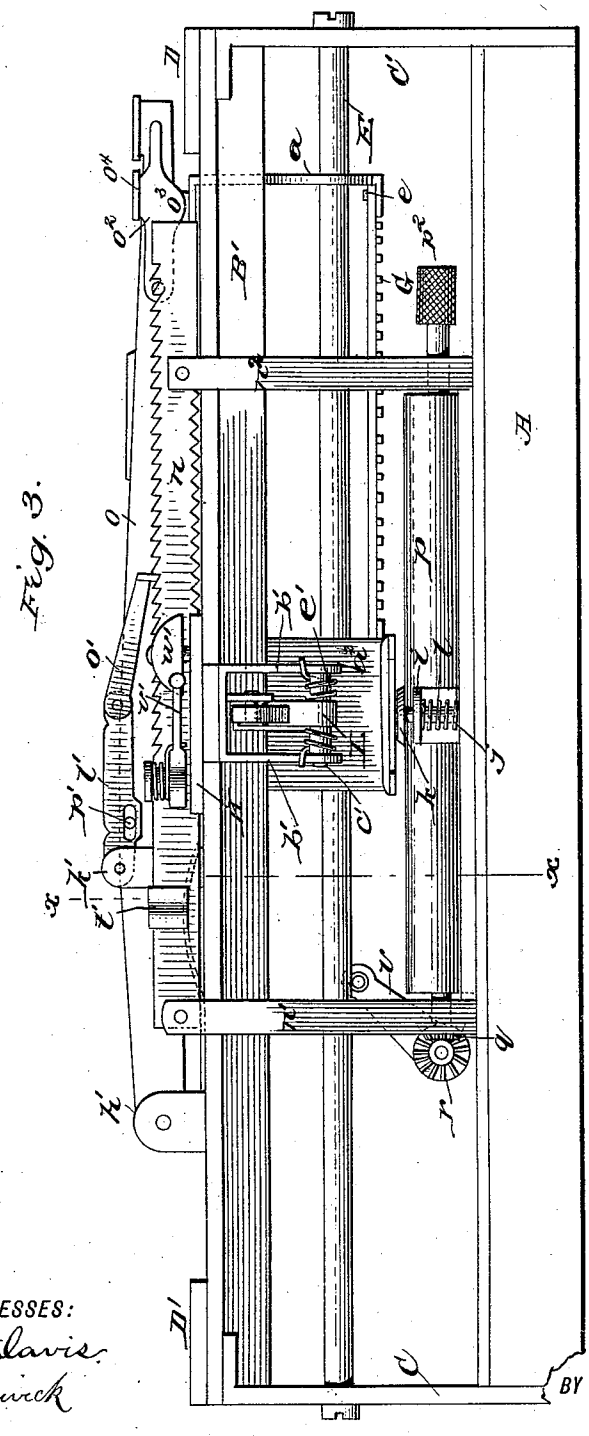

Fig. 3.

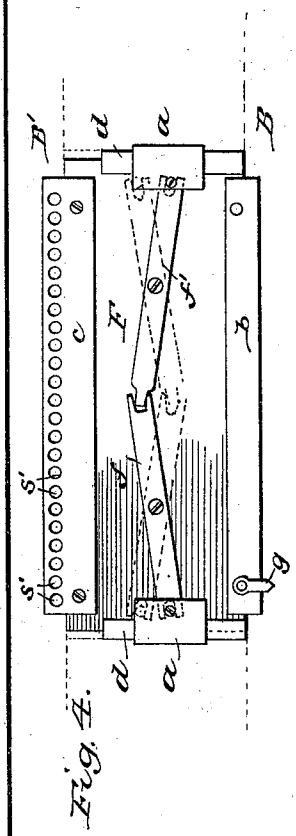

Fig. 4.

WITNESSES:

W. R. Davis.

C. Sedgwick

INVENTOR:

J. A. Wallace

BY Munn & Co

ATTORNEYS.

N. PETERS, Photo-Lithographer, Washington, D. C.

(No Model.) 4 Sheets—Sheet 3.

J. A. WALLACE.

TYPE WRITING MACHINE.

No. 423,644. Patented Mar. 18, 1890.

Fig. 5.

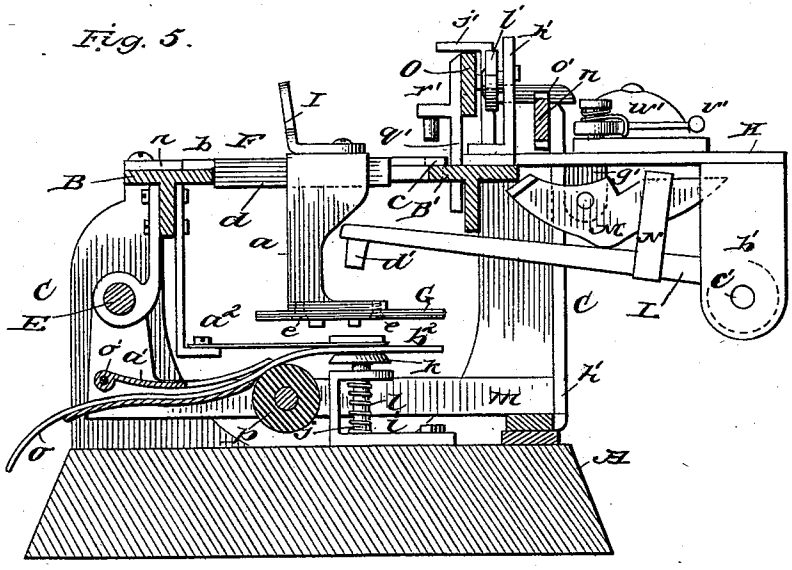

Fig. 6.

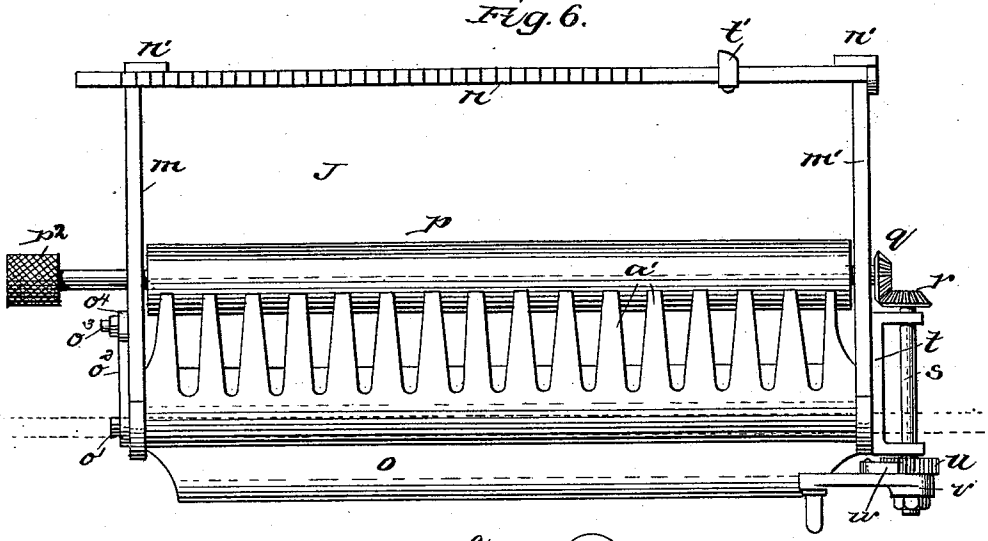

Fig. 6a

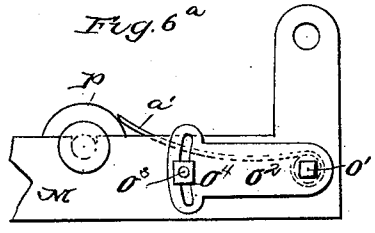

WITNESSES:

W. R. Davis.

C. Sedgwick

INVENTOR:

J. A. Wallace

BY Munn & Co

ATTORNEYS.

N. PETERS, Photo-Lithographer, Washington, D. C.

(No Model.)

4 Sheets—Sheet 4.

J. A. WALLACE.

TYPE WRITING MACHINE.

No. 423,644. Patented Mar. 18, 1890.

Fig. 7.

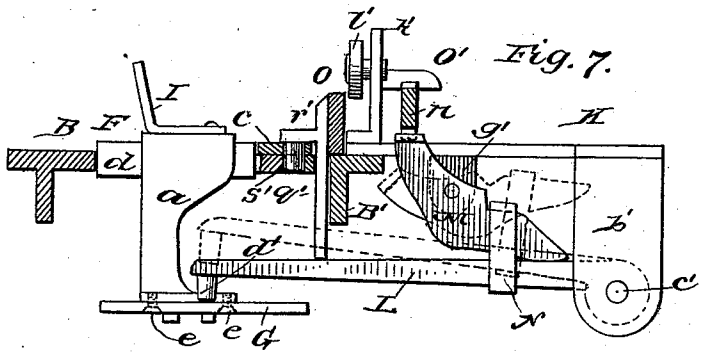

Fig. 8.

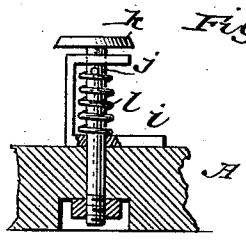

Fig. 9

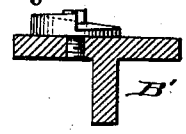

Fig. 10

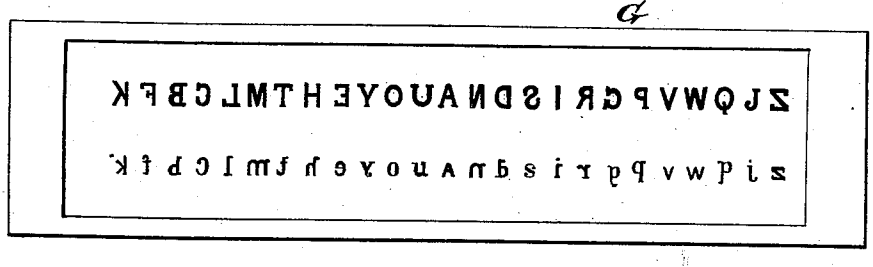

WITNESSES:

W. R. Mavis.

C. Sedgwick

INVENTOR:

J. A. Wallace

BY Munn & Co

ATTORNEYS.

N. PETERS, Photo-Lithographer, Washington, D. C.

UNITED STATES PATENT OFFICE.

JAMES A. WALLACE, OF ALEXIS, ILLINOIS.

TYPE-WRITING MACHINE.

SPECIFICATION forming part of Letters Patent No. 423,644, dated March 18, 1890.

Application filed May 18, 1889. Serial No. 311,237. (No model.)

To all whom it may concern:

Be it known that I, JAMES A. WALLACE, of Alexis, in the county of Warren and State of Illinois, have invented a new and Improved Type-Writing Machine, of which the following is a description, reference being had to the annexed drawings, forming a part thereof, in which—

Figure 1 is a plan view of my improved type-writer. Fig. 2 is a detail perspective view of one of the type-plate-carrying brackets. Fig. 3 is a rear elevation. Fig. 4 is a plan view of the type-shifting mechanism. Fig. 5 is a transverse section taken on line $x\ x$ in Fig. 3. Fig. 6 is a plan view of the paper-carriage. Fig. 6^a is a detail side elevation of the comb-tightening device. Fig. 7 is a detail side elevation of the registering and printing mechanism. Fig. 8 is a side elevation of the platen. Fig. 9 is a side elevation of the spiral cam, and Fig. 10 is an inverted plan view of the type-plate.

Similar letters of reference indicate corresponding parts in all the views.

The object of my invention is to provide a type-writer which will be simple and inexpensive in its construction, easily operated, and which will produce writing having perfect alignment.

My invention consists in the combination and arrangement of parts, as will be hereinafter fully described.

The main frame of the machine consists of the base-plate A, the longitudinal bars B B′, the standards C C′, supporting the said bars, and the cross-bars D D′, connecting the longitudinal bars B B′ at the ends of the frame. The standards C support a cylindrical rod E, which forms a guide for the paper-carriage. The side bars B B′ form a guide for the type-plate carriage F, the said carriage being furnished with flanges $b\ c$, which extend partly over the upper surfaces of the bars B B′.

To the ends of the type-plate carriage F are fitted slides d, to which are attached the type-plate-carrying brackets a, which are turned inwardly at their lower ends to receive the type-plate G. The type-plate G is secured to the brackets a by screws e.

In the top of the type-plate carriage F are pivoted two similar levers $f\ f'$, which engage each other at the center of the carriage, and which also engage the slides d and brackets a, so as to cause the said slides to move in unison.

To the type-plate carriage is attached an index g, which moves along the letter-plate h, attached to the bar B of the frame, and to the said type-plate carriage F is secured a handle I, by which it may be moved longitudinally in the frame.

To the base A, at the center of the machine, is secured a guide i for the spindle j of the platen k. Surrounding the spindle j is a spiral spring l, which tends to press the platen k upward. The platen is of circular form, and is furnished with beveled edges to facilitate the passage of the paper over it.

The frame J of the paper-carriage is formed of the end bars $m\ m'$, the ratchet-bar n, supported by the standards $n'\ n^2$, extending upwardly from the end bars $m\ m'$, and the paper-guide o.

In the end pieces $m\ m'$ of the frame of the paper-carriage is journaled a paper-feed roller p. To one of the journals of the said paper-feed roller is attached a miter-wheel q, which is engaged by a miter-wheel r on the shaft s, journaled in the bracket t, attached to the end piece m' of the paper-carriage frame. To the other journal of the said roller is attached a milled wheel p^2, by which the paper may be rolled through the machine. Upon the said shaft s, near its outer end, is secured a ratchet-wheel u, and upon the shaft outside of the said ratchet-wheel is placed a lever v, which carries a pawl w, arranged to engage the ratchet-wheel u.

In the end pieces $m\ m'$ of the paper-carriage frame J, and a short distance above the paper-guide o, is journaled a rock-shaft o', carrying a spring-metal comb a', the teeth of which rest upon the roller p, and to the said shaft o' is attached an arm o^2, provided at the end thereof with a curved slot, which is adapted to slide over a threaded stud o^3, projecting from the side piece m, the said stud o^3 being provided with a nut o^4 for clamping the arm o^2 in any desired position, the object being to vary the pressure of the comb a' upon the roller p.

To the bar B′ at the rear of the machine is

attached a plate K, provided with ears b', which support the rock-shaft c'.

To the rock-shaft c' is attached the printing-lever L, which reaches over the top of the type-plate G and is provided with a stud d', which is adapted to strike the top of the type-plate G and produce the impression of a single letter upon the paper resting on the platen k. The printing-lever L is normally maintained in an elevated position by the spring e', which engages the ears b' and the said lever.

In ears g', projecting downward from the plate K, is pivoted the registering-lever M, one end of which extends through a loop N, carried by the lever L, the other being provided with a V-shaped edge adapted to engage the serrated lower edge of the ratchet-bar n.

Between ears h', projecting from the bar B', is pivoted a key-lever O, which extends to the cross-bar D and is pressed upward by a spring i', the upward motion of the said lever being limited by a stop j'.

To an ear k', attached to the bar B', is pivoted a slotted lever l', to the free end of which is jointed a pawl O', which is adapted to act upon the ratchet-bar n. A stud p', projecting from the side of the key-lever O, enters the slot of the lever l', so that when the lever O is depressed in the operation of printing, as will be presently described, it first causes the pawl O' to engage the ratchet-bar n.

To the key-lever O is attached a bar q', which extends down through an aperture in the bar B' in position to engage the printing-lever L, when the said key-lever O is depressed. The bar q' is provided with a right-angled arm r', which projects over the flange c of the type-plate carriage F, and carries a pin in position to enter any one of a series of holes s' in the said flange and cause the type-plate carriage to register, so that the impressions of the letters or characters on the paper will be properly arranged with reference to each other. At the same time the said pin holds the carriage stationary until the printing is done.

To the side of the key-lever O, near its free end, is pivoted a spacing-key O^2, which is provided with a downwardly-projecting lever O^3, which reaches below the key-lever, and a thumb-piece O^4, which extends over the top of the key-lever. The said spacing-key O^2 does not interfere with the free action of the key-lever O. The said key-lever O, when depressed, effects the printing and also the movement of the paper-carriage; but when the key-lever O is moved by touching the spacing-key O^2 the said spacing-key carries the key-lever O down far enough to move the paper-carriage, but not sufficiently to effect the printing, as the ear O^3 strikes the frame of the machine and limits the movement of the said lever O. The downward movement of the key-lever O is limited by a spiral cam O^5, pivoted to the bar B' of the machine-frame and adapted to turn so as to arrest the downward movement of the key-lever sooner or later, according to the requirements of the printing mechanism.

To the ratchet-bar n is attached an adjustable trip t', which is adapted to strike the shorter arm u' of the bell-hammer v', and thus ring the bell w' when the end of a line is reached, the said bell-hammer v' being provided with a spring which causes it to strike when the arm u' is released from the trip t'.

To the bar B of the main frame is attached an angled arm a^2, which carries the inking-pad b^2 in the path of the characters on the type-plate G, so that as the type-plate passes back and forth it receives ink from the said pad. The inking-pad b^2 is slotted at the center to allow the type to be pushed downward through the said pad and its support upon the paper immediately over the platen k.

The operation of my improved type-writer is as follows: The paper being placed between the comb a' and the roller p, as shown in Fig. 5, the type-plate carriage F is moved backward or forward until the index g is opposite the character to be printed. At the same time it is determined whether the character shall be upper or lower case by the moving of the type-plate G back or forward by means of the handle I. When the character upon the typle-plate is in position for printing, the lever O is depressed, thereby bringing the bar q' into contact with the printing-lever L, forcing the stud d' downward upon the type-plate, and the said plate, being of elastic material, is pushed downward, so as to cause an impression of the character upon the paper extending across the face of the platen k. While the lever O is passing downward, the pawl o' engages the ratchet-bar n and moves it forward one notch before the printing is done. At the same time the registering-lever M engages the under side of the ratchet-bar, not only preventing the ratchet-bar and paper-carriage attached thereto from being carried too far, but also holding the paper-carriage in a fixed position during the instant of printing. When the end of a line is reached, the pawl o' is lifted, the paper-carriage frame J is returned to the point of starting, and the roller p is turned through a part of a revolution by swinging the lever v. A new line is then begun and the operation proceeds as before.

Having thus described my invention, I claim as new and desire to secure by Letters Patent—

1. In a type-writer, the combination, with a carriage carrying a type-plate and provided with a series of apertures and a platen below the same, of a printing-lever provided with a stud adapted to engage the type-plate, a key-lever provided with a bar extending through the frame and adapted to engage a printing-lever, and a downwardly-projecting arm adapted to engage the apertures of the carriage, substantially as and for the purpose set forth.

2. In a type-writer, the combination, with

the paper-carriage frame J, provided with a double ratchet-bar *n* and the printing-lever L, of the registering-lever M, arranged to be operated by the printing-lever, the key-lever O, and the pawl O′, adapted to be operated by the key-lever, substantially as described.

3. In a type-writer, the combination, with the paper-carriage provided with ratchet-bar and the printing-lever, of a key-lever adapted to operate the printing-lever, a pivoted lever loosely connected to and operated by the key-lever, and a pawl pivoted to the said lever and adapted to engage the ratchet-bar of the paper-carriage, substantially as herein shown and described.

4. In a type-writer, the combination, with the type-plate G, of the brackets *a*, the slides *d*, the carriage F, and the levers *f f′*, pivoted to the carriage and connected with the slides *d*, substantially as specified.

JAMES A. WALLACE.

Witnesses:
M. C. PORTER,
D. M. HARKRADER.