March 25, 1947. W. S. PANDOFF 2,418,091

BLOOM TURNING APPARATUS

Filed Dec. 29, 1944 4 Sheets-Sheet 1

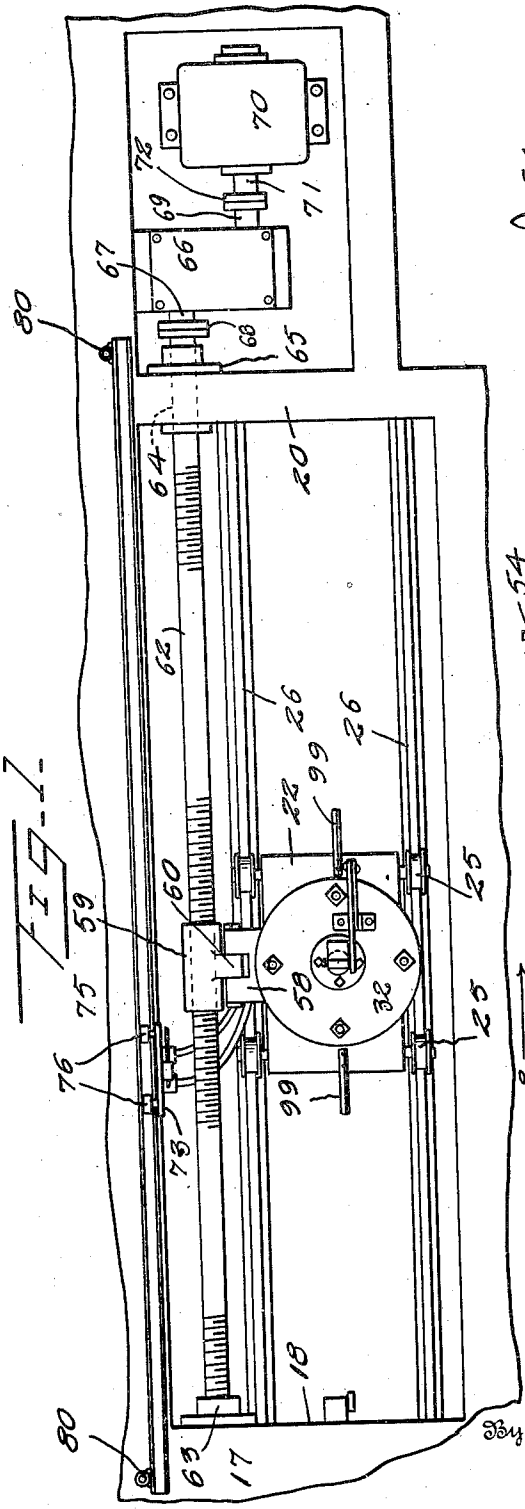

FIG. 1

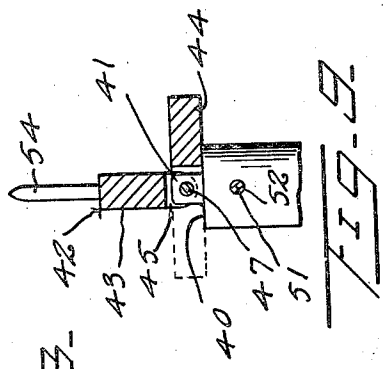

FIG. 5

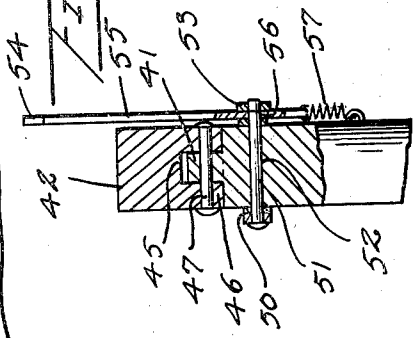

FIG. 6

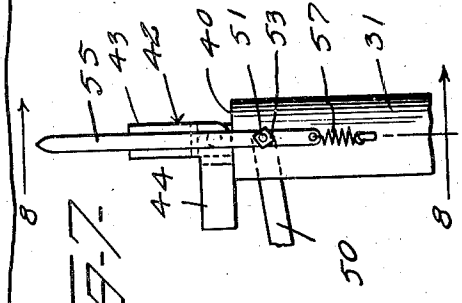

FIG. 7

Inventor

W. S. Pandoff

By Kimmel & Crowell

Attorneys

March 25, 1947. W. S. PANDOFF 2,418,091

BLOOM TURNING APPARATUS

Filed Dec. 29, 1944 4 Sheets-Sheet 2

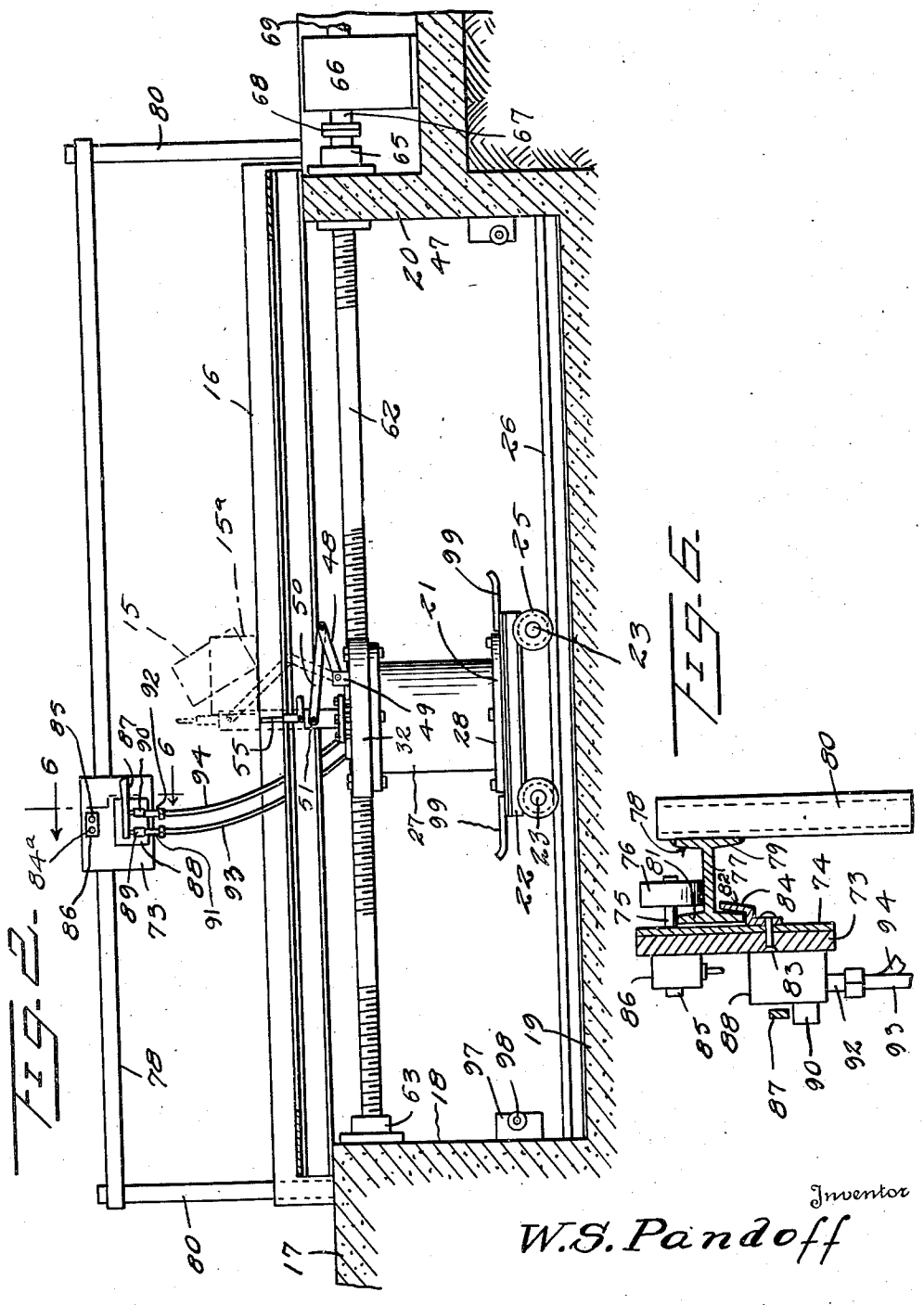

FIG. 2.

FIG. 5.

Inventor

W. S. Pandoff

By Kimmel & Crowell

Attorneys

March 25, 1947. W. S. PANDOFF 2,418,091

BLOOM TURNING APPARATUS

Filed Dec. 29, 1944 4 Sheets-Sheet 3

Fig. 3

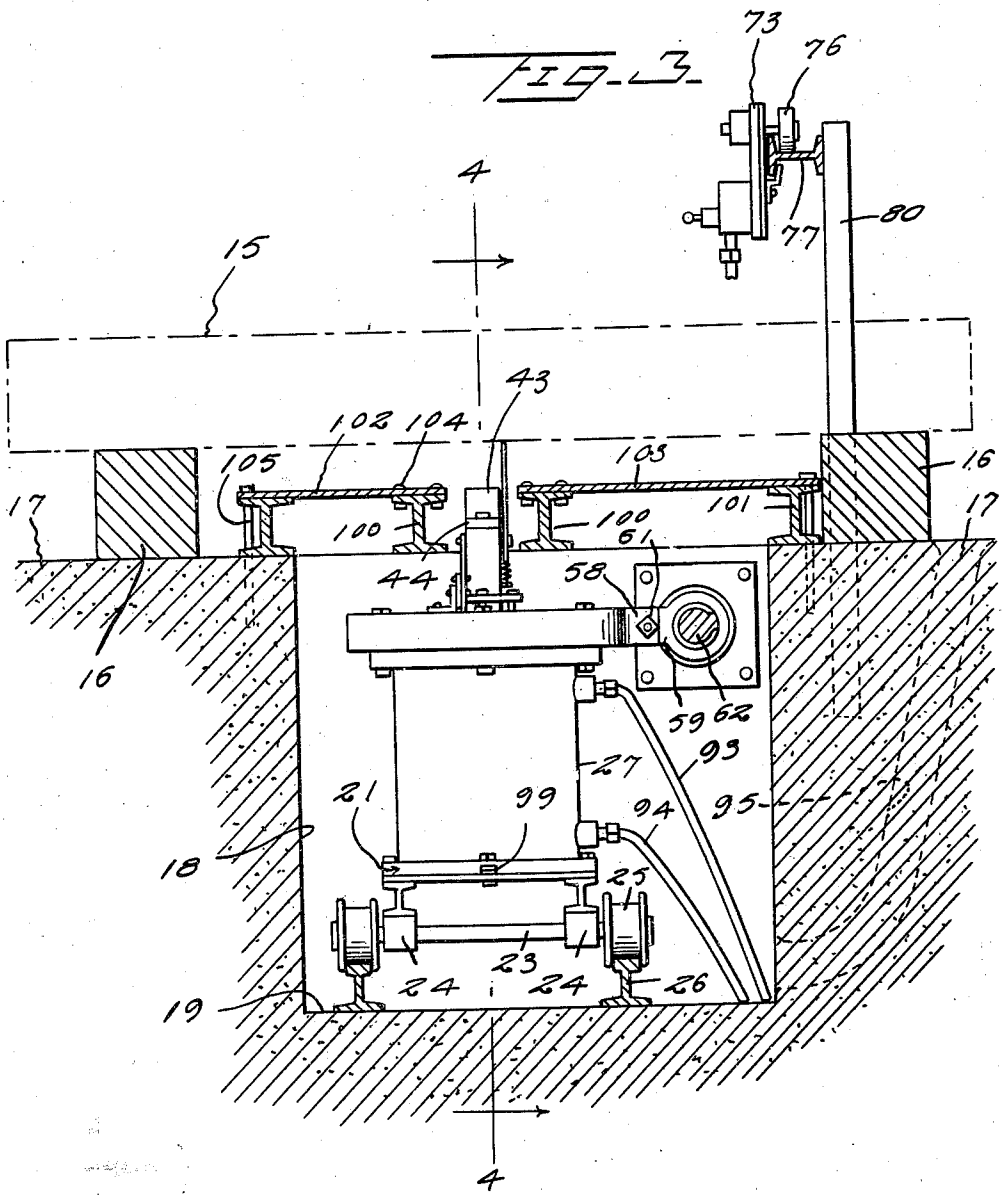

Inventor

W. S. Pandoff

By Kimmel & Crowell Attorneys

March 25, 1947. W. S. PANDOFF 2,418,091

BLOOM TURNING APPARATUS

Filed Dec. 29, 1944 4 Sheets-Sheet 4

FIG. 5.

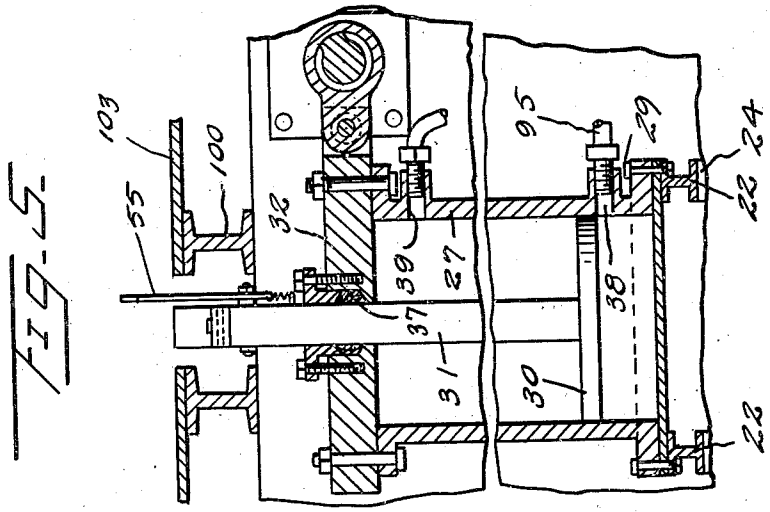

FIG. 4.

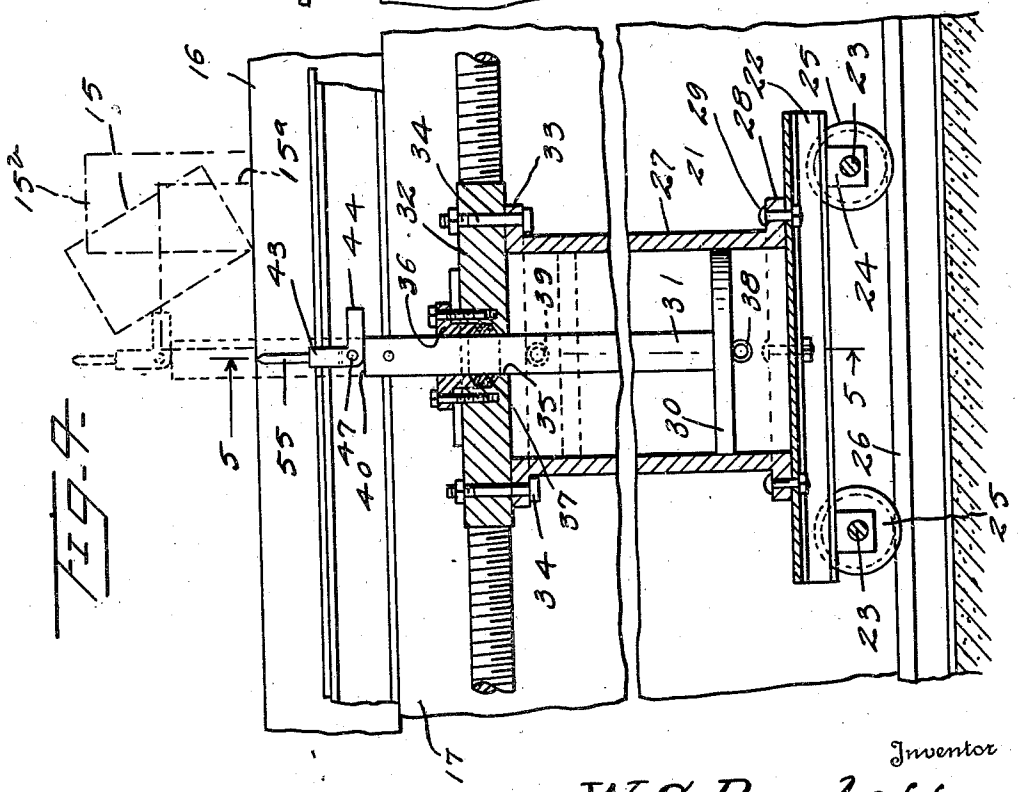

Inventor

W. S. Pandoff

By Kimmel & Crowell

Attorneys

Patented Mar. 25, 1947

2,418,091

UNITED STATES PATENT OFFICE

2,418,091

BLOOM TURNING APPARATUS

William S. Pandoff, Canton, Ohio

Application December 29, 1944, Serial No. 570,454

3 Claims. (Cl. 214—1)

1

This invention relates to improvements in turning devices for metallic blooms or the like, having angularly arranged connected faces extending along its length and disposed for intermittent turning movement from one face to another along a supporting bed to afford inspection and cleaning.

One of the methods at present employed for handling these blooms is to discharge the bloom from a chipping machine onto a bed consisting of a pair of wooden timbers spaced apart in parallel relation and adjacent the ends of the bloom for supporting the latter. The bloom is heavy and weighs about two to two and a half tons. After the bloom is thus placed upon the bed it is turned in a manner to successively present its different faces for inspection and any slag or scrap adhering thereto is chipped off by hand operation. To turn these heavy blooms, special hand tools in the form of clamps are provided which grip both ends of the bloom at a time and by which the bloom is turned to expose its different faces. Two men are required to operate each tool and one tool is required at each end of a bloom to facilitate handling. Even under these conditions the work is arduous and very dangerous due to the fact that the tools sometimes grip the bloom and whirl around with the latter striking the men if they are not alert.

With the foregoing disadvantages in mind, it is an object of the present invention to provide an improved mechanical device for turning a bloom more efficiently and without the use of special hand tools, in a manner to successively present its different faces for inspection and cleaning.

Another object of the present invention is to provide an improved bloom turning device of the type referred to so constructed and arranged that one person can operate the same with like efficiency and without the liability of injury to the operator.

Another object of the present invention is to provide an improved bloom turning device of the type referred to, which embodies means for turning the bloom in a like manner after the inspection and cleaning operations to effect further movement along the bed to a remote point for further use.

Another object of the present invention is to provide an improved bloom turning device of the type referred to which embodies selectively operable means affording operation in opposite directions so that the bloom may be moved in either direction along the bed and without any changes in structure.

2

Another object of the present invention is to provide an improved bloom turning device of the type referred to which is designed to handle blooms of different sizes and lengths without any modification of the structure.

Another object of the present invention is to provide an improved bloom turning device of the type referred to which is simple in construction, efficient and safe in operation, and inexpensive to manufacture.

With the objects above indicated and the objects hereinafter explained in view, my invention consists in the construction and combination of elements hereinafter described and claimed.

Referring to the drawings:

Figure 1 is a top plan view of the bloom turning device embodying the present invention but with the floor removed to more clearly show the relative positions of the parts;

Figure 2 is a side elevational view of the bloom turning device shown in Figure 1, but with the floor in place and a bloom is shown in dot and dash lines indicating two different positions during its turning;

Figure 3 is an end elevational view of the bloom turning device shown in Figure 2 but on an enlarged scale, and looking from the motor end;

Figure 4 is a fragmentary sectional view taken on the line 4—4 of Figure 3 and showing the upper extreme position of the angle member, a bloom also being shown in dot and dash lines indicating three different positions during its turning;

Figure 5 is a fragmentary sectional view taken on the line 5—5 of Figure 4 and showing further details of the structure;

Figure 6 is a fragmentary end elevational view of the control devices for the electric motor and piston;

Figure 7 is a fragmentary front elevational view of the locating indicator on the end of the piston rod;

Figure 8 is a fragmentary side elevational view of the locating indicator shown in Figure 7 with a part broken away to show further details of the structure; and

Figure 9 is a fragmentary rear elevational view of the locating indicator shown in Figure 7.

In the drawings, I have shown a preferred construction of my bloom turning device which is employed for turning blooms in a manner to successively present different faces of the bloom for inspection and cleaning and, additionally, to advance the bloom along the bed.

The bloom, indicated by the reference numeral 15, is of rectangular shape in cross section and

of considerable length and weight. The bloom 15 is disposed for intermittent turning movement upon a bed comprising a pair of wooden timbers 16 spaced apart relatively in parallel relation and of any desirable length for the work intended, as more clearly shown in Figures 2 and 3. The timbers 16, preferably, rest upon a foundation or base 17, of concrete or other suitable material, and between the timbers the foundation is formed with a pit 18 extending downwardly to a horizontally disposed lower floor 19, as more clearly shown in Figure 3. The pit 18 extends substantially throughout the length of the timbers, as more clearly shown in Figure 1, and at one end is provided with a wall or partition 20 which extends transversely of the pit to provide an enclosure for the operating parts of the bloom turning device.

A carriage or car 21 is formed, at its lower portion, with a horizontally disposed platform 22 which has axles 23 extending transversely of the platform and located at the front and back respectively, as more clearly shown in Figure 2. The axles are journaled in bearings 24 and flanged wheels 25 are rotatably mounted upon the ends of the axles. The carriage or car 21 is adapted for movement along the floor of the pit and a pair of track rails 26 are secured on the floor 19 in parallel spaced relation in a manner to accommodate the wheels 25 so that the car may be suitably guided during its movements along the track in a manner to be later described.

The car 21 is further provided with a vertically disposed cylinder 27 which has its lower end resting upon the adjacent face of the platform 22 and the cylinder is formed with an outwardly extending peripheral flange 28 having a plurality of angularly spaced openings in alignment with similarly spaced openings in the platform to receive bolts 29 for securely connecting the cylinder to the platform 22. A piston 30 is slidably disposed on the inside of the cylinder 27 and has a piston rod 31 of reduced diameter rigidly connected to the piston and extends centrally upward therefrom beyond the upper end of the cylinder, as more clearly shown in Figure 4. A closure or head member 32 is disposed on the upper end of the cylinder 27 and the cylinder is, likewise, provided with an outwardly extending peripheral flange 33 which supports the closure member 32 and a plurality of aligned openings are provided in the flange and closure member to receive bolts 34 by which the members are rigidly connected. The closure member 32 is provided with a central opening 35 through which the piston rod 31 slides and a packing gland 36 encircles the piston rod 31 and is adapted to compress a flexible packing member 37 to effect a fluid tight seal. The cylinder 27 is further provided with an opening 38 which extends through the wall, and communicates with the lower side of the piston 30, while an opening 39, likewise, extends through the wall but communicates with the opposite side of the piston, the openings being adapted for communication with a source of fluid supply so as to effect movement of the piston in the desired direction for a purto be later described.

The upper end of the piston rod 31 is formed with a flat horizontally disposed face 40, as more clearly shown in Figures 7, 8 and 9, and an integral extension 41 projects centrally outward from the face 40. An angle member 42, which is employed for engaging the bloom, has arms 43 and 44 extending outwardly at right angles to

one another. A recess 45 is formed on the outer side of the closed end of the angle member 42 to provide relatively spaced extensions 46 which project outwardly to pivotally receive the piston rod extension 41 therebetween. The extensions 41 and 46 are provided with aligned openings to receive a pin 47 the outer ends of which are headed to secure the extensions in a manner to afford relative pivotal movement of the angle member 42 so that either the arm 43 or the arm 44 will rest securely upon the adjacent face 40 on the piston rod 31 for a purpose to be later described.

It is important that the piston rod 31 be secured against rotations with reference to the cylinder 27 in which it is slidably mounted and any suitable means may be adopted. One simple construction is shown in the drawings which comprises a link 48 having one end pivotally connected to spaced ears 49 secured to and projecting upwardly from the closure member 32 and its other end pivotally connected to the adjacent end of another link 50. The other end of the link 50 is pivotally connected by a bolt 51 which projects through an opening 52 formed in the upper end of the piston rod and is removably secured by a nut 53 to prevent axial rotation of the rod but permitting unrestricted reciprocation.

A locating indicator 54 is likewise mounted on the upper end of the piston rod 31 to assist the operator in determining the position of the angle member 42. The indicator comprises an elongated flat member 55 having an opening 56 formed near its lower end to receive the opposite end of the bolt 51 by which the member 55 is pivotally mounted. A coil spring 57 has one end connected to the lower adjacent end of the member 55 and its other end connected to the piston rod 31 and is tensioned to keep the upper end of the member 55 in a vertical position. The upper end of the member 55 projects beyond the upper extremity of the angle member 42 and is so positioned that any object which it strikes deflects the same about its pivot but is returned to its vertical position by the spring.

The piston rod 31 is, of course, capable of movement in a vertical direction and being prevented from axial rotation, the angle member 42 is likewise moved in unison therewith. The dotted lines in Figure 4 show the upper limit of the movement of the angle member 42 and the manner in which the bloom has been partially turned.

Some suitable means should be provided for moving the car 21 along the track and a very effective one is shown in the drawings. The closure member 32 is provided with lateral extensions 58 spaced apart relatively and disposed in the same horizontal plane as that of the cover member, more clearly shown in Figures 1 and 3. An interiorly threaded nut-like member 59 is provided with a lateral extension 60 which freely fits between the extensions 58 and all of the extensions are provided with aligned openings to receive a bolt and nut connection 61 by which the nut-like member and head are swivelly connected for unitary movement.

An externally threaded shaft 62 is suspended in the pit in parallel relation to the track and the nut-like member 59 is threadably mounted on the shaft in a manner to effect relative movement. This threaded arrangement further prevents movement of the car 21 in a direction opposite to that in which the force is applied dur-

ing the elevation of the angle member and the bloom. One end of the shaft 62 is freely mounted in an end bearing and hanger member 63, secured on one of the end walls of the pit 17 while the other end extends freely through an opening 64 in the partition wall 20, suitable bushings of any well known type being provided to reduce friction and wear. The other end of the shaft 62 projects beyond the wall 20, as shown in Figure 1, and is freely mounted in a bearing and hanger member 65 secured on the outer side of the wall 20. A gear reduction unit 66, of any well known type, is secured to the foundation and has a stub shaft 67 projecting outwardly beyond the housing and connected through a coupling 68 with the adjacent end of the threaded shaft 62 in a manner to impart rotation thereto. A second stub shaft 69 projects outwardly beyond the housing but from the other end of the gear train, and is adapted for connection with any desirable power means for effecting rotation of the shaft 62 in either direction of rotation at a reduced speed. The power means herein shown is an electric reversible motor 70 secured to the foundation and having a motor shaft 71 projecting outwardly beyond the housing. The motor shaft 71 and the gear reduction shaft 69 are connected together by a coupling 72 in such a manner that the train of gears are adapted for driving rotation in either direction depending upon the direction of rotation of motor. The motor 70 is electrically connected in a suitable circuit in which operating switches may be mounted in close proximity to the operator in a manner to be later described.

Any suitable means may be employed for operating the piston 30 and the electric motor 70 but a simple and handy arrangement is shown in the drawings. Referring more particularly to Figures 2 and 6, a panel board 73 of any desirable size, is preferably mounted for bodily movement so as to afford ready acessibility to the operator as he moves along with the car 21. The panel 73 of insulating material, has a metal backing member 74 secured thereto and a pair of stub axles 75 having rollers 76 thereon adapted for rolling engagement with the upper adjacent face of a horizontally disposed web 77 of an I beam 78. The beam 78 is disposed horizontally above the foundation and parallel with the track 26, and laterally thereof at a selected distance a flange 79 being supported on a pair of pipe standards 80 to which the flange is welded or otherwise secured. The lower ends of the standards 80 are suitably embedded in the floor to prevent sagging of the beam. The near flange 81 of the beam 78 is in close proximity to the backing plate 74 and the upper portion of the flange projects between the plate and rollers. Clamp 82 is secured by a bolt 83 to the backing plate 74 and has an offset portion 84 which engages the lower portion of the flange 81. This construction prevents accidental removal of the control panel but at the same time affords easy movement on the part of the operator.

As before stated, it is desirable to mount the operating switches at a position readily accessible to the operator and for this reason a pair of push buttons 84a and 85 are suitably mounted in a box 86 which in turn is secured on the outer face of the panel 73. These buttons are connected in the same electrical circuit with the motor 70 and by depressing one or the other, the circuit is closed. This starts the motor to running and its direction of operation depends upon

which button is pressed. For operating the piston 30, however, air may be employed as shown, and a hand control valve 87 is suitably mounted in a housing 88. A pair of valve members 89 and 90 are mounted on the outside of the housing 88 and have hollow extensions 91 and 92 respectively to receive the upper ends of flexible tubes 93 and 94. The flexible tubes 93 and 94 extend downwardly from the panel and pass freely through conduits 95 in the foundation and outwardly at the bottom of the pit 17. The lower ends of the tubes 93 and 94 are connected respectively with the openings 39 and 38 in the cylinder to effect communication with the hand control valve. The valve members 89 and 90 are suitably connected with an air supply line and by moving the hand control valve one or the other of the tubes 93 and 94 is placed in communication with the supply line so that the piston is raised or lowered as desired.

To prevent the car 21 from bumping the end wall of the pit 17 as it is moved along the tracks, limit switches 97 are secured on the end walls in alignment with the car platform 22. The switches have rollers 98 slidably mounted on the outside of the switch boxes and control the opening and closing of the switch elements. The limit switches are connected in circuit with the motor 70 and control its operation. Switch trip angles 99 are secured to the platform 22 and have projecting ends in alignment with the rollers 98 for shutting off the switch which stops the car before it strikes the end walls.

To afford support to the persons doing inspection and shippers, the pit 18 is covered over a greater portion of its expanse. A plurality of I-beams 100 and 101 are provided which rest upon the foundation 17 and are spaced apart in pairs on opposite sides of the path of movement of the angle member 42, as more clearly shown in Figures 2 and 3. The I-beams 100 adjacent the angle member 42 extend in parallel relation over the open pit 18 and have their ends supported on the adjacent end walls. The I-beams 101 are disposed just beyond the pit 18 and rest on the foundation throughout their length, the beams 101 being in parallel spaced relation with respect to the beams 100. Sheet metal floors 102 and 103 extend horizontally over the space between adjacent pairs of beams 100 and 101 and have their edge portions resting on the upper flanges of the beams to which they are riveted at 104 or otherwise secured. The I-beams 101 are additionally secured to the foundation 17 by through bolts 105 which extend through both flanges into the concrete or other material of which the foundation is composed. An important condition of the floor construction is that sufficient space be maintained between the inner adjacent beams 100 so that there will be no interference with the vertical movement of the angle member 42 and its longitudinal movement along the pit effected by the guided movement of the car 21.

In the operation of the bloom turning device illustrated in the drawings, the bloom 15 has a plurality of angularly arranged connected faces extending along its length and extends across the pit, having its outer end portions resting upon the timbers 16 as indicated by the dotted line position 15a of the bloom. The car 21 with its piston in lowered position is moved along the track 26 by the closing of the electric circuit to the motor 70 through the medium of one of the push buttons on the traveling panel 73 until

the indicator 55 is substantially in line with the outside face of the bloom when it is in the position indicated by 15a. The operating motor 70 is then stopped by the medium of the other push button, which stopping locks the car 21 in the selected position by means of the screw drive. The piston 30 is then raised through the medium of the hand control valve 87 on the panel 73, which establishes communication between the source of air supply and the under side of the piston 30 through the flexible tube 94 and raises the angle member 42 until it engages the adjacent corner portion of the bloom. Further upward movement of the piston effects a turning movement of the bloom about an edge that remains in engagement with the timbers 16 and finally continues its turning movement through gravity to a position in which the bloom rests upon its next succeeding face as indicated by 15b, thus presenting the upper face for inspection and cleaning as well as advancing it to a new position along the timbers.

The piston 30 is next lowered through the medium of the hand control valve 87 on the panel 73, by moving the lever in a different direction which first, cuts off the air supply to the under side of the piston and next, establishes communication between the source of air supply and the upper side of the piston 30 through the flexible tube 93. The lowering of the piston results in a like lowering of the angle member 42 until it reaches a position in which the locating indicator 55 is disposed slightly below the bloom or that position in which the indicator and angle member were initially. When the angle member 42 reaches this position the hand control valve is released and the piston 30 is held against further lowering movement. At this time the car 21 is again moved along the track 26 by the same procedure as before explained until it reaches the new position of the bloom and the bloom is again engaged by the upwardly moving angle member 42 which moves the bloom in the manner before explained from one face to its next succeeding. This sequence of operations continues until all of the faces of the bloom have been successively presented for inspection and cleaning and the bloom advanced along the timbers 16.

After the bloom has been turned in the manner heretofore explained and no further inspection and cleaning are required, the turning of the bloom may be continued to intermittently advance the bloom along the timbers 16 by the same sequence of operations until it reaches the end of the pit 17 where the bloom may be removed by any suitable devices and conveyed to any location where it is to be used.

The apparatus is also designed for moving the blooms in the opposite direction along the timbers 16 in the manner aforesaid, which requires merely the flipping over of the angle member 42 from the position shown in full lines in Figure 9 to the position shown in dotted lines in the same view. The reversibility of the electric motor 70 provides the necessary driving power for the shaft 62 which may be rotated in the opposite direction by the mere proper selection of the push button control switch. This effects movement of the car 21 in the reverse direction but the sequence of operations for engaging and turning the bloom are precisely the same as before explained. Inasmuch as the car 21 is moved along the track 26 in the pit 17 which is covered by the metal floor, limit switches 97 are positioned at the ends of the pit for engagement by the trip angles 99 on the car. When the car 21 travels to either end of the pit the trip angle engages the roller 98 which opens a switch and disconnects the motor.

While I have described the preferred embodiment of the invention, it is to be understood that I am not to be limited thereto, inasmuch as changes and modifications may be made thereto without departing from the spirit of the invention as defined in the appended claims.

What I claim is:

1. A turning device for a bloom having angularly arranged connected faces extending along its length and disposed for intermittent movement from one face to another along a supporting bed, the combination of: a vertically movable angle member adapted for cooperative engagement with an adjacent edge of the bloom and adapted to move the bloom from a position in which one face was in engagement with the bed to another in which the succeeding face is in engagement with the bed when said member is moved in an upward direction; a movable rod having its upper end pivotally connected to the closed end of said angle member for movement therewith and its lower end securely connected to a piston, said angle member being pivotally mounted to afford a ninety degree rotation of said angle member to adapt the device for operation in different directions; a cylinder in which said piston is slidably mounted and provided with fluid openings affording communication with different sides of said piston; and fluid control means operatively associated with the fluid openings in said cylinder for controlling the direction of movement of said piston.

2. A turning device for a bloom having angularly arranged connected faces extending along its length and disposed for intermittent movement from one face to another along a supporting bed, the combination of: a vertically movable angle member adapted for cooperative engagement with an adjacent edge of the bloom and adapted to move the bloom from a position in which one face was in engagement with the bed to another in which the succeeding face is in engagement with the bed when said member is moved in an upward direction; a movable rod having its upper end pivotally connected to the closed end of said angle member for movement therewith and its lower end securely connected to a piston, said angle member being pivotally mounted to afford rotation of said angle member to adapt the device for operation in different directions; a cylinder in which said piston is slidably mounted; fluid control means operatively associated with said cylinder for controlling the direction of movement of said piston; and a spring pressed lever loosely attached to said rod and extending above the arms of said angle member to indicate the location of said angle member.

3. A turning device for a bloom having angularly arranged connected faces extending along its length and disposed for intermittent movement from one face to another along a supporting bed, the combination of: a vertically movable angle member adapted for cooperative engagement with an adjacent edge of the bloom and adapted to move the bloom from a position in which one face was in engagement with the bed to another in which the succeeding face is in engagement with the bed when said member is moved in an upward direction; a movable rod

having its upper end pivotally connected to the closed end of said angle member for movement therewith and its lower end securely connected to a piston, said angle member being pivotally mounted to afford relative reversal of said angle member to adapt the device for operation in different directions; a cylinder in which said piston is slidably mounted and provided with fluid opening affording communication with different sides of said piston; and fluid control means operatively associated with the fluid openings in said cylinder for controlling the direction of movement of said piston.

WILLIAM S. PANDOFF.

REFERENCES CITED

The following references are of record in the file of this patent:

UNITED STATES PATENTS

Number	Name	Date
915,669	Fawell	Mar. 16, 1909
1,562,773	Johnson	Nov. 24, 1925
1,986,620	Borden et al.	Jan. 1, 1935
2,004,060	Brown	June 4, 1935
780,203	Ladd	Jan. 17, 1905

FOREIGN PATENTS

Number	Country	Date
565,060	German	Nov. 25, 1932
6,743	Swedish	May 6, 1895
634,386	German	Aug. 26, 1935