US00D825557S

(12) United States Design Patent

Matsumiya et al.

(10) Patent No.: US D825,557 S
(45) Date of Patent: ** Aug. 14, 2018

(54) **WIRELESS COMMUNICATION DEVICE**

(71) Applicant: **MITUTOYO CORPORATION**, Kawasaki, Kanagawa (JP)

(72) Inventors: **Sadayuki Matsumiya**, Sagamihara (JP); **Atsuya Niwano**, Tokyo (JP); **Yu Sugai**, Hadano (JP); **Shigeru Ohtani**, Kawasaki (JP); **Jun Odake**, Tokyo (JP)

(73) Assignee: **MITUTOYO CORPORATION**, Kawasaki (JP)

(**) Term: **15 Years**

(21) Appl. No.: **29/593,542**

(22) Filed: **Feb. 9, 2017**

(30) **Foreign Application Priority Data**

Sep. 27, 2016 (JP) 2016-020653

(51) **LOC (11) Cl.** **14-02**

(52) **U.S. Cl.**
USPC **D14/358**; D14/357; D14/433; D10/74; D10/46

(58) **Field of Classification Search**
USPC D14/356, 357, 358, 361, 362, 363, 365, D14/367, 370, 388, 432, 434, 203.1, D14/203.6, 204, 240, 242, 299, 125, 129, D14/130, 140, 155, 168, 188, 195, 300, D14/302, 314, 348, 351, 496, 142, 433; D13/103, 107, 108, 123, 152, 158, 162, D13/162.1, 163, 168, 184, 199; D10/46, D10/47, 49, 52, 58, 61, 65, 66, 74, 75, D10/103, 104.1
CPC ... H04W 88/08; H04W 88/085; H04W 88/00; H04W 88/005; H04W 88/02; H04W 88/12; H04W 88/14; H04W 88/16; H04W 88/18; H04W 4/00; H04W 16/26; H01Q 1/02; H01Q 1/2291; H01Q 1/246; H01Q 1/42; H04B 1/38
See application file for complete search history.

(56) **References Cited**

U.S. PATENT DOCUMENTS

D188,130	S *	6/1960	Stuckrath	D10/46
D272,443	S *	1/1984	Wong	D14/155
D324,344	S *	3/1992	Collister	D10/46
D327,879	S *	7/1992	Lou	D14/357

(Continued)

OTHER PUBLICATIONS

Measuring instruments. (Design - © Questel) orbit.com.[online PDF] 13 pgs. Print Dates range from Feb. 7, 2012 to Jan. 20, 2017. [Retrieved on Mar. 13, 2018] https://sobjprd.questel.fr/export/QPTUJ214/pdf2/163a97d6-8d01-447f-af50-490453fb1c47-201618.pdf.*

(Continued)

Primary Examiner — Susan Bennett Hattan
Assistant Examiner — Marie D. Fast Horse
(74) *Attorney, Agent, or Firm* — Oliff PLC

(57) **CLAIM**

The ornamental design for a wireless communication device, as shown and described.

DESCRIPTION

FIG. **1** is a front, top, right-side perspective view of the wireless communication device;
FIG. **2** is a front, bottom, left-side perspective view thereof;
FIG. **3** is a front elevational view thereof;
FIG. **4** is a rear elevational view thereof;
FIG. **5** is a top plan view thereof;
FIG. **6** is a bottom plan view thereof;
FIG. **7** is a right-side elevational view thereof; and,
FIG. **8** is a left-side elevational view thereof.
The broken lines depict unclaimed parts of the wireless communication device, and thus form no part of the claimed design.

1 Claim, 6 Drawing Sheets

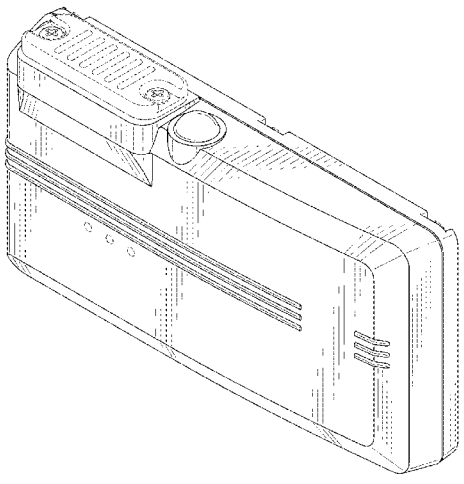

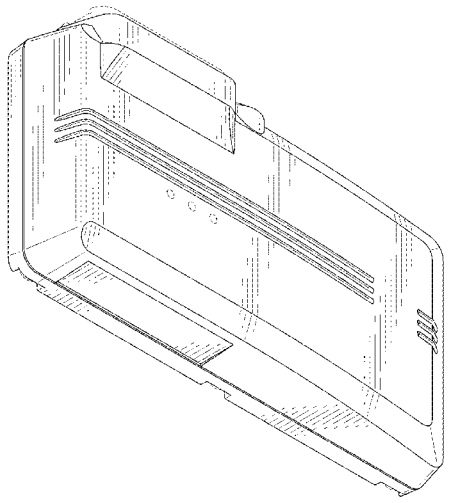

(56) **References Cited**

U.S. PATENT DOCUMENTS

D327,880	S *	7/1992	Lou	D14/357
D331,394	S *	12/1992	Kobayashi	D14/242
D331,395	S *	12/1992	Lou	D14/357
D338,193	S *	8/1993	Sasaki	D14/433
D340,059	S *	10/1993	Wetzel	D14/433
D347,593	S *	6/1994	Davis	D10/104.1
D351,601	S *	10/1994	Rak	D14/242
D352,033	S *	11/1994	Robertson, Jr.	D14/188
D357,427	S *	4/1995	Lee	D10/104.1
D358,380	S *	5/1995	Sakaguchi	D14/357
D359,287	S *	6/1995	Heberling	D14/242
D363,064	S *	10/1995	Rogov	D14/433
D363,289	S *	10/1995	Kobayashi	D14/242
D364,859	S *	12/1995	Fenton	D14/357
D365,529	S *	12/1995	Peroni	D10/103
D372,024	S *	7/1996	Carlson, Jr.	D14/432
D373,316	S *	9/1996	Walters	D10/104.1
D374,675	S *	10/1996	Sakai	D14/242
D376,329	S *	12/1996	Youabian	D10/104.1
D377,645	S *	1/1997	Iwamoto	D14/385
D383,454	S *	9/1997	Osit	D14/402
D391,942	S *	3/1998	Lee	D14/341
D393,480	S *	4/1998	Komuta	D14/433
D405,064	S *	2/1999	Iino	D14/433
D411,523	S *	6/1999	Talesfore	D14/433
D415,131	S *	10/1999	Chang	D14/433
D415,704	S *	10/1999	Carroll	D10/104.1
D423,503	S *	4/2000	Abdo	D14/188
D428,350	S *	7/2000	Weingartner	D10/104.1
D433,642	S *	11/2000	Bauman	D10/104.1
D434,991	S *	12/2000	Brooks	D10/104.1
D445,705	S *	7/2001	Kliegman	D10/104.1
D454,084	S *	3/2002	Bogen	D10/104.1
D460,452	S *	7/2002	Yoshie	D14/358
D471,543	S *	3/2003	Yang	D14/240
D472,163	S *	3/2003	Manivone	D10/46
D478,086	S *	8/2003	Chuang	D14/433
6,769,603	B2 *	8/2004	Nagai	G11B 20/10527 235/375
D496,346	S *	9/2004	Fuss	D14/188
D501,476	S *	2/2005	Quijano	D14/352
D507,273	S *	7/2005	Ibuki	D14/433
D509,214	S *	9/2005	Chung	D14/240
D535,279	S *	1/2007	Krieger	D14/155
D561,617	S *	2/2008	Ishii	D10/65
D570,232	S *	6/2008	Kaluza	D10/46
D581,303	S *	11/2008	Concari	D10/104.1
D585,048	S *	1/2009	Uchimura	D14/155
D596,614	S *	7/2009	Wilson	D14/188
D596,615	S *	7/2009	Wilson	D14/188
D651,103	S *	12/2011	Greenberg	D14/358
D688,959	S *	9/2013	Arvidsson	D10/75
D705,189	S *	5/2014	Chovin	D14/159
D712,761	S *	9/2014	Matsumiya	D10/74
D721,349	S *	1/2015	Sugai	D14/159
D727,906	S *	4/2015	Neumann	D14/358
D743,815	S *	11/2015	Janu	D10/46
D752,454	S *	3/2016	Miller	D10/50
D788,106	S *	5/2017	Lin	D14/356
D788,776	S *	6/2017	Marzette, Jr.	D14/358
D789,361	S *	6/2017	Ali	D14/358
D791,767	S *	7/2017	Ali	D14/358
D798,296	S *	9/2017	Ali	D14/358
D805,409	S *	12/2017	Matsumiya	D10/62
D806,027	S *	12/2017	Ceravalo	D13/110
D809,944	S *	2/2018	Kawahara	D10/53

OTHER PUBLICATIONS

Measurement Data Wireless Communication System. U-WAVE. Mitutoyo Corporation. Catalog No. E12000. https://www.mitutoyo.co.jp/eng/products/keisokusystem/pdf/U-WAVE.pdf.

* cited by examiner

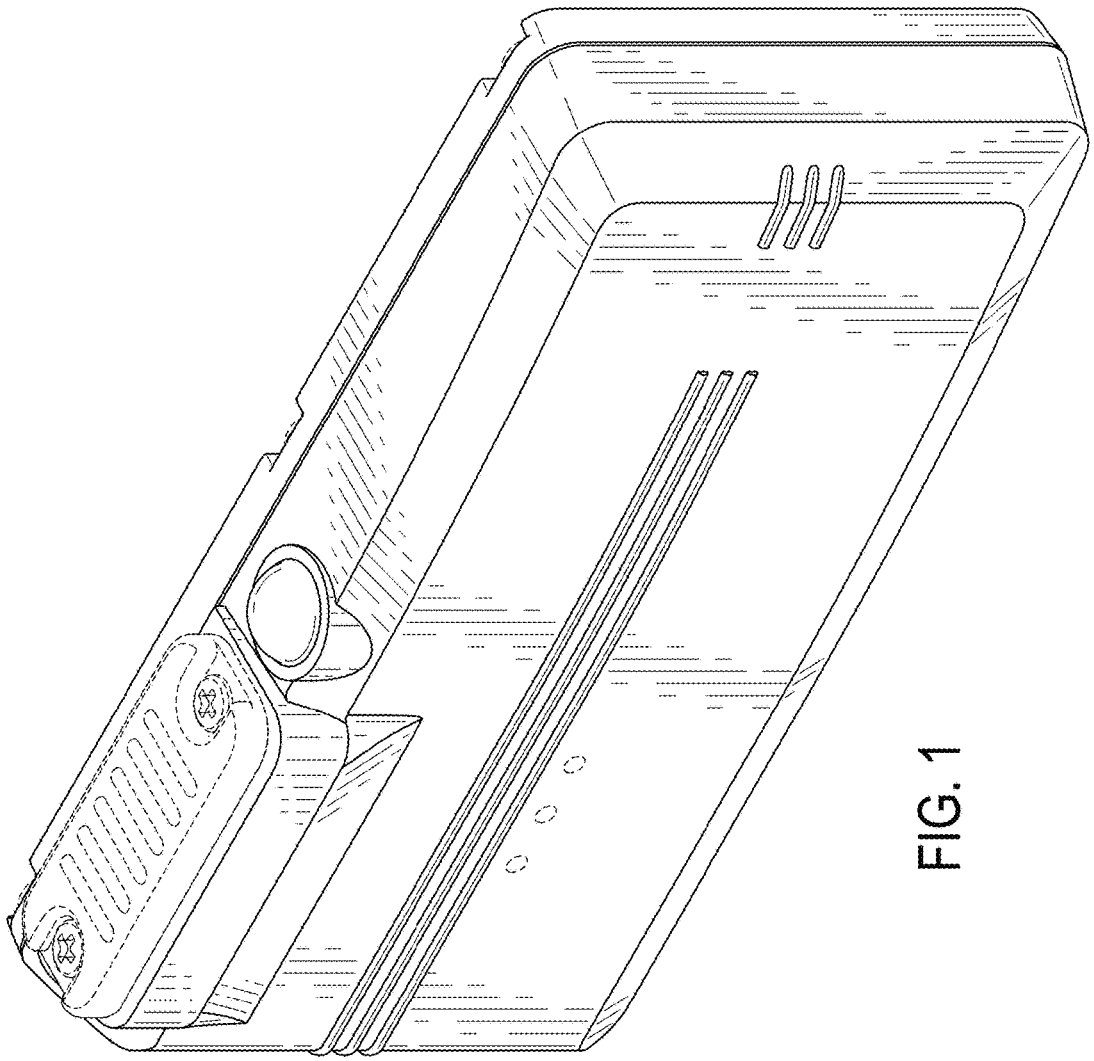

FIG. 1

FIG. 2

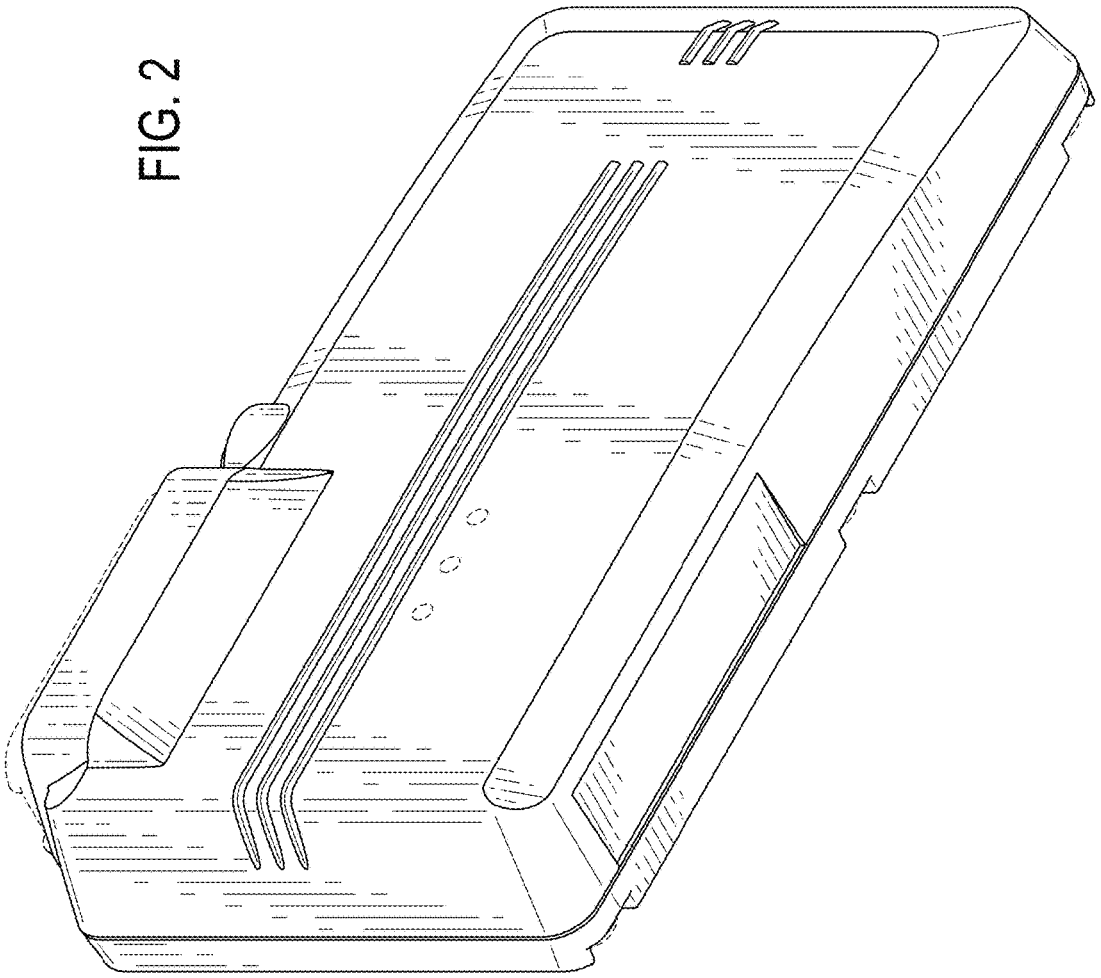

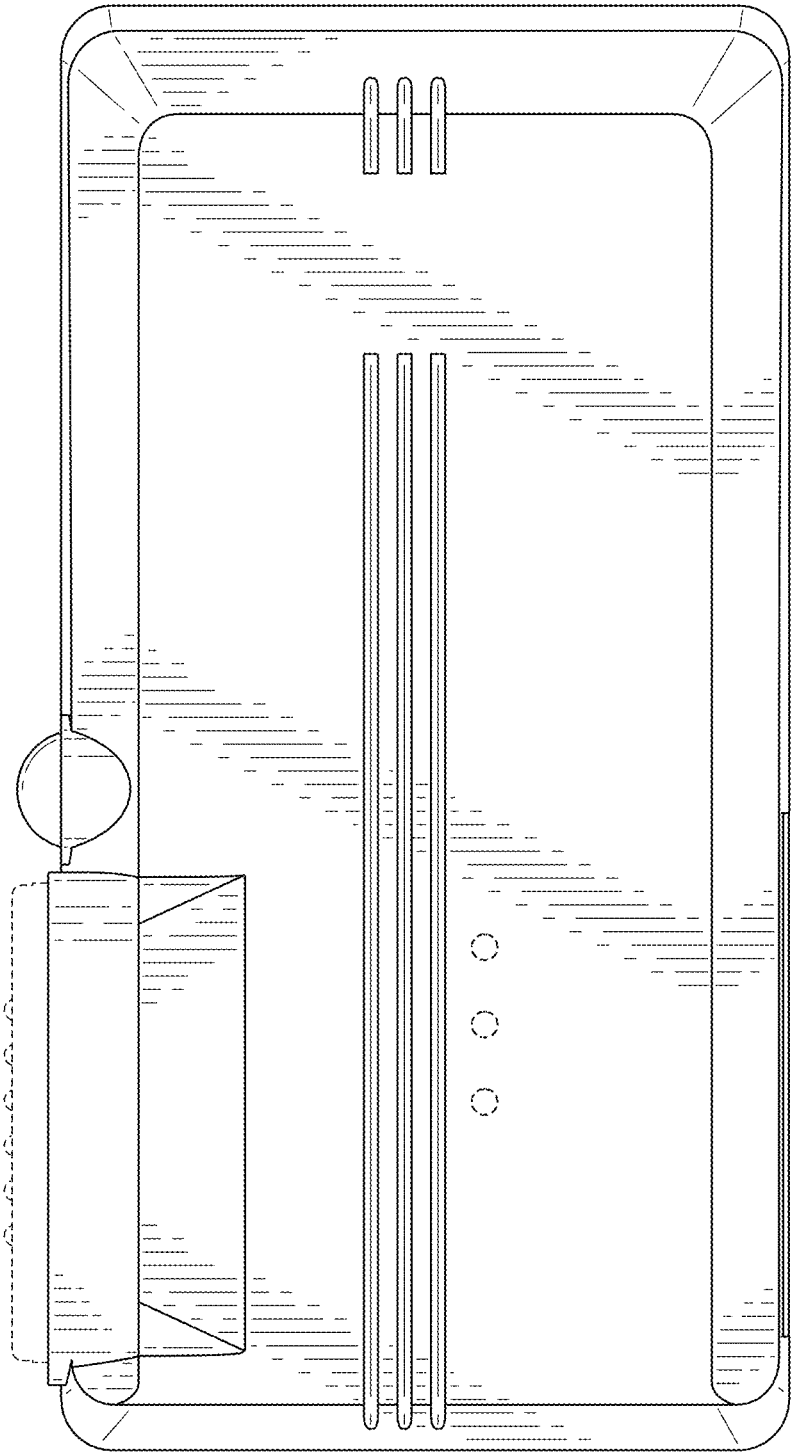

FIG. 3

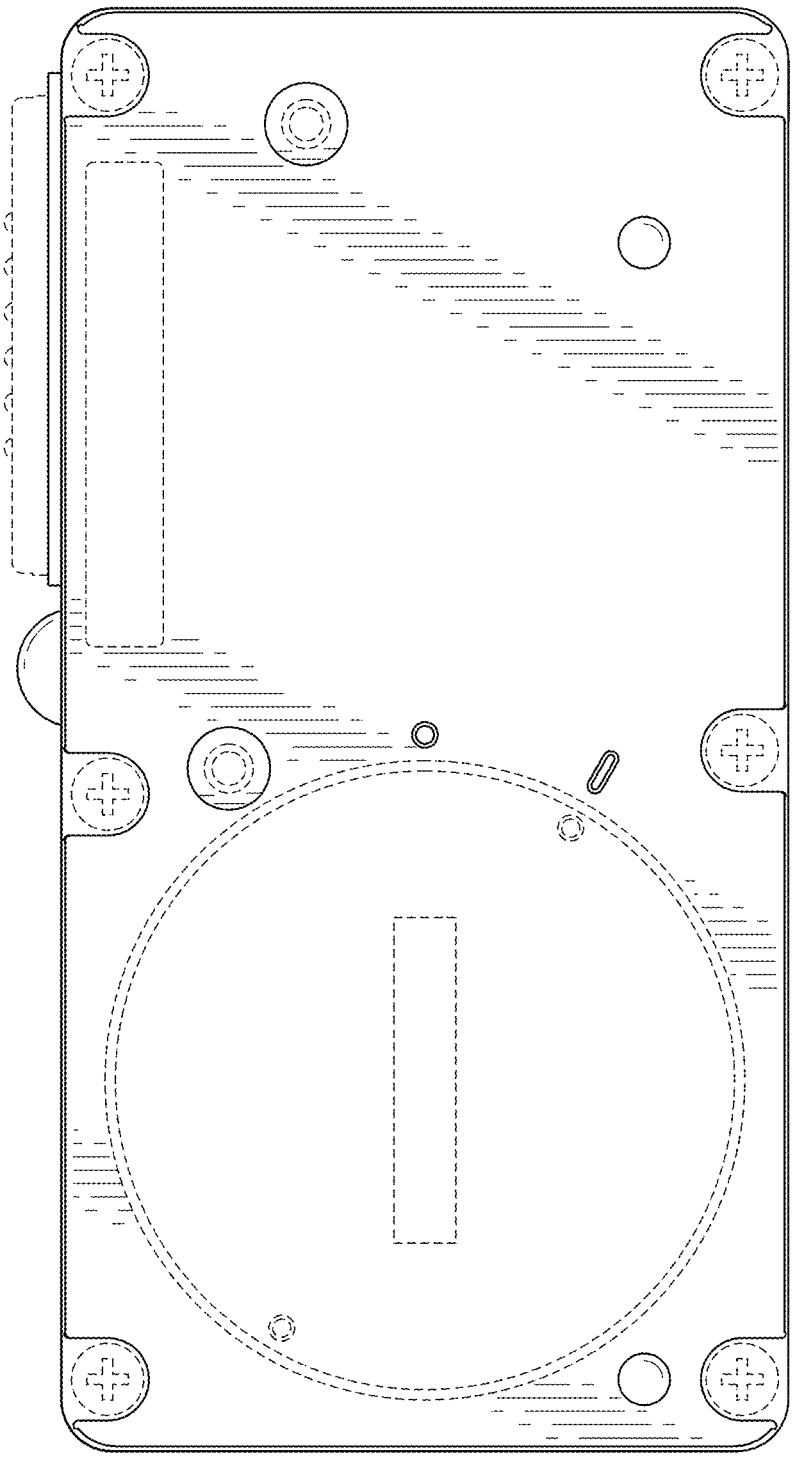

FIG. 4

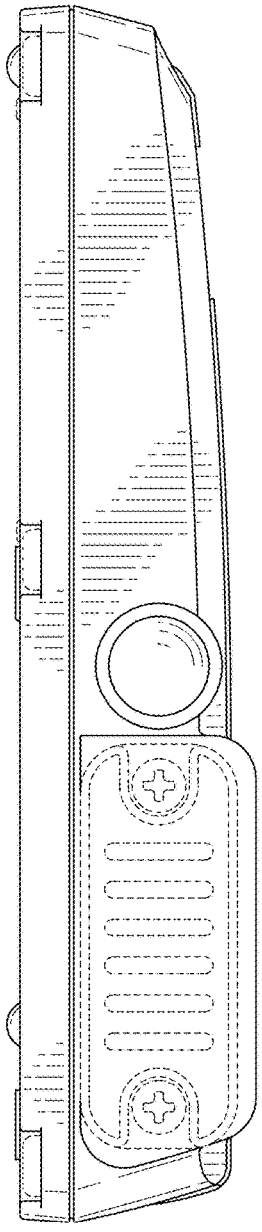

FIG. 5

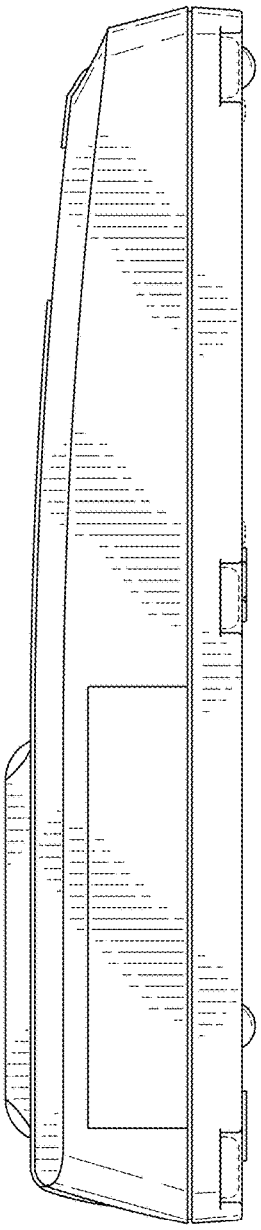

FIG. 6

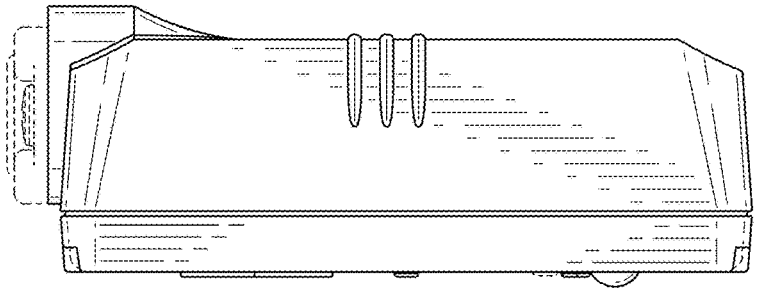

FIG. 8

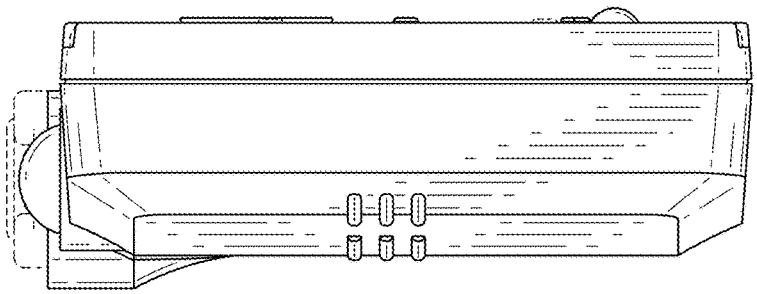

FIG. 7