Jan. 4, 1966 J. H. SCOTT 3,227,440

OPERATING TABLE HAVING A PLURALITY OF BODY SUPPORTING TOPS

Filed March 9, 1962 11 Sheets-Sheet 1

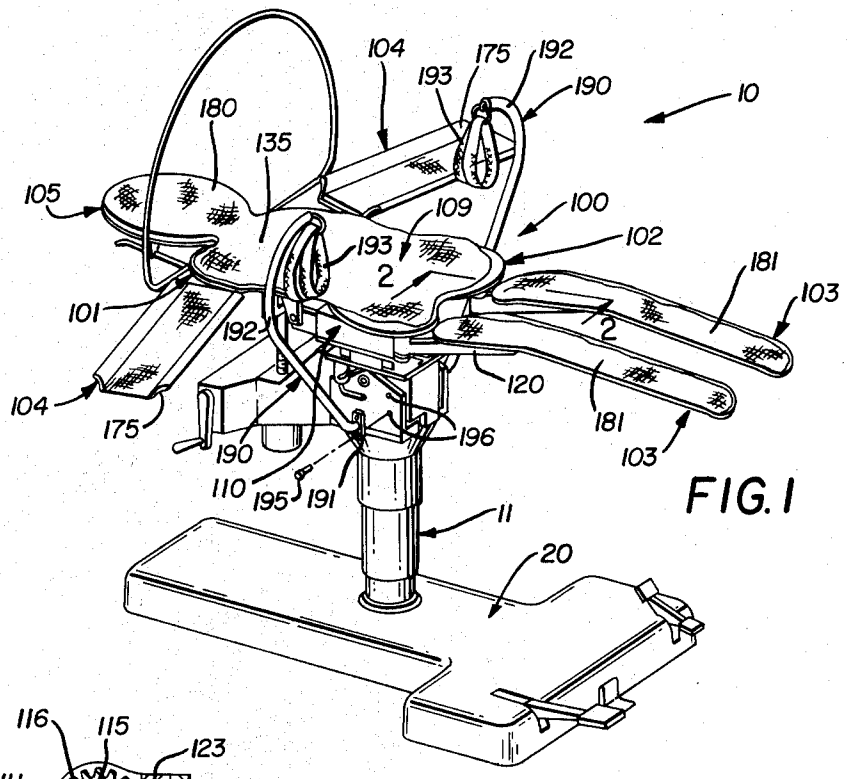

FIG. 1

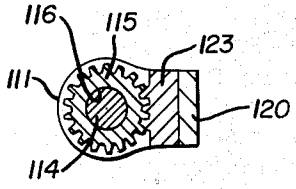

FIG. 3

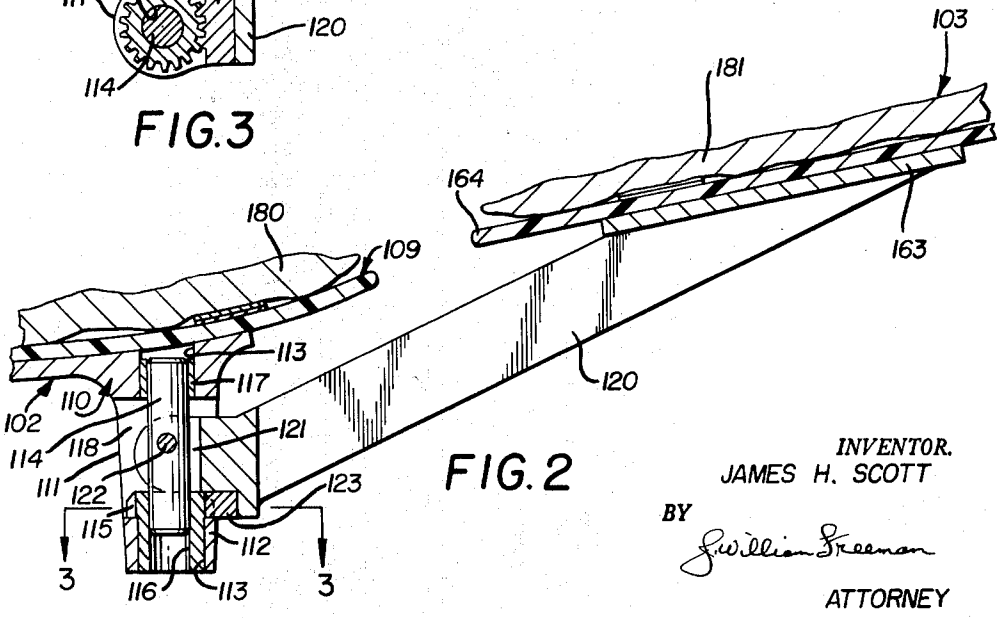

FIG. 2

INVENTOR.
JAMES H. SCOTT

BY
William Freeman
ATTORNEY

OPERATING TABLE HAVING A PLURALITY OF BODY SUPPORTING TOPS

Filed March 9, 1962 11 Sheets-Sheet 2

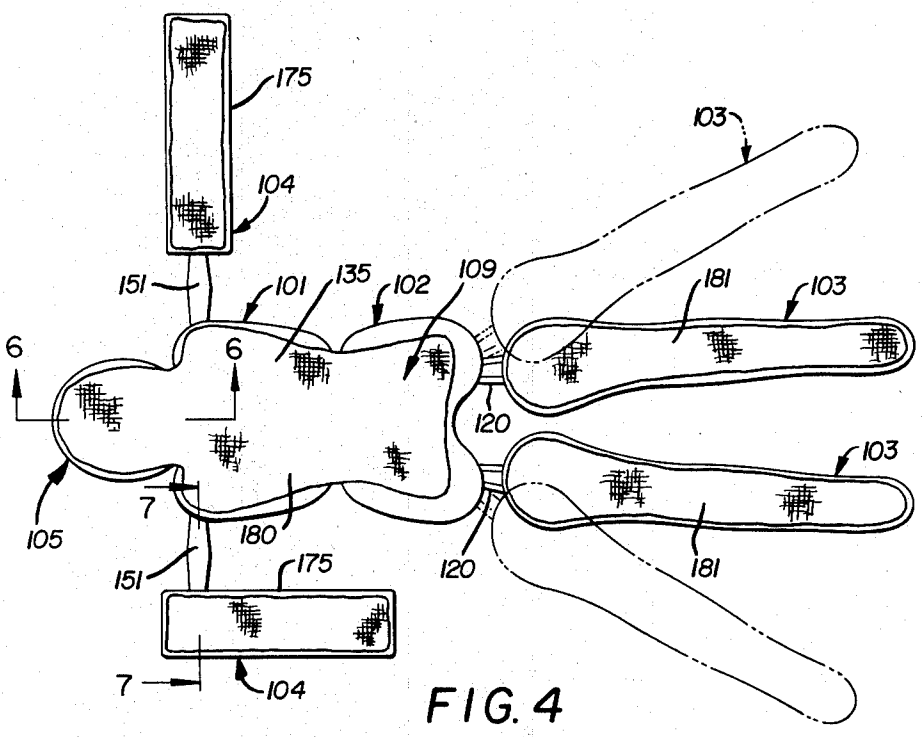

FIG. 4

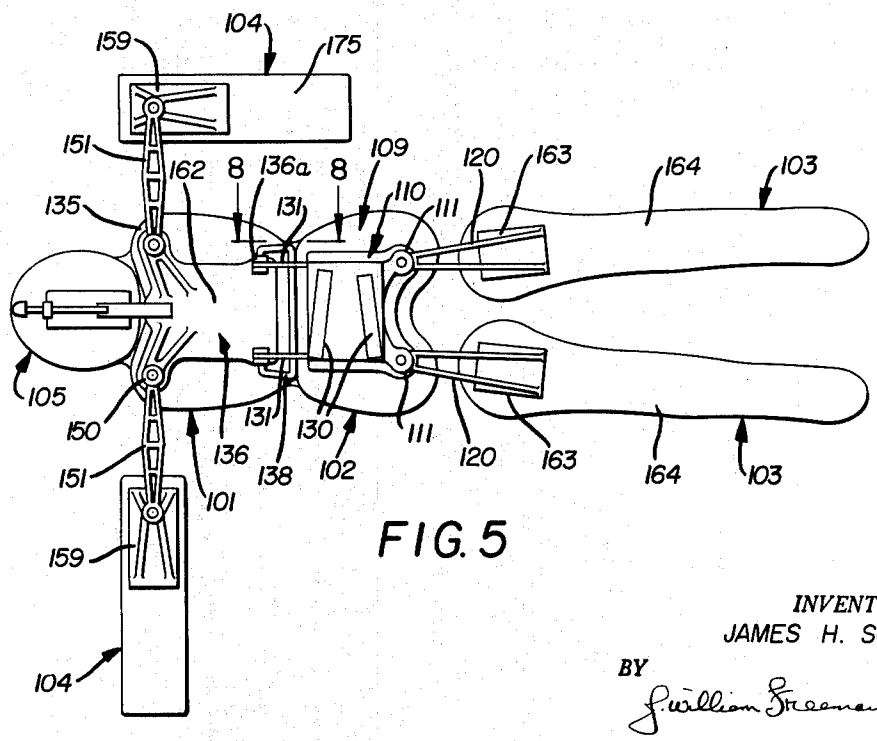

FIG. 5

INVENTOR.
JAMES H. SCOTT
BY
William Freeman
ATTORNEY

OPERATING TABLE HAVING A PLURALITY OF BODY SUPPORTING TOPS

Filed March 9, 1962 11 Sheets-Sheet 3

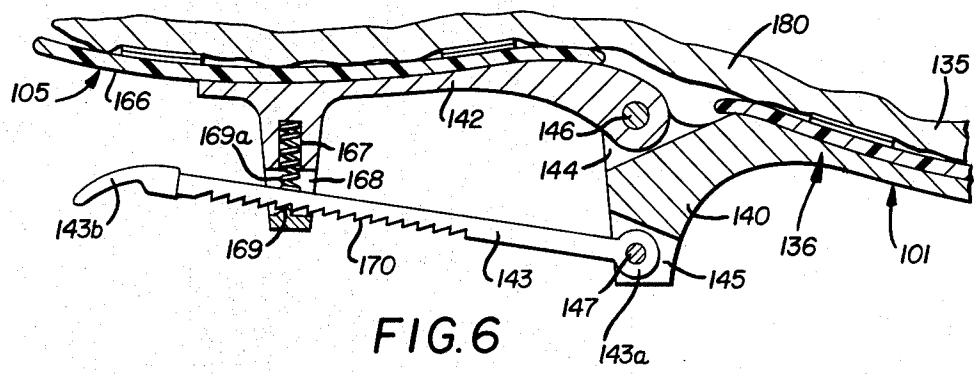

FIG. 6

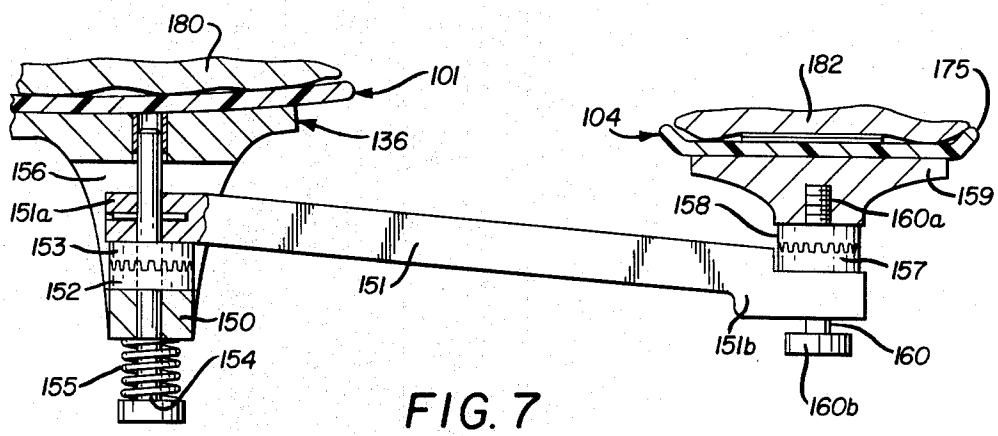

FIG. 7

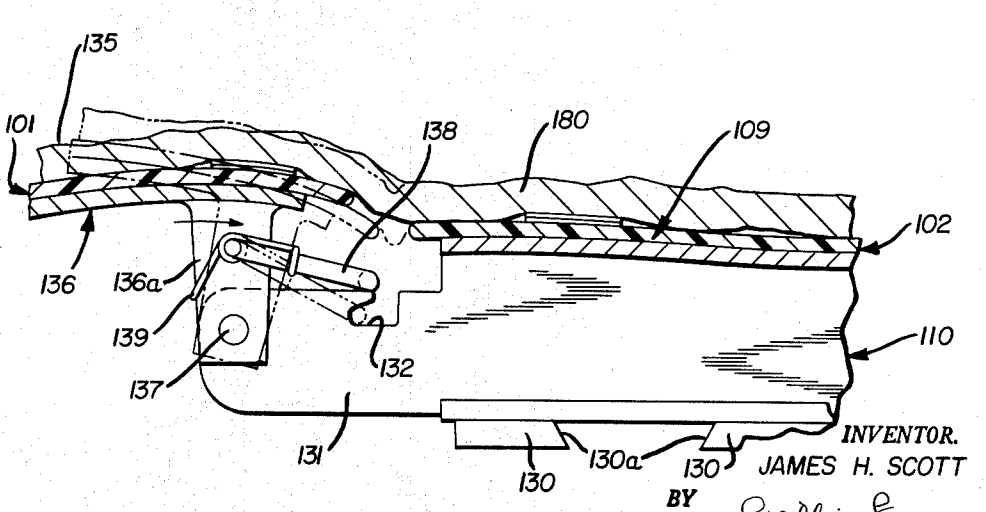

FIG. 8

INVENTOR.
JAMES H. SCOTT
BY
G. William Freeman
ATTORNEY

OPERATING TABLE HAVING A PLURALITY OF BODY SUPPORTING TOPS

Filed March 9, 1962 11 Sheets-Sheet 4

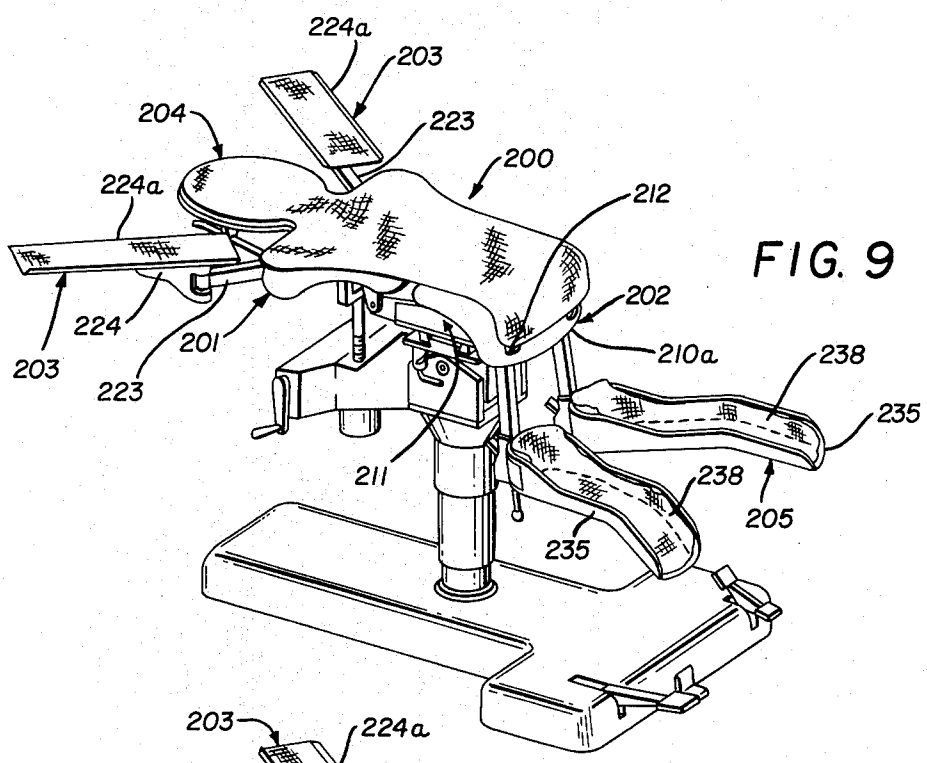

FIG. 9

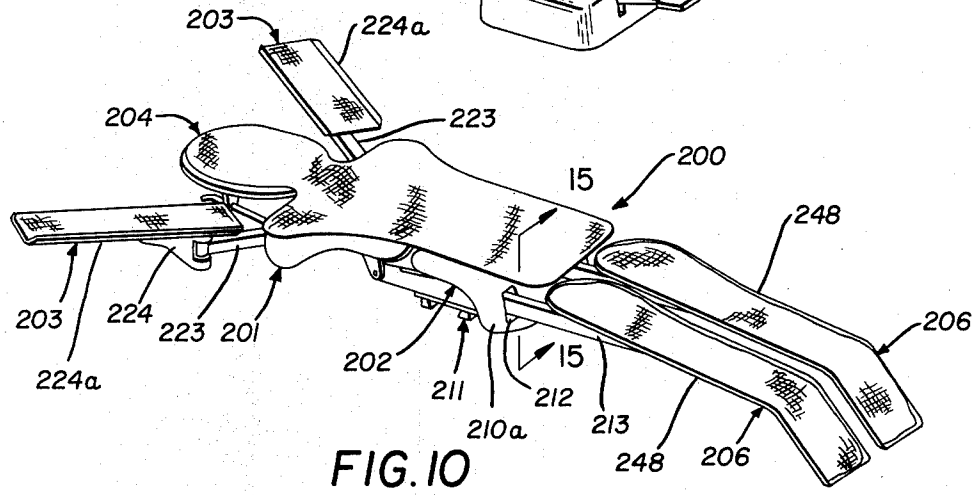

FIG. 10

INVENTOR.
JAMES H. SCOTT
BY J. William Freeman
ATTORNEY

OPERATING TABLE HAVING A PLURALITY OF BODY SUPPORTING TOPS

Filed March 9, 1962 11 Sheets-Sheet 5

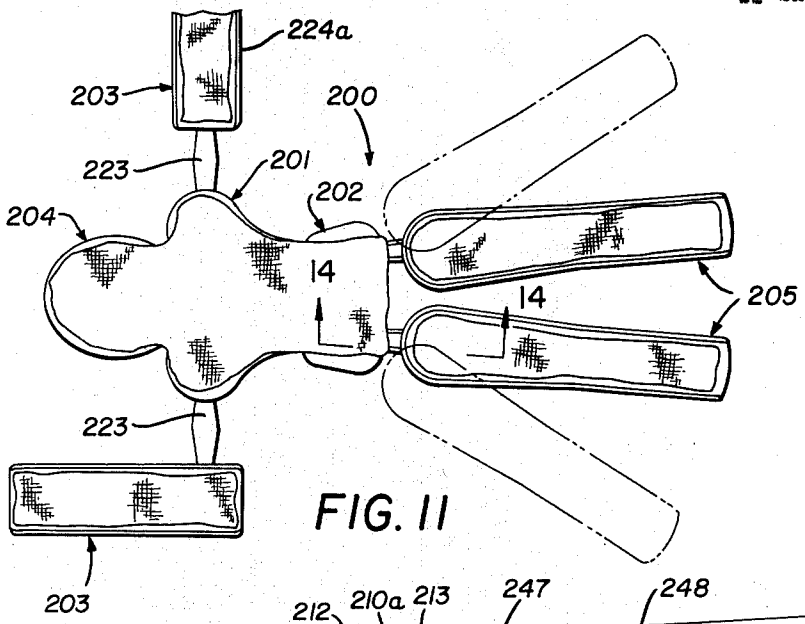

FIG. 11

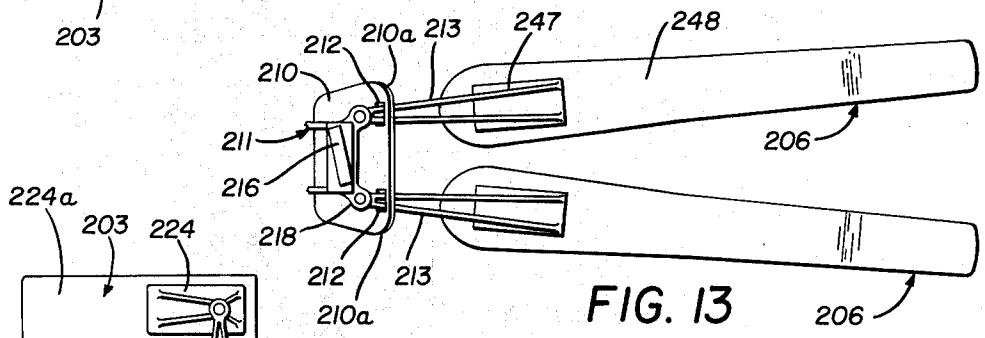

FIG. 13

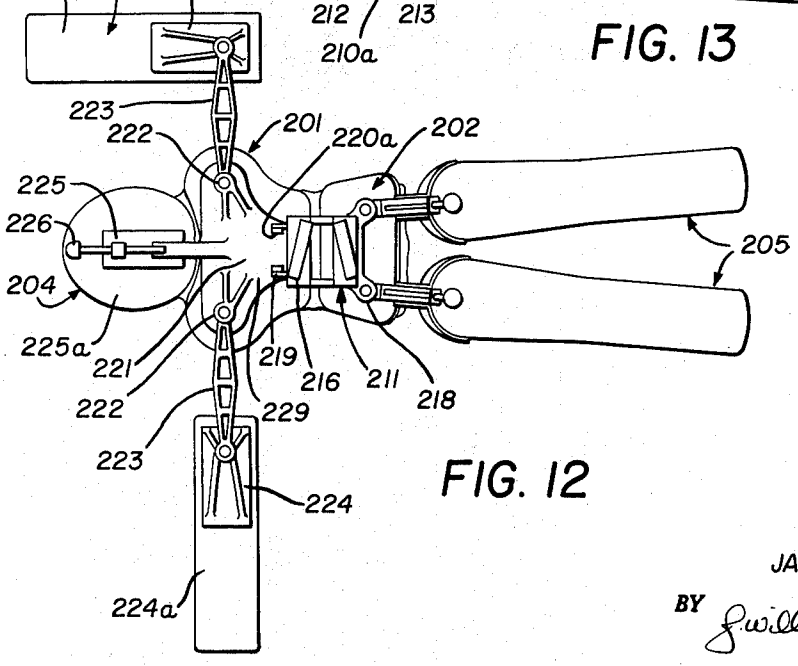

FIG. 12

INVENTOR.
JAMES H. SCOTT

BY William Freeman

ATTORNEY

OPERATING TABLE HAVING A PLURALITY OF BODY SUPPORTING TOPS

Filed March 9, 1962 11 Sheets-Sheet 6

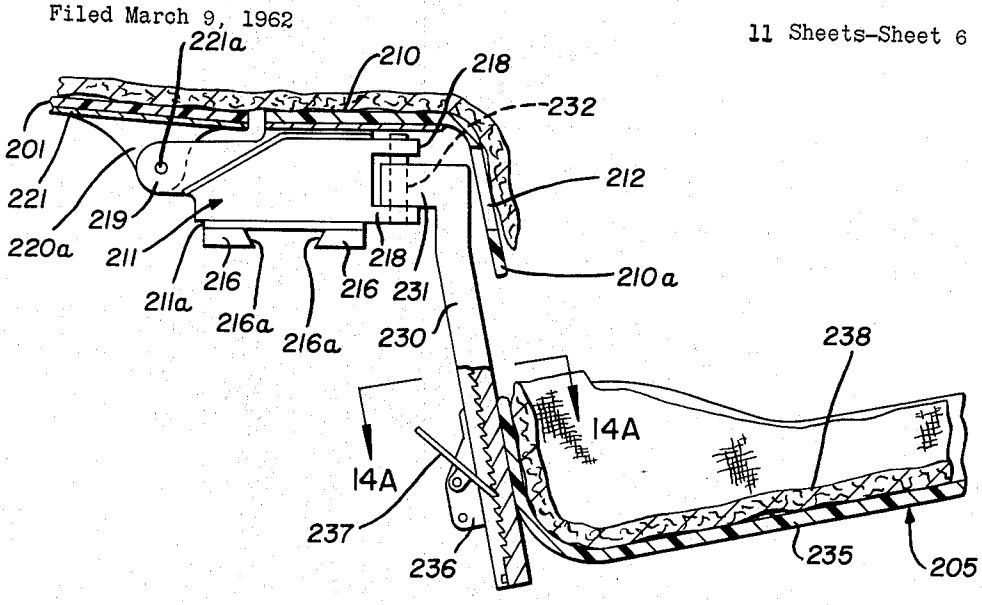

FIG. 14

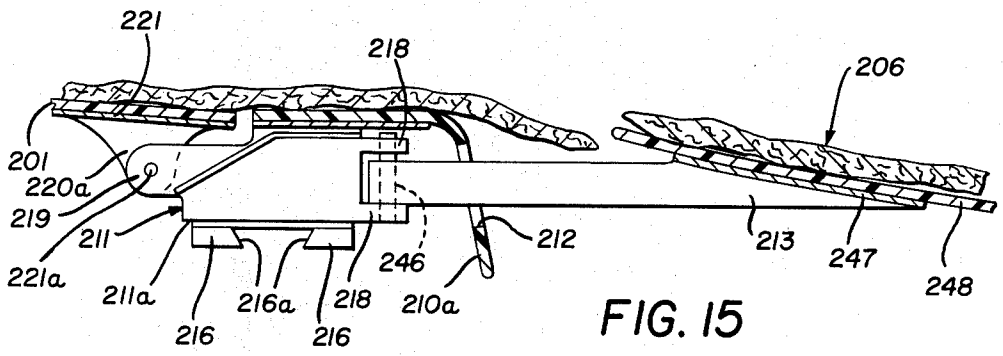

FIG. 15

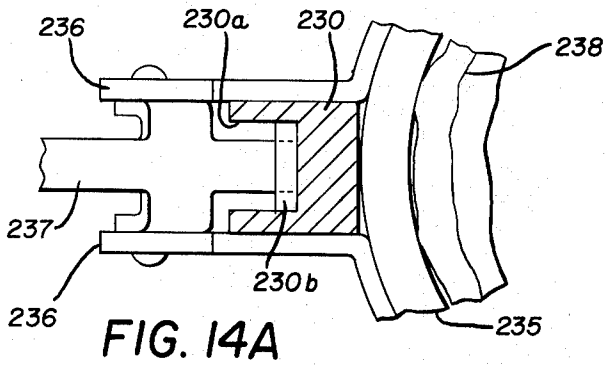

FIG. 14A

INVENTOR.
JAMES H. SCOTT

BY William Greener

ATTORNEY

OPERATING TABLE HAVING A PLURALITY OF BODY SUPPORTING TOPS

Filed March 9, 1962 11 Sheets-Sheet 7

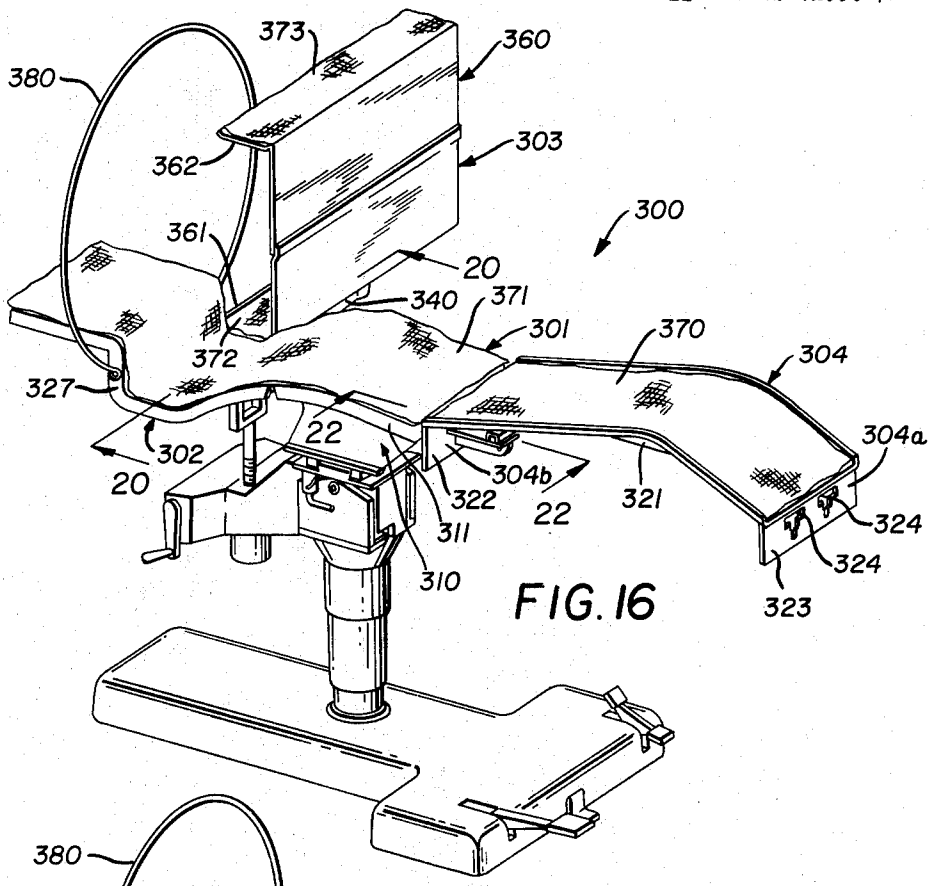

FIG. 16

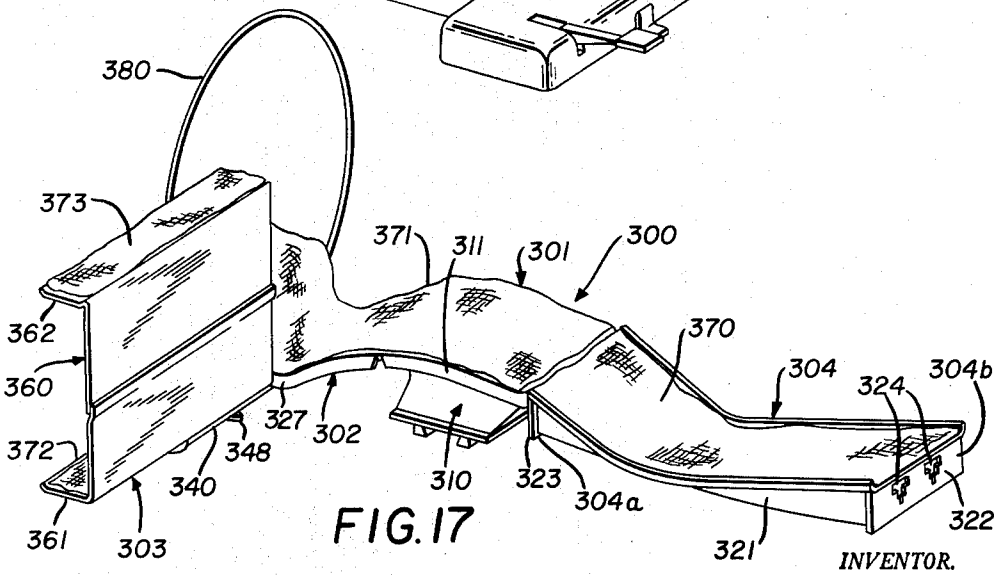

FIG. 17

INVENTOR.
JAMES H. SCOTT

BY George Freeman

ATTORNEY

OPERATING TABLE HAVING A PLURALITY OF BODY SUPPORTING TOPS

Filed March 9, 1962 11 Sheets-Sheet 8

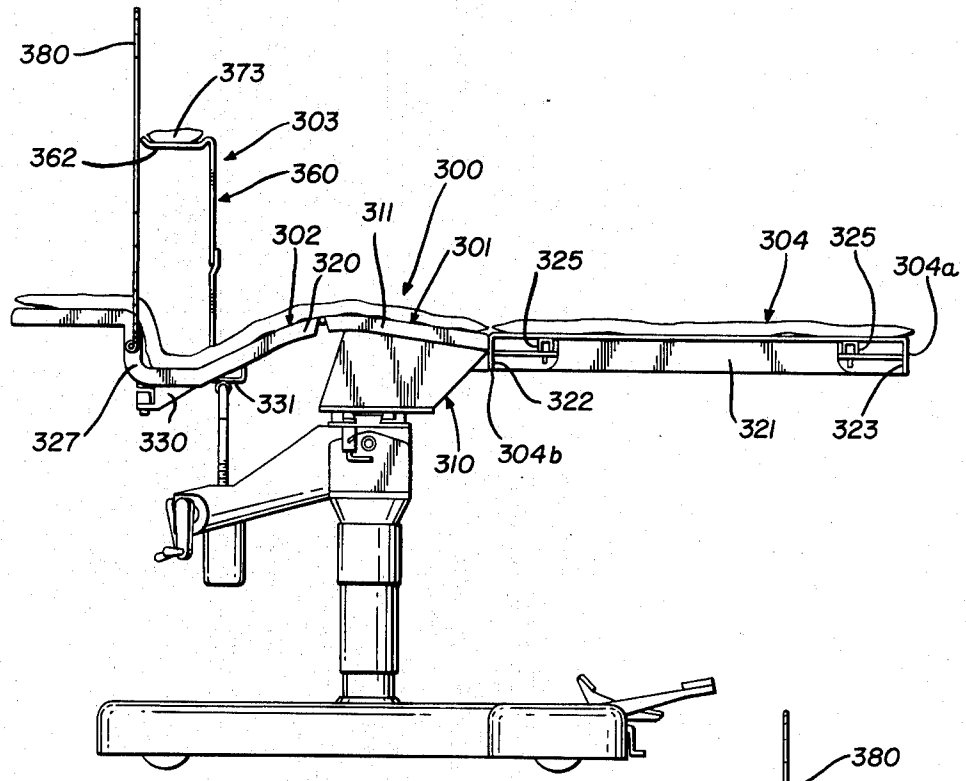

FIG. 18

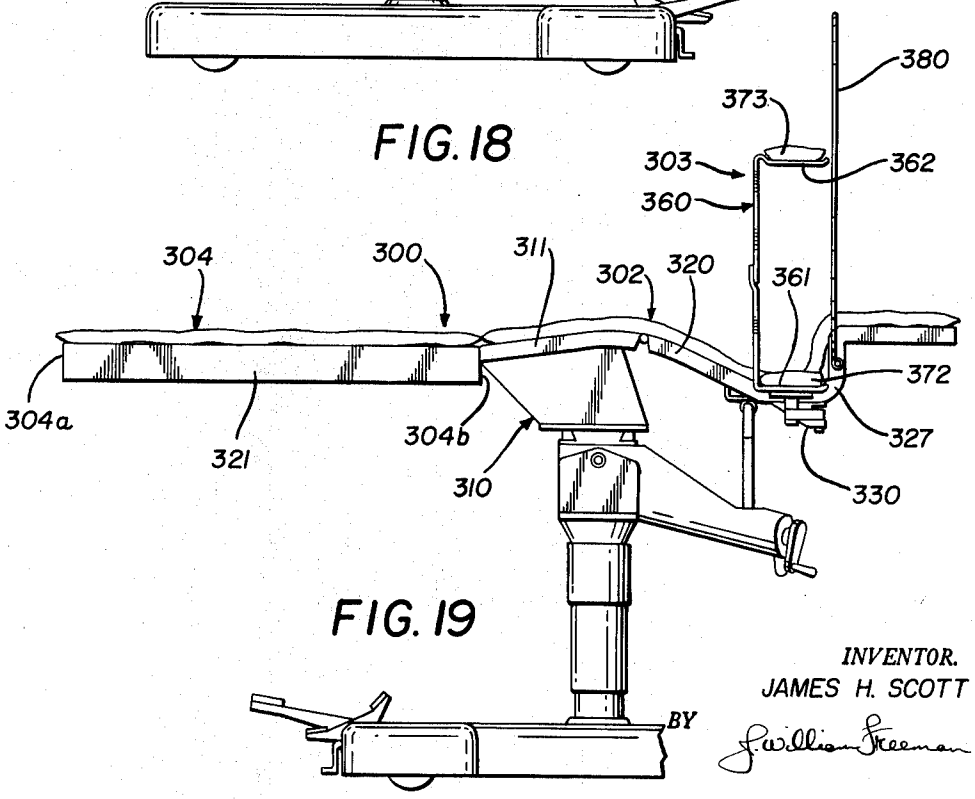

FIG. 19

INVENTOR.
JAMES H. SCOTT
BY
William Freeman
ATTORNEY

OPERATING TABLE HAVING A PLURALITY OF BODY SUPPORTING TOPS

Filed March 9, 1962 11 Sheets-Sheet 9

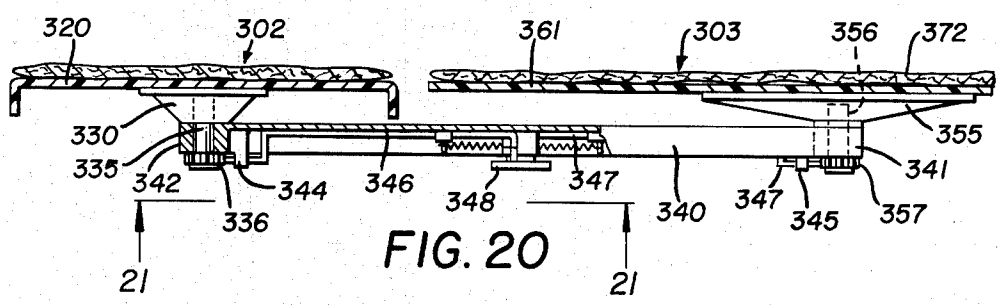

FIG. 20

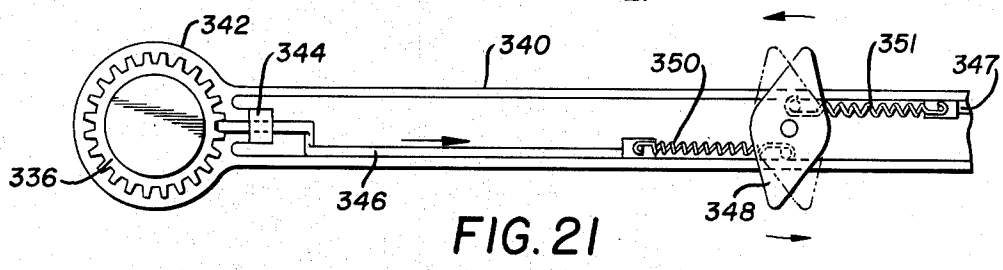

FIG. 21

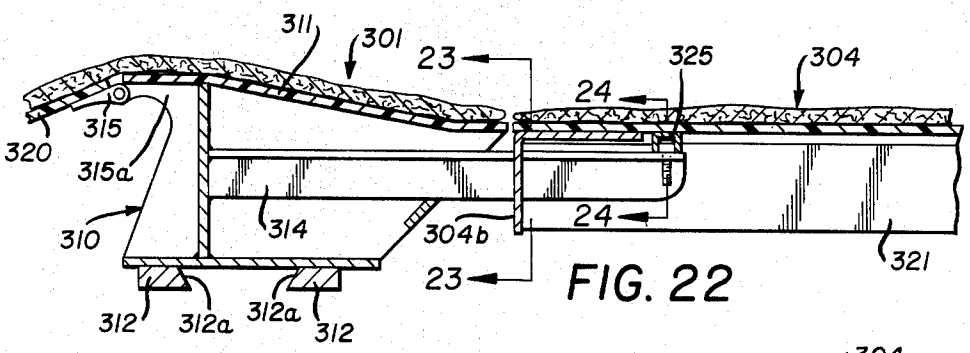

FIG. 22

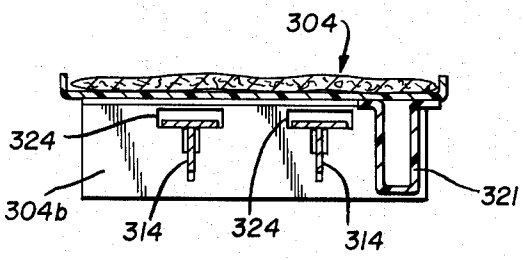

FIG. 23

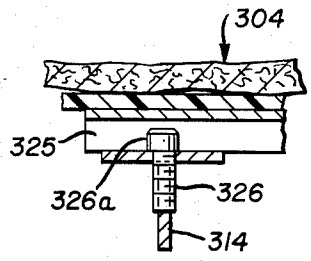

FIG. 24

INVENTOR.
JAMES H. SCOTT

BY J. William Freeman

ATTORNEY

OPERATING TABLE HAVING A PLURALITY OF BODY SUPPORTING TOPS

Filed March 9, 1962 11 Sheets-Sheet 10

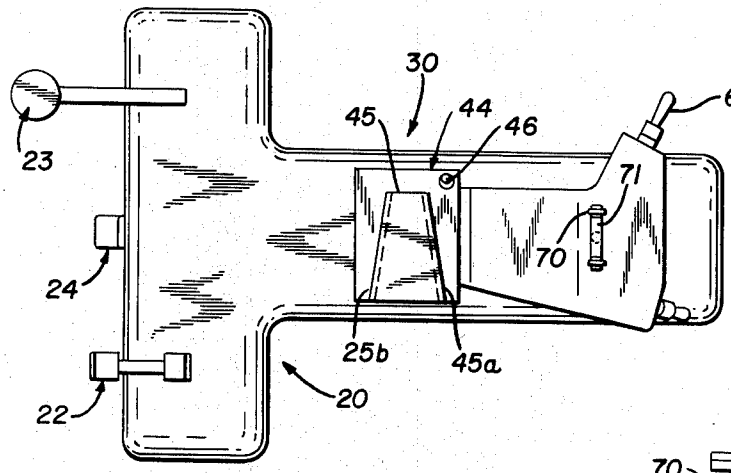

FIG. 25

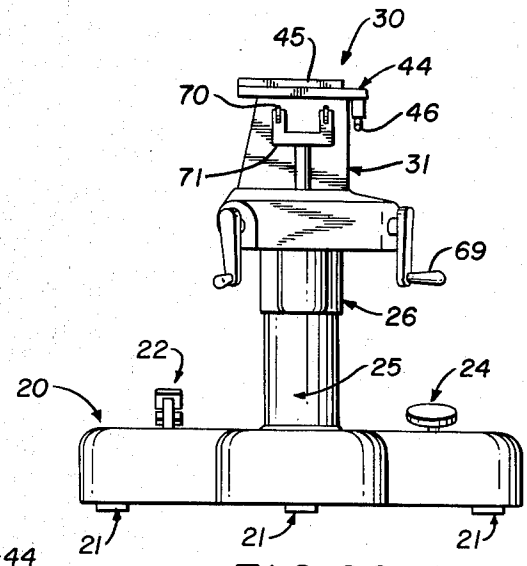

FIG. 26

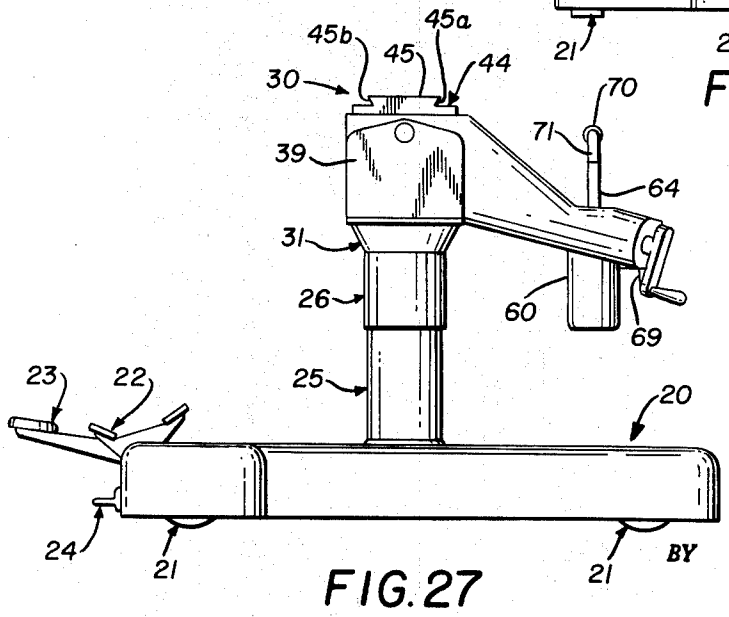

FIG. 27

INVENTOR.
JAMES H. SCOTT
BY
J. William Greenan
ATTORNEY

OPERATING TABLE HAVING A PLURALITY OF BODY SUPPORTING TOPS

Filed March 9, 1962 11 Sheets-Sheet 11

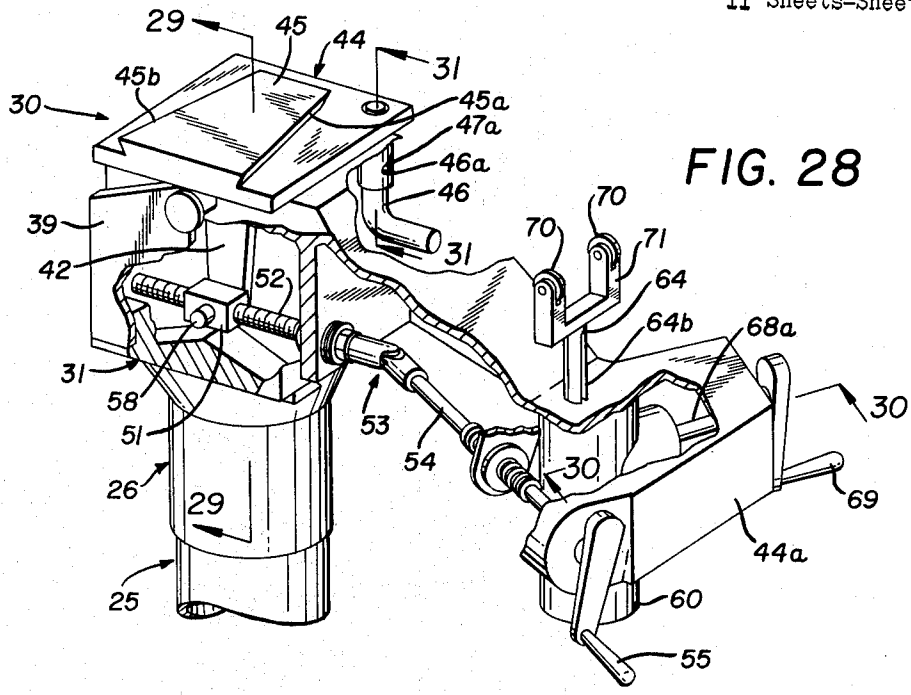

FIG. 28

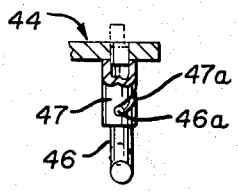

FIG. 31

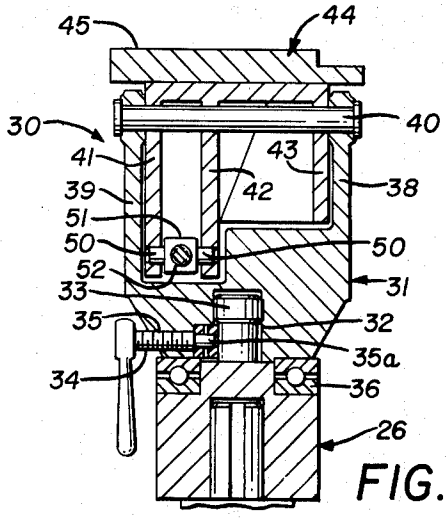

FIG. 29

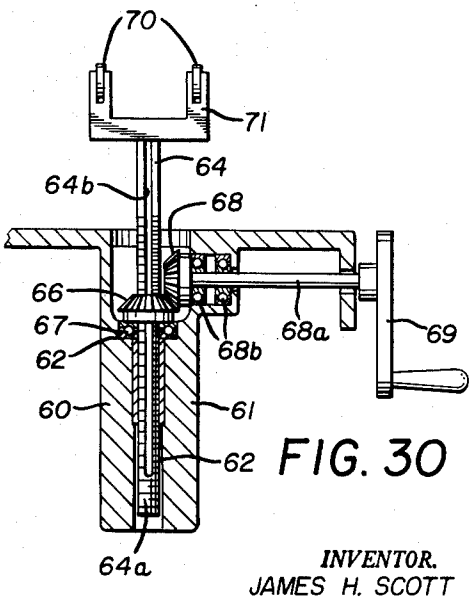

FIG. 30

INVENTOR.
JAMES H. SCOTT

BY

J. William Freeman

ATTORNEY

United States Patent Office

3,227,440

Patented Jan. 4, 1966

1

3,227,440
OPERATING TABLE HAVING A PLURALITY OF BODY SUPPORTING TOPS

James H. Scott, Los Angeles, Calif., assignor to Simmons Company, New York, N.Y., a corporation of Delaware

Filed Mar. 9, 1962, Ser. No. 178,644
38 Claims. (Cl. 269—326)

This invention relates to the art of surgical operating tables and in particular has reference to an operating table that includes a support base that is interchangeably useable with a plurality of separate body supporting tops, with individual tops being provided to provide anatomically contoured support for a human body in the prone, supine and unilateral positions.

In the past, operating tables have been made up, in general, of a plurality of support surfaces arranged contiguously to each other in articulated fashion so as to provide adjustable support for a human body in various positions.

While the articulated construction of the prior art operating table does facilitate surgical operations in a plurality of various positions, it has been the practice in the prior art to use the same table top for all operations, regardless of the position in which the patient is positioned for a particular operation.

Thus, while approximately 75 percent of all operations are performed with the patient positioned on his back in supine position, there are, nonetheless, occasions where prone or unilateral patient position is required for the purpose of proper surgical operating approach.

In the past, operating tables have been compromised in design, with the thought in mind of accommodating a patient in all positions, with no provision being made for the use of separate interchangeable tops that would support the patient in the various requisite operating positions.

Additionally, and because of the limitation that the prior art operating table must support a patient in all operating positions, it has been necessary in the past to make the operating table of sufficient width to support a patient in the various positions required for surgical operations. As a result of this fact, tables of the prior art have been rather large in transverse dimensions so as to limit the approach available to the operating surgeon.

It has been discovered that greatly improved results can be achieved by providing individual operating tops that are respectively and anatomically contoured to firmly support a patient in prone, supine and unilateral position, with the tops being interchangeably engageable with a common pedestal base that serves to move the articulated components of the individualized tops. In basic essence, it is preferred to have each top include an articulated two-piece torso support that is connected in articulated fashion to appropriate leg supports, arm supports and a head support.

The net effect of such contouring of the patient supports is to provide a more even distribution of a patient's weight over a greater surface area.

Thus, on a flat top type of table, there would be no support for the small of the patient's back and other regions, whereas in use of contoured support elements, support for such areas in provided.

Further, it is preferred that the torso supporting portion of each top be connected to two adjustment control means provided on the pedestal base, with the preferred arrangement being that the hip portion of the torso support is connected to a pivotal portion of the pedestal base, while the back or chest portion of the torso support moves either with, or relatively of the hip support portion, dependent upon the operating position that is desired by the operating surgeon.

2

It has been further discovered that such individualized construction further enhances the surgeon's accessibility to the operative area, with the utilization of the three tops eliminating the engineering compromises that were inherent in the single top designs of the prior art and with the three tops being designed to provide maximum accessibility to an infinite number of surgical positions.

As a practical matter, forming of the supporting sections to body conforming contour, is possible because the science of human engineering reveals that the torso dimension of individuals varies only slightly notwithstanding rather considerable differences in height. Thus, the various torsos of persons having various heights can be comfortably supported on the same torso supporting portion of the top with the result that different size table tops are not required for different height individuals.

A combination of this contour supporting with the flexing at the hinge point of the human torso has the further advantage of providing a more comfortable type of patient support during periods when the torso is in flexed condition. Thus, in the contoured flexing arrangement of the instant invention, the hip portion is firmly supported with respect to the legs while the back portion of the torso is flexed by the adjustable back support for example.

By way of contrast, in the prior art, both portions of the torso would be moved relatively of the limbs of the patient to accordingly cause a greater degree of strain on the patient during the operation. By use of the improved principle herein involved, it has been found that such undue strains are materially reduced.

Production of an improved operating table having the above characteristics becomes the principal object of this invention, with other objects thereof becoming more apparent upon a reading of the following brief specification, considered and interpreted in the light of the accompanying drawings.

By way of general introduction to the drawings, the same illustrate the pedestal base being respectively connected to the supine, prone and unilateral tops, with FIGURES 1 to 8 being directed to the use of the supine top, while FIGURES 9 to 15 are directed to the description of the prone top. FIGURES 16 through 24 are similarly directed to the description of the unilateral top, while FIGURES 25 through 31 are detailed with respect to the construction of the pedestal base per se.

Accordingly, FIGURE 1 is a perspective view of the improved operating table having the supine top positioned thereon.

FIGURE 2 is a vertical section taken on the line 2—2 of FIGURE 1.

FIGURE 3 is a horizontal section taken on the lines 3—3 of FIGURE 2.

FIGURE 4 is a top plan view of the supine top per se.

FIGURE 5 is a bottom plan view of the supine top.

FIGURES 6, 7 and 8 are vertical sections taken on the lines 6—6, 7—7 and 8—8 of FIGURES 4 and 5.

FIGURE 9 is a perspective view of the prone top operatively positioned on the pedestal base.

FIGURE 10 is a top perspective view of a prone top having different forms of leg supports operatively associated therewith.

FIGURE 11 is a top plan view of the prone top per se.

FIGURE 12 is a bottom plan view of the prone top.

FIGURE 13 is a fragmentary plan view showing the modified leg supports being operatively associated with the prone top.

FIGURE 14 is a vertical section taken on the lines 14—14 of FIGURE 11.

FIGURE 14A is a section taken on the lines 14A—14A of FIGURE 14.

FIGURE 15 is a vertical section taken on the lines **15—15** of FIGURE 10.

FIGURE 16 is a perspective view of the unilateral top positioned on the pedestal base and having the arm supporting portions thereof extending in one direction for supporting the patient on his left side.

FIGURE 17 is a perspective view of the unilateral top per se, but showing the same arranged for supporting the patient on his right side.

FIGURES 18 and 19 are opposite side elevational views of the unilateral top operatively positioned on the pedestal base.

FIGURE 20 is a vertical section taken on the lines **20—20** of FIGURE 16.

FIGURE 21 is a plan view taken on the lines **21—21** of FIGURE 20.

FIGURE 22 is a vertical section taken on the lines **22—22** of FIGURE 16.

FIGURES 23 and 24 are sectional views taken on the lines **23—23** and **24—24** of FIGURE 22.

FIGURE 25 is a top plan view of the pedestal base per se.

FIGURE 26 is an end elevation of the pedestal base.

FIGURE 27 is a side elevation of the pedestal base.

FIGURE 28 is a fragmentary perspective view of the operating components of the pedestal base.

FIGURES 29, 30 and 31 are sectional views taken on the lines **29—29**, **30—30** and **31—31** of FIGURE 28.

For the purpose of clarifying the description of the improved operating table, it is felt that the best approach can be made by describing the individual tops per se, followed by a detailed description of the pedestal base that is interchangeably associated with all of the tops shown in the preferred form of the invention. Accordingly, a separate description will be undertaken with respect to each of the tops, as well as the pedestal base.

Accordingly, the operating table, generally indicated by the numeral **10**, includes a base **11** that is selectively engageable with either a supine top **100**, a prone top **200** or a unilateral top **300**, depending upon the operation to be performed, with the tops **100**, **200** and **300** each being of articulated construction and each having the position of the torso supporting portions thereof controlled by the operating mechanism of the pedestal base **11**, as will be subsequently described.

THE SUPINE TOP 100

Referring first to FIGURES 1 through 8 of the drawings, the supine top, which has been generally designated by the numeral **100**, includes, as best shown in FIGURES 1, 4 and 5, a back support **101** that is connected, in articulated fashion, to a hip support **102**, with leg supports **103**, **103** being pivotally connected to the hip support **102**, while arm supports **104**, **104** are connected to the back support **101** for the purpose of supporting the patient's arms. A head support **105** projects from one end of the back support **101** for the purpose of supporting the patient's head during the operation.

In this fashion, and as will be described, the operating top **100** is accordingly made up of articulated members **101**, **102**, **103**, **104** and **105** that have been just described.

With regard to the just described components, it should be first noted that the same are anatomically contoured in configuration so as to provide a form fitting type of support for the patient. Thus, and as shown in FIGURE 4, the hip portion **102** is dished to conform to the normal hip contour, while the back support **101** is contoured to a lesser extent to appropriately support the normal back of a patient. Similar contouring of the leg supporting members **103**, **103**, the arm supporting members **104**, **104** and the head supporting member **105** has been provided for as shown best in the perspective illustration of FIGURE 1.

In this fashion, the patient will be comfortably supported on his back, with the individual components of this supine top being contoured so as to snugly envelope the supported areas of the patient in form fitting relationship therewith, thus providing support against transverse shifting which frequently occurs in instances of supporting a patient on a flat top type of table.

Referring now to further details of construction with regard to the just described components, it will first be noted that the hip support **102** includes a contoured body portion **109** that is secured to a supporting casting **110** so as to define the hip support that has been generally designated by the numeral **102**.

For the purpose of coaction with the leg supports **103**, **103**, the casting **110** includes opposed support bosses **111**, **111** (FIGURE 5), with these bosses being intended to pivotally support the leg supports **103**, **103** so that the same may be moved through the approximate plane of the hip support **102** between full and chain-dotted line positions, as shown in FIGURE 4. Referring now to FIGURE 2 for a detailed consideration of the boss members **111**, **111**, it will be noted that the same include a cylindrical projection **112** that is provided with a bore **113** within which a support shaft **114** may be appropriately journaled. Positioned within the lower portion of the bore **113** is a gear **115** that is preferably fixed with respect to the cylindrical portion **112** and that is further provided with an aperture **116** within which the lower end of the shaft **114** may be slidably received, with the upper end of the shaft **114** also being journaled within a sleeve or bushing **117** so as to make the shaft **114** slidable axially with respect to the boss **111**.

For the purpose of connecting with the leg supports, each boss **111** further includes a slot **118** within which the bifurcated end **121** of the support arm **120** may be inserted, with the end **121** being pinned, as by pin **122**, to the shaft **114**. The lower portion (FIGURE 2) of the bifurcated end is undercut to receive a rack insert **123**, with the teeth of the rack insert **123** being designed to mesh with the gear **115**, as best shown in FIGURE 3 of the drawings. In this fashion, when the leg support is in the position of FIGURE 2, the teeth of the gear **115** and the rack **123** are meshed so that rotational movement of the shaft **114** with respect to the boss **111** is prevented. However, when it is desired to rotate the leg support **103**, it is merely necessary that the same be lifted to elevate the shaft **114** with respect to the boss **111** and at this time the teeth of the gear **115** and the rack **123** become disengaged so as to allow rotational movement of the leg supports **103**, **103** between the full and chain-dotted line positions of FIGURE 4.

In addition to the bosses **111**, **111**, the support plate **110** further includes a pair of wedge blocks **130**, **130** that converge towards each other for the purpose of becoming interlockingly engaged with a keystone type of key alignment that is provided on the pedestal base **11**, with these wedge blocks **130**, **130** having tapered edges **130*a***, **130*a*** (FIGURE 8) so as to prevent vertical (FIGURE 1) disengagement when the same have been locked in place as will be described.

To the end of effectuating articulated connection, with the back support **101**, the supporting casting **110** further includes projecting arms **131**, **131** (FIGURES 5 and 8) that are provided with a notch type of recess **132**, with the notch **132** serving to limit rotational movement between the members **101** and **102**.

Considering next the detailed construction of the back support **101**, it will first be noted that the same is again of conventional construction so as to include a contoured and/or laminated body portion **135** that is bonded or otherwise secured to a rigid support casting or plate **136** that is appropriately contoured for articulated connection with respect to the component parts **102**, **103**, **104** and **105**.

To this end and referring first to FIGURE 8, articulated connection with respect to the hip support **102** is effectuated through the use of depending support arms **136*a***,

136*a*, arranged in pairs at opposed corners of the plate 136 so as to pivotally connect with the arm members 131 through the medium of a pin 137. An arm 138 of generally U-shaped configuration has the free ends of the leg portions thereof pivotally connected to the outermost arm members 136*a*, 136*a* so as to extend transversely over the arms 131, 131, with the base portion of the member 138 being intended to be positionable in the slot 132 during periods of top storage so as to lock the members 101 and 102 against inadvertent pivotal movement with respect to each other, with spring 139 urging the member 138 towards the chain-dotted line position of FIGURE 8 by virtue of its biased connection between the members 136*a* and 138. In this fashion, the base of the locking member 138 will normally ride on the top face of the arm 131 so as to permit controlled articulation between the members 101 and 102, but will snap into locked position upon mere lifting of the member 101 into the chain-dotted line position of FIGURE 8.

For the purpose of achieving articulated connection with respect to the head support 105, the support plate 136 is further contoured, as shown in FIGURES 5 and 6, to provide a support boss 140 that serves as a pivotal support for (1) both the support casting or plate 142 and (2) a control arm 143, with the boss 140 being slotted, as at 144 and 145, for this purpose. In this regard, the walls of the slot 144 support a pin 146 about which the support plate 142 can be journaled, while a second pin 147 is carried in the slot 145 for the purpose of being journaled within the eyelet end 143*a* of the support arm 143 as shown in FIGURE 6.

The remaining support components of the support plate 136 include opposed bosses 150, 150 that serve, in general, to provide pivotal support for the arm supports 104, 104 with this pivotal connection being best shown in FIGURES 5 and 7 of the drawings.

Accordingly, and as shown in FIGURE 7, the bosses 150, 150 are each provided with a fixed gear element 152, while a similar fixed gear element 158 is provided on each support plate 159 of the arm supports 104, 104. An elongate arm 151 pivotally interconnects the plate 136 with the plate 159 by having its ends provided with gears 153 and 157 that are intended to respectively mesh with gears 152 and 158, with bolt 154 pivotally journalling one end 151*a* of the arm 151 with respect to boss 150, while bolt 160 journals the remaining end 151*b* of arm 151 with respect to support plate 151 by virtue of the threaded end 160*a* of bolt 160 being received in a tapped opening in plate 159. A spring 155 normally urges the gears 152 and 153 into registry as shown in FIGURE 7. In this fashion, while the gear members 152 and 153 are normally urged into registry by spring 155, but the same can be separated by lifting the arm end 151*a* within the confines of the slot 156 that is provided in each boss member 150, as clearly shown in FIGURE 7 of the drawings. A similar type of connection is effectuated between the remaining opposed end 151*b* of each arm 151 and the plate 159, with this detail being shown best in the right-hand portion of FIGURE 7 of the drawings where gear elements 157 and 158 are shown gravitationally engaged in registry, with the gear element 157 being fixed with respect to the arm end 151*b*, while gear 158 is fixed with respect to support plate 159. To facilitate rotational adjustment at this point, clearance is provided between the head portion 160*b* of bolt 163 and the lowermost surface (FIGURE 7) of end 151*b* so as to facilitate disengagement between gears 157 and 158 to thus permit rotational movement.

The remaining detail to be noted with respect to the construction of the support plate 136 is that the same includes a flat area generally designated by the numeral 162 (FIGURE 5), with this flat area being intended to engage with an appropriate roller element of the pedestal base and thus provide a support surface for controlling the articulated connection between these just described components.

With regard to the detailed construction of the individual leg supports 103, 103, it has been previously indicated that the same are pivotally connected with respect to the hip support 102 through the medium of the pivotal arms 120, 120 and if reference will be made to FIGURE 2, it will be noted that the arm 120 connects to a support casting or plate 163 that, in turn, is connected to the contoured body support portion 164 that defines each leg support 103.

Similarly, the head support 105 has been indicated as including a support casting or plate 142 that is pivotally mounted with respect to the support casting or plate 136.

With regard to the details of such construction and referring to FIGURE 6, it will be noted that the support plate 142 connects to a contoured body portion 166 that provides support for the patient's head as previously noted. Additionally, the plate 142 further includes a boss 167 that is provided with a slot 168 having a tooth 169 provided therein, with the tooth 169 being adapted to be selectively engaged with the teeth 170 that are provided on the arm 143 with spring 169*a* urging the tooth 169 into registry with teeth 170. Thus, the head support 105 can be retained in any condition of pivotal relationship with respect to the back support 101 by mere manipulation of the arm 143 by its handle portion 143*b*.

With regard to the detailed construction of the arm supports 104, 104, it has been previously noted that the same include the support casting or plate 159 (FIGURE 7), with it now being noted that these support plates 159, 159 are appropriated bonded or otherwise connected to the body members 175, 175.

In the preceding description, the term "support plate" and "body portions" has been used extensively, and it is to be understood in this regard that the individual body portions are preferably formed from plastic material reinforced with fiberglass or other equivalent material that is in turn reinforced by the support plates to provide a rigid support. For patient's comfort, flexible pads may be provided over the various body portions, with a pad 180 covering the support members 101, 102 and 105, while pads 181, 181 cover the leg supports 103, 103. Pads 182, 182 similarly cover the body portion of the arm supports 104, 104.

THE PRONE TOP 200

The prone top 200 is shown in FIGURES 9 through 15 of the drawings and is provided for the purpose of supporting a patient in prone or face down position, with two alternate positions of patient support being provided in this regard in connection with the prone top 200. On this point, FIGURE 9 indicates the option of a prone top wherein the patient is, in effect, in prone kneeling position. In FIGURE 10, alternate leg supports are provided to position the patient in substantially flat prone position. It follows that the one leg support of each type could be used so that one leg would be in kneeling position while the other would be in straight or extended position.

Referring first to FIGURES 11, 12 and 13, the prone top 200, in general, includes a chest support 201, an abdominal support 202, arm supports 203, 203, a face support 204, and leg supports 205, 205 (FIGURES 9, 11, 12 and 14) or 206, 206 (FIGURES 10, 13 and 15) with the aforesaid components being joined together in articulated fashion to define the top 200 as will now be described.

Accordingly, and considering first the abdominal support 202, the same is shown as including an anatomically contoured body portion 210 that is connected to and reinforced by a support casting or plate 211, with the body portion 210 having a depending flange portion 210*a* that is provided with openings 212, 212 through which arms 213, 213 (FIGURES 13 and 15) may pass for the pur-

pose of pivotally connecting the leg supports **206, 206** with respect to the support plate **211**, as will be described.

With reference to the detailed construction of plate **211**, it will be first noted that the same is of box like construction so as to have its lower face **211***a* provided with tapering guide blocks **216, 216** that complementally engage a tapered block provided on the pedestal base, with each block **216** having a tapered surface **216***a* so as to obviate the possibility of disengagement between the top and the base when the same are positioned in interlocking relationship as shown in FIGURE 9.

The support plate **211** further has projecting spaced support arms **218, 218** that are appropriately bored to receive the connector pin of any of the leg supporting elements **205, 205** or **206, 206**. Additionally, the support plate **211** further includes a pair of parallel projecting arms **219, 219** that receive therebetween a boss portion **220***a* that is defined by the support casting or plate **221** of the chest supporting element **201**, with these members **219** and **220***a* being rotatably connected by pin **221***a* as shown best in FIGURES 14 and 15 of the drawings.

Referring next to FIGURE 12, the support plate **221** further includes bosses **222, 222** that pivotally support arms **223, 223**, with arms **223, 223** in turn being pivotally attached to support castings or plates **224, 224** that serve to reinforce the contoured body portion **224***a* of each arm support **203**.

In this regard, the articulated connection of each arm **223** with respect to each boss **222** and each support plate **224** conforms preferably to the type of articulated connection shown in connection with the prone top and previously described in connection with FIGURES 1 through 7 of the drawings. Accordingly, redescription of the component elements will not be undertaken at this point, with it sufficing to say that the arm **223** pivots relatively of both the boss **222** and the support plate **224** so as to be positionable in an infinite number of supporting positions.

By like token, the head support **204** has a support casting or plate **225** that is pivotally connected to the support plate **221** in the exact same fashion as was the case in connection with the head support **105** previously described in FIGURES 5 and 6 of the drawings with a contoured body portion **225***a* being secured to the plate **225** as was previously the case. It suffices here to say that movement of the handle **226** facilitates pivotal movement of the head support **204** relatively of the chest support **201**, with the handle serving to lock the head support **204** in any desired position of pivotal relationship with respect to chest support **201**. A flat surface **229** (FIGURE 12) is provided for engagement with control elements of the pedestal base as will be described.

Turning next to a detailed description of the leg supports **205, 205** that are shown in FIGURES 9, 11, 12 and 14 of the drawings, it will first be noted that each leg support includes an elongated arm **230** that has an enlarged end **231** within which a pin **232** is fixed, with the pin **232** having its ends receivable in the apertures provided in the support arms **218, 218**.

The elongate arm **230** further has an elongate groove **230***a* (FIGURES 14 and 14A) that is provided with a plurality of teeth **230***b*, **230***b*, that extend longitudinally of the slot **230***a* as shown in the drawings. The contoured body portion **235** of the knee supporting member has a rigid housing **236** secured thereto and projecting from the frontal edge thereof as shown in FIGURE 14, with this housing **236** being of appropriate size and configuration so as to telescopically encircle the arm **230** and thus be slidable relatively thereof in an axial direction, with locking of the unit in place being effectuated by the use of a spring loaded dog member **237** that is pivotally secured to the housing **236** as clearly shown in FIGURE 14 of the drawings.

Thus, the patient's knee can be positioned on the pad **238** of the contoured body support **235** and properly adjusted relatively of the arm **230** by merely sliding the same upwardly until the proper position is reached with locking in place of the unit automatically occurring by virtue of the connection of the end of dog member **237** with the teeth **230***b*.

With regard to the detailed construction of the leg supports **206, 206** that are shown in FIGURES 10, 13 and 15, it has been previously noted that each includes an elongate arm **213** that has a pin **246** secured therewith so as to be insertable in the openings provided in the support arms **218, 218**. The arm **213** further connects to a support plate **247** that, in turn, provides reinforcing for the elongate contoured leg supporting body portion **248**.

With regard to the insertion and removal of any of the leg supporting members above described, it has been previously indicated that each such element includes a pin member, with the pin **232** being described in connection with each leg **205**, while a pin **246** is shown for each leg support **206**. It will be noted that clearance is provided in each instance between the arm and further that the pin in question projects beyond both faces of the supporting arm **230** or **213**.

In this fashion, the main arm of either leg support can be lifted and one end of the pin disengaged, followed by removal of the other end of the pin, with the parts normally being retained in place by gravity and patient weight when positioned as shown in FIGURES 14 and 15.

THE UNILATERAL TOP 300

The unilateral top **300** shown in FIGURES 16 through 24, is designed for the purpose of supporting the patient on either side and, accordingly, the drawings have been made with the purpose in mind of illustrating how the unilateral top **300** can be used to support the patient on either the right or left side, depending upon the operative site in question.

Accordingly, and referring to FIGURE 16, the unilateral top **300** is shown aranged to support a patient on his or her left side, while in FIGURE 17 the top **300** is arranged opposite hand so as to support a patient on the right side.

With regard to the general construction of the unilateral top **300**, it will be first noted that the same is made of articulated construction so as to include a hip support **301**, a chest or upper side support **302**, an arm support **303** and a leg support **304** with the arm support **303** and leg support **304** being reversible in position so as to support the patient on either side as desired.

Referring first to FIGURES 18, 19 and 20, the hip support **301** is shown as including a fabricated support casting or frame **310** that connects to the contoured body portion **311** so as to provide support for the hips of the patient during positioning on the top **300**. The support frame **310** includes, as before tapering guide ways **312, 312** that have tapered faces **312***a*, **312***a* (FIGURE 17) for engagement with a component of the pedestal base in interlocking relationship therewith. Further, the supporting member **310** includes projecting, rigidly mounted support arms **314, 314** that are preferably T-shaped cross-sectional configuration (FIGURE 23) so as to releasably support the leg supporting element **304**, as will be described.

For the purpose of connection with the arm support **302**, one leg portion **315***a* of a hinge **315** is shown connected to the frame **310** as shown in FIGURE 22 with the remaining leg portion **315***b* of hinge **315** being secured to the frame **320**, of support **302** so as to effectuate a hinged connection between these components as shown in FIGURE 22.

Referring next to FIGURES 16, 17, 18 and 22 for a detailed description of the leg support **304**, it will be first noted that the same is somewhat V-shaped in plan and is designed to have either of its opposed ends **304***a* and **304***b* connected to the hip support **301**, with end

304*b* being connected in FIGURE 16, while end 304*a* is connected to hip support 301 in FIGURE 17 of the drawings.

In construction, the leg support 304 is reinforced throughout a substantial portion of its longitudinal extent by a U-shaped support channel 321 (FIGURE 23) that connects with end plates 322 and 323, with end plates 322 and 323 being identical but being disposed adjacent the leg support ends 304*a* and 304*b* respectively. Accordingly, and to facilitate mounting, each end plate 322 and 323 includes a pair of substantially T-shaped slots 324, 324, with the outline configuration of the slots 324, 324 being best shown in FIGURE 23 of the drawings, and with the slots 324, 324 being best shown in FIGURE 23 of the drawings. For the purpose of preventing longitudinal movement of the leg support 304 relatively of arms 314, 314, transversely extending U-shaped channels 325, 325 are preferably connected with regard to frame 321 at a point spaced inwardly from each end of the leg support 304, with the channels 325, 325 being intended to receive the head 326*a* of a bolt 326 that is carried by the projecting end of the arm 314, with this locked condition being best shown in FIGURES 23 and 24 of the drawings.

Accordingly, when it is desired to disengage the leg support 304, it is merely necessary to lift the same so that the head 326*a* becomes disengaged from the channel 325, at which time the same can be longitudinally removed with respect to the T-shaped support arms 314, 314 that pass freely through the slots 324, 324.

In the unilateral top 300, the preferred embodiment shown does not envision the use of an adjustable head support and, accordingly, the member 302, which has been described as the chest or upper side support, in reality includes a head supporting portion that is integral therewith. Accordingly, and for the purpose of providing such support the frame 320 is connected to a contour body support 327 that is shown contoured to receive either side of the head, shoulders and upper side portion of the patient, while leg support 304 and arm support 303 may be selectively positioned to support the arms and legs of the patient on either side.

To this end, the support member 302 further includes a support casting or plate 330 (FIGURES 18, 19 and 20), with this support plate being designed to pivotally support the arm support 303, as well as to provide support for the body portion 320 thereof. A wear plate 331 is also provided for the purpose of coacting with components of the pedestal base as will be described.

Referring next to FIGURES 20 and 21 for a detailed description of the manner in which the arm support 303 is connected with regard to the chest and head support 302, it will be first noted that the boss 330 is tapped to receive a bolt 335, with the bolt 335 being keyed or otherwise fixedly secured to a gear 336. An arm 340 has opposed ends 341 and 342 with end 342 being bored to be pivotally journaled around the shaft portion of bolt 335 as clearly shown in FIGURE 20 of the drawings. Additionally, the arm 340 has trunions 344 and 345 within which contoured control rods 346 and 347 may be slidably supported, with the end of rod 346 being formed to be engageable with the teeth of gear 336 as shown in FIGURE 21.

In this regard, the rods 346 and 347 are connected with respect to eccentric points on the control lever 348 through the medium of springs 350 and 351, respectively, with these springs tending to normally urge the control element and rods 346 and 347 to the position of FIGURE 21 where the end of the rod 346 is shown being in engagement with the teeth of the gear 336. In this fashion, when the control lever 348 is moved to the chain-dotted line position, the rod 346 will have its end portion retracted from meshing engagement with the gear 336, at which time the arm 340 will be free to rotate around its point of pivotal connection with respect to bolt or shaft 335. A similar type of connection is utilized between the end 341 and the support casting or plate 355 that is associated with the arm support 303. In this regard, a shaft or bolt 356 is connected to the support 355 and supports a fixed gear 357 that is designed to be engaged by the projecting end of the rod 347. Accordingly, and as before, when the control lever 348 is moved to the chain-dotted line position, the end of rod 347 will be disengaged from the gear 357, thus permitting rotation of the arm support 303 with respect to the end 341 of arm 340.

The practical result of the structure just described is to facilitate swinging of movement of the arm support between the positions of FIGURES 16 and 17 or any infinite number of positions intermediate thereto.

With reference to the structure of the arm support 303, the same includes a U-shaped body portion 360, with the lower wall portion 361 thereof being connected to the support casting or plate 355, while the upper wall portion 362 is spaced therefrom in parallelism as shown in the drawings.

The remaining components of the top 300 relate to the covering pads that are provided for patient comfort and from an examination of FIGURES 16 and 17, it will be noted that a pad 370 is provided for use on the leg support 304, while pad 371 is provided in covering relationship to the hip support 301, as well as the chest and head support 302. Pads 372 and 373 are provided on the body portions 361 and 362 respectively for the purpose of providing a cushioned surface for the supported arms of the patient.

The unilateral top shown in FIGURES 16 through 24 inclusive, further includes a deformable loop member 380 that serves to support an ether or patient screen with the member 380 being connected at its opposed ends to the support member 302. Similar provisions have been made in the tops 100 and 200 for use of such a flexible loop member which can be deformed by the surgon to the proper position for either screening the operative site from the patient's view or for providing a sterile zone in the appropriate location.

THE PEDESTAL BASE 11

The pedestal base 11 is designed to be interchangeably used with any one of the three operating tops previously described, and accordingly the same will be described in detail at this point to show the characteristics of the operating components thereof so as to preface the description of the overall operation of the improved operating table 10.

Accordingly, and referring to FIGURE 25, the pedestal base is generally T-shaped in plan for maximum access by the surgeon. The T-shaped base housing 20 generally supports wheels 21, 21 that make the table shiftable over a surface area with locking of the wheels against movement being effectuated by foot control lever 22, while raising or lowering of the pedestal base 11 is effectuated by foot controls 23 and 24, with member 23 preferably being employed to elevate the unit while lever 24 is a release for returning the unit to its normal height.

Projecting upwardly from the T-shaped housing 20 is a main support column 25 that is telescopically received within an upper tubular column 26 to which the adaptor base is connected, with the member 26 being shifted relatively of the support column 25 by the known use of hydraulic pressure applied through the medium of the foot lever 23.

The adaptor unit will be generally designated by the numeral 30 in connection with the ensuing description, and in this regard and referring to FIGURES 28 and 29, it will be noted that the adaptor 30, in fact, includes a fabricated housing or base portion 31 that is bored, as at 32, so as to be concentrically positioned over the projecting support shaft 33 that projects from the upper end

of the member 26, (FIGURE 29). In this fashion, the adaptor unit 30 can rotate relatively of the member 26 so as to, in effect, enable a full 360-degree turning action to be effectuated by any operating top with respect to the base 11.

Control of the just described rotation is effectuated by the use of a locking shaft 34 that is threaded into a tapped bore 35 so as to have its projecting end 35*a* engageable with a reduced portion of shaft 33 to thereby eliminate rotational movement between the base 31 and the shaft 33 with conventional ball bearings 36, 36 facilitating the movement just described.

Projecting upwardly from the base portion 31 are main support arms 38 and 39 that are arranged in yoke-like fashion so as to support that portion of the adaptor 30 that is shiftable with respect to base 31 as will be described. Accordingly, and referring again to FIGURES 28 and 29, it will be noted that the arms 38 and 39 serve to journal the opposed ends of a support shaft 40, with the support shaft 40, in turn, being journaled with the support arms 41, 42 and 43 that depend downwardly from the main support plate 44 that serves as the main point of connection with the individual tops 100, 200 and 300. In this regard and referring to FIGURE 29, the plate 44 further includes a wedge plate 45 that has tapered sides 45*a* and 45*b* that complementally engage the various tapered slides that have been previously described in connection with the individual tops 100, 200 and 300.

Retention of the individual top in place on plate 45, is effectuated by the use of a locking pin 46 that is provided with a projecting pin 46*a* (FIGURES 28 and 31) that rides in a spiral groove 47*a* of a cylindrical housing 47, with housing 47 being carried by plate 44 in depending relationship and with pin 46 being eccentrically journalled in housing 47 so as to effectuate a camming action during movement to extended position. As shown in the drawings, the projecting end of the locking pin 46 is movable from a position beneath the surface of the plate 44 as shown in full lines in FIGURES 28 and 31, or to the elevated position shown in chain-dotted lines in FIGURE 31 with such shifting occurring upon rotation of the locking pin 46 by handle 46*b*. In this regard, it is to be understood that each top has an appropriate aperture for receiving the extended end of the locking pin 46 so as to effectuate locking of the top against transverse movement with respect to the mounting plate 44, with the camming action of the pin 46 serving to urge the top in question tighter into tighter contact with plate 45.

For the purpose of effectuating changes in elevation of the mounting plate 30, the depending arms 41 and 42 are shown apertured at their lower ends to receive opposed pins 50, 50 that extend in opposed directions from a control block 51, with the control block 51 being threaded for engagement on a threaded shaft 52 and with the shaft 52 being rotatably supported by the base 31, as shown in FIGURE 28. The shaft 52 is connected by a universal coupling 53 to a turning shaft 54, with the turning shaft 54 being appropriately supported by a contoured extension 44*a* of the support plate 44 and with the shaft 54 further having its rotation controlled by an exposed control handle 55. As a result of the above structure, the support plate 44 which is pivotally supported on the support shaft 40 can be pivoted around this support shaft 40 upon rotation of the handle 55, with the pivoting movement, in fact, resulting from the shifting of the block 51 axially of the threaded shaft 52. Such movement controls the plane within which the support plate 44 lies so that Tredelenberg positioning can be achieved.

The extension 44*a* of support plate 44 further serves to support an auxiliary adjustment means generally indicated by the numeral 60, with the detailed construction of this control element 60 being best shown and described in FIGURES 28 and 30 of the drawings.

Accordingly, and referring to FIGURE 30 first, the appropriately contoured extension 44*a* includes a depending boss 61 that is bored and counter-bored as at 62 and 62 for the purpose of adjustably supporting an elongate shaft 64 that is intended to shift axially of the bore 62 as shown in FIGURE 30.

The shaft 64 is threaded as at 64*a* and is further provided with an elongate slot 64*b* with these components being provided for the purpose of shifting the shaft 64 axially of the bore 62 as will now be described. To this end, a bevel gear 66 is shown positioned in surrounding relationship to the shaft 64 with the bevel gear being internally threaded for engagement with the thread 64*a* of shaft 60, and with the bevel gear 66 being mounted on bearings 67 so as to be rotatably supported for meshing engagement with the bevel gear 68. The bevel gear 68 is mounted on a shaft 68*a* that is journalled with respect to the extension 44*a* by bearings 68*b*, 68*b* with the rotation to the shaft 68*a* being accomplished by handle 69. Rollers 70, 70 are provided on the bevel gear support member 71 that is secured to the upper end of the shaft 64 while the boss 61 further includes a pin (not shown) that rides in the elongate groove 64*b* of the shaft 64.

In this fashion, rotation of the handle 69 will cause a rotation of the bevel gears 68 and 66, with the rotation of the bevel gear 66 effectuating axially shifting of the shaft 64 due to the threaded engagement thereof with the thread 64*a*, with rotation of the shaft 64 being prevented by engagement of the pin (not shown) in slot 64*b*.

Accordingly, the rollers 70, 70 can in effect, be freely moved upwardly and downwardly by merely rotating the handle 69.

Thus, from the foregoing, it will be seen that the handle 55 serves to control angular inclination of the supporting plate 44 with respect to the base housing 20 while the handle 69 serves to pivot the back chest or upper support portions relatively of the hip, abdomen, and lower side supports.

In this fashion, the upper and lower torso supports of any top can be moved relatively of each other or can be moved as a unit relatively of base housing 20.

As an accessory, FIGURE 1 also illustrates certain leg support elements that can be used in cases of obstetrical surgery.

In essence, these identical supports 190, 190, each include a block 191 having one end of a curved arm 192 attached thereto as by welding, with the free end of arm supporting a strap 193 that can be adjusted to receive the patient's feet.

The blocks 191, 191 are each apertured as at 194, 194 so as to receive one or more attaching bolts 195, 195 that thread into tapped apertures 196, 196 provided on base 31 (see FIGURE 1) when the blocks 191, 191 are secured to opposite sides of the base 31 by bolts 196, 196 as described, the straps 193, 193 will accordingly receive the patient's feet in such a fashion as to elevate the legs in the spread apart required for such operation. In such instance, the leg supports 103, 103 are normally swung apart to their condition of maximum separation.

OPERATION OF THE DEVICE

While the overall operation of the device is believed somewhat apparent from the preceding detailed description, it is felt in order to undertake a short description with respect to the operation of the device in connection with each of the three operating tops above described.

Accordingly, the description of the operation will be undertaken with respect to the operation of the device when an individual top is positioned thereon.

A.—Operation during use of the supine top 100

The operation of the device with the supine top 100 in position will be best understood from an examination of FIGURES 1 through 8 of the drawings, and in this regard, it will first be assumed that the top 100 has been operatively positioned with respect to the pedestal base by inserting the wedge block or plate 45 between the di-

vergent guide blocks **130**, **130** followed by locking of the top **100** in place upon operation of the locking pin **45**.

At this time, the entire unit is secured with respect to the pedestal base through the aforementioned connection and in the normal instance of initial use, the locking member **138** will be in the chain-dotted line position of FIGURE 8. To remove the same, it is merely necessary to slightly pivot the back support **101** in the upward direction of FIGURE 8, whereupon the element **138** may be manually disengaged from the slot **132**. At this time, the flat surface **162** (FIGURE 5) of the support plate **136** will come in contact with the rollers **70**, **70** so that the articulated portions of the torso supports **301**, **302** are now firmly positioned with respect to the pedestal base **11**. With preliminary positioning so achieved, the handle **55** may be operated to move the mounting plate **44** into a substantially horizontal plane and the handle **69** may also be manipulated so as to bring the back support **101** into preliminary relationship with the hip support **102**. Additionally, the handle **143*b*** may be manipulated so as to approximately locate the head support **105** in proper position.

When this initial adjustment has been accomplished, the patient may be transferred to the supine top **100**, whereupon the leg supports **103**, **103** as well as the arm supports **104**, **104** may be preliminarily positioned so as to provide complete support for the patient. With the patient thus positioned, the surgeon may direct adjustment of the top **100** to the exact position required for the surgery involved. For example, the top **100** may first be positioned in either Tredelenberg or reverse Tredelenberg position if required by merely manipulating the handle **55**.

In the event of an abdominal operation, the handle **69** may be manipulated to lower the back support **101** and thus, in effect, stretch the stomach by virtue of the pivotal movement of the back support **101** with respect to the hip support **102**. In the event of an obstetrical or gynecology operation, the leg supports **103**, **103** may be moved around their pivot points (shaft **14**) so as to be in the divergent position shown in chain-dotted lines in FIGURE 4 of the drawings, with this adjustment being effectuated by mere lifting of the arm **120**, followed by rotation of the same and dropping of the same into locked engagement between the teeth members **115**, and **123**, as shown in FIGURE 3 of the drawings.

The arms of the patient may be similarly adjusted to any desired condition by manipulation of the arm member **151** relatively of either the back support **101** or the arm support **104**, with this adjustment of the arm **151** being facilitated by dis-engagement of the teeth elements **153** and **157** thereof, with either of the teeth elements **152** or **158** (see FIGURE 7). The ether screen **180** may then be deformed to the appropriate position, with it being noted that the ether screen is carried by appropriate apertures (not shown) that are provided preferably in the support plate **136**.

The entire table top can be then rotated around the axis of member **26** by a mere backing off of the locking member **34** as described in connection with FIGURE 29 so that the patient may be positioned to give the operating surgeon maximum accessibility to the operative site.

It will be seen that the aforementioned adjustment features permit the patient to be positioned on his back so that his limbs and torso may be supported in any one of an infinite number of operative positions.

Removal of the top **100** merely involves the rotation of locking pin **46** to retracted condition followed by sliding of the guides **130**, **130** out of interlocked condition with the wedge plate **45**.

B.—Operation during use of the prone top 200

The operation of the prone top **200** will be best understood from an examination of FIGURES 9 through 15 of the drawings, and in this regard, attention is again directed to the fact that the prone position has two different types of leg supports that are capable of interchangeable use with regard to the abdominal support member **202**.

Accordingly, and first assuming that the tapered ways **216**, **216** have been secured in locked relationship with regard to the wedge plate **45** of the pedestal base following by locking in place with shot pin **46**, and further assuming that the handle **55** and **69** have been operated to position the unit in the position of FIGURE 9, it is merely necessary that the patient be positioned on the top **200** in face down position, with the patient normally being initially positioned on the abdominal support **202** and the chest support **201**, followed by adjustment of the leg supports **205**, **205** to properly elevate the knees and accordingly relieve pressure that would otherwise be present on the abdomen. It further follows that the arm supports **203**, **203** may be adjusted as shown in FIGURE 7 to properly support the patient's arms and a similar adjustment may also be made of the head support **204** for the purpose of comfortably positioning the patient's head.

At this point, in the case of rectal operations, the patient's head can be lowered by use of handle **55** and the patient's legs can then be moved outwardly apart so as to effectuate maximum exposure of the posterior area in the region of the operative site.

In instances where the leg supports **206**, **206** are employed, it is merely necessary that these supports be inserted through the medium of having their pins **246**, **246** inserted in the openings of the support arms **218**, **218** with this condition of attachment being best shown in FIGURE 15 of the drawings.

Again and by manipulating either of the levers **55** or **69** and by further adjustment of the arm, leg and head supports, it will be seen that an infinite number of operative positions can be achieved with respect to a patient supported on the top in prone or face down position.

Removal of the top **200** merely involves the unlocking of shot pin **46** followed by the sliding movement described previously to release the top **200** with respect to wedge plate **45**.

It is contemplated that the head support **204** can be made integral with chest support **203** instead of being adjustable as described.

C.—Operation during use of the unilateral top 300

Referring now to FIGURES 16 through 24 for a description of the operation of the device with the unilateral top **300** in position, it will first again be assumed that the hip support **301** has been operatively locked in mechanical engagement with the wedge plate **45** and shot pin **46** so as to have the top **300** operatively associated with the pedestal base **11** as shown in FIGURE 16 of the drawings, with it being noted that the rollers **70**, **70** of the control unit **60** are in engagement with the wear plate **331** so as to have the upper chest and head support **302** positioned as shown in FIGURES 18 and 19 of the drawings.

In the event that the patient will be lying on his left side, the arm supports **303** and leg support **304** will be positioned as shown in FIGURE 16. Conversely, if the patient to be operated upon is to lie on his right side, the arm support **303** and the leg support **304** will be positioned as shown in FIGURE 17.

In this regard, positioning of the arm support **303**, **303** is facilitated by operation of the control lever **348** so as to permit rotational movement of the ends of the arm **340** with respect to support plates **330** and **356**, with this condition being shown and described in connection with FIGURES 20 and 21 of the drawings.

By like token, selective positioning of the leg supports **304**, **304** is achieved merely by passing the slots **324**, **324** of the appropriate end plate **322** or **323** over the projecting T-shaped support arms **314**, followed by engagement of the bolt head **326*a*** in cross channel **325**, as shown in FIGURE 22 of the drawings.

Again and with reference to the operation of the unilateral top **300**, the patient's body can be elevated or lowered at the head portion by use of handle **55**, while the chest or upper side area can be adjusted with respect to the hip or lower torso area merely by movement of the handle **69** which effectuates relative pivotal movement between the members **301** and **302**. Thus the torso support members **301** and **302** moved in unison by handle **55** or relatively of each othher by handle **69** as required.

It is, of course, to be understood that if desired, an adjustable head portion could be provided in lieu of the integral head support provided by the member **302**.

Accordingly, it will be noted that an infinite number of operative positions is again achieved during use of the unilateral top **300** attached to the pedestal base shown and described above.

Removal of top **300** again merely necessitates unlocking of shot pin **46** followed by disengagement of ways **312**, **312** from plate **45** by relative sliding movement therebetween.

CONCLUSION

It will be seen from the foregoing that there has been provided a new and novel type of operating table that is characterized by the use of a plurailty of individual body supports that are respectively anatomically contoured to provide a contoured form fitting type of support for a human body in prone, supine and unilateral positions, with these individual body supports being selectively utilized on a common pedestal base **11** that will serve to position each top in an infinite number of operative positions.

It will be seen how the use of a plurality of tops assures the operating surgeon of a surgical posture that is unexcelled in safety, comfort and approach and further how the use of the individualized, anatomically designed tops eliminates the need for engineering compromises that were inherent in the single top operating tables of the prior art.

Further it has been shown how this concept has the additional advantage of providing maximum comfort to the patient during the operation so as to minimize postoperative effects from the operation that would otherwise be present during the recouperation period following the operation.

It has also been shown how the use of the principle of flexing an articulated contoured torso support serves to provide maximum patient comfort during the operative period, with undue strains on the supported torso being obviated as a result of the contoured support thereof together with minimal flexure that results from use of the proper anatomically designed top.

Further, and with regard to the preferred material to be employed, it is preferred that the tops be made of electically conductive plastic reinforced with fiberglass and contoured to anatomically support the various portions of the body, with the fiberglass being bonded or otherwise secured to light-weight castings such as aluminum, so as to provide a top of great strength and light weight. In practice, it has been found that individual tops made as above described normally weigh less than 30 pounds per top, so that the same are readily capable of being handled by a nurse in preparing for the operation in question.

It does follow, however, that the individual supporting elements of the top could be formed of reinforced metal that were either covered or padded with foam or other soft material so as to provide a contour type of support for the patient that would be substantially the equivalent of the contoured support described in connection with the preferred embodimenut of the invention.

Similarly, while a pedestal base of the type shown and described above is preferably employed in normal instances, it follows that the contoured tops could be utilized with other types of supporting elements that were either adjustable or fixed, depending upon the conditions involved. For example, in connection with field use by the armed services, it is contemplated that a tripod type of base could be provided for attachment to the guide means of the individual tops above described. Simple ratchet and pawl types of arrangement could be employed in this regard to effectuate an adjustment that would be effective in the field although not possessed of the same ease of operation as is present in connection with the preferred embodiment of the invention.

While a full and complete description of the invention has been set forth in accordance with the dictates of the patent statutes, it is to be understood that the invention is not intended to be limited to the specific embodiment herein shown.

Thus, while the preferred embodiment of the invention utilizes three tops, each made of fiberglass and aluminum castings and each designed for a specific position, it is to be understood that a greater or lesser number of tops made of different material and contoured for different operating positions could be employed.

Accordingly, modifications of the invention, such as change of material and contour, may be resorted to without departing from the spirit hereof or the scope of the appended claims.

What is claimed is:

1. An operating table of the character described, comprising:

A. a base;

B. a support standard projecting from said base;

C. a mounting bracket carried by the projecting end of said standard;

D. an elongate support arm

(1) pivotally connected at one longitudinal end thereof to said mounting bracket;

E. auxiliary support means carried by the remaining longitudinal end of said support arm in projecting relationship therewith;

F. means for pivoting said elongate support arm around its point of pivotal connection with said mounting bracket;

G. a first torso support releasably secured to said pivoted end of said support arm;

H. a second torso support pivotally connected to said first torso support and being extensive therewith and overlying said auxiliary support means;

I. means for shifting said auxiliary support means relatively of said support arm whereby said second torso support can be pivoted relatively of said first torso support;

J. contoured leg support means releasably carried by said first torso support in opposed relationship to said second torso support;

K. contoured arm support means releasably carried by said second torso support;

L. and a head support carried by said second torso support in opposed relationship to said first torso support.

2. An operating table of the character described, comprising;

A. an operating top including

(1) a first torso support

(a) having upper and lower edge surfaces

(b) and being formed to provide contour type support for the lower torso portion of a patient;

(2) a second torso support

(a) having upper and lower edge surfaces and being formed to provide contour type support for the upper torso portion of said patient

(b) with said lower edge of said second torso support being hinged to the upper edge of said first torso support whereby said first and second torso supports are arranged in articulated extensive relationship to each other;

(3) a head support
(a) supported with respect to said upper edge of said second torso support
(b) and being extensive with respect to said first and second torso supports whereby the head of said patient may be independently supported;
(4) elongate arm supports
(a) shiftably supported with respect to at least one side edge of said second torso support adjacent said upper edge thereof
(b) with said arm supports being formed to provide independent contour type of support for the arms of said patient;
(5) elongated leg support means
(a) secured at one end thereof to said lower edge of said first torso support
(b) and being formed to provide independent contour type support for the legs of said patient;
(6) a connecting component
(a) carried by one of said torso supports;
B. a pedestal base including
(1) a floor engaging frame having an elevated support portion that is adapted to support said operating top in elevated condition above a floor surface;
(2) an adaptor unit having a base portion that is carried by said support portion
(3) a support plate pivotally carried by said adaptor unit
(4) a second connecting component carried by said support plate and adapted to releasably interlock with said first connecting component
(5) drive means adapted to pivot said support plate with respect to said adaptor unit
(6) an auxiliary support frame defined by said adaptor unit and projecting from said base portion in underlying relationship to said second torso support
(7) and a support arm carried by and projecting from said auxiliary frame with the projecting end thereof being in supporting engagement with said second torso support
(8) and second drive means moving said support arm relatively of said auxiliary frame whereby the angular relationship between said first and second torso supports may be varied upon operation of said second drive means while said first and second torso supports may be moved in unison relatively of said adaptor unit upon operation of said first drive means.

3. The device of claim 1 further characterized by the fact that said torso supports and said arm and leg support means are anatomically contoured to support a body in supine position.

4. The device of claim 3 further characterized by the following structure:
A. said leg support means including
(1) a pair of elongated support members
(2) each shiftably secured at one end to said first torso support
B. said arm support means including
(1) a pair of elongated support members
(2) each shiftably secured at one end to said second torso support.

5. The device of claim 4 further characterized by the fact that said head support is shiftably carried by said second torso support in opposed relationship to said first torso support.

6. The device of claim 4 further characterized by the presence of means that selectively lock said arm support means against shifting movement with respect to said second torso support.

7. The device of claim 4 further characterized by the presence of means that selectively lock said leg support means against shifting movement with respect to said first torso support.

8. The device of claim 4 further characterized by the fact that said arm support means include at least two elongate support components that are pivotally connected, whereby an articulated support is provided for the arm of the patient.

9. The device of claim 1 further characterized by the fact that said torso supports and said arm and leg support means are anatomically contoured to support a body in prone position.

10. The device of claim 9 further characterized by the following structure:
A. said leg support means being
(1) a pair of elongated support members
(2) releasably connected at one longitudinal end to said first torso support in opposed relationship to said said second torso support
B. said arm support means being
(1) a pair of elongated support members
(2) shiftably connected at one end to said second torso support.

11. The device of claim 10 further characterized by the fact that at least one said leg support member is of generally L-shaped configuration whereby a patient's body may be supported in kneeling position.

12. The device of claim 11 further characterized by the fact that positions of the leg portions of said L-shaped leg support member may be varied relatively of each other.

13. The device of claim 12 further characterized by the fact that said L-shaped leg support member is pivotally secured with respect to said first torso support.

14. The device of claim 10 further characterized by the fact that said arm suport means include at least two elongate support components that are pivotally connected, whereby an articulated support is provided for the arm of the patient.

15. The device of claim 1 further characterized by the fact that said torso supports and said arm and leg support means are anatomically contoured to support a body on either side thereof in unilateral position.

16. The device of claim 1 further characterized by the following structure:
A. said leg support means being
(1) an elongate support of sufficient width to accommodate both legs of a patient
(2) generally V-shaped in plan
(3) releasably connectable at either end to said first torso support in opposed relationship to said second torso support;
B. said arm support means being
(1) elongated arm supporting surfaces that are pivotally
(a) mounted with respect to a common elongate support that is pivotally connected to a central portion of said second torso support whereby said supporting surfaces may be positioned in projecting relationship to either side of said second torso supports.

17. The device of claim 16 further characterized by the fact that said elongated arm supporting surfaces may be selectively locked against rotation with respect to said second torso support.

18. The device of claim 16 further characterized by the fact that said overlying elongate arm supporting surfaces are connected by a wall member to define a U-shaped arm support.

19. The device of claim 16 further characterized by the fact that said elongate arm supporting surfaces are rotatable as a unit relatively of the remaining end of said common elongate support.

20. A pedestal base adapted for use with a patient support that has at least two torso supporting portions that

are hinged together for articulated movement of the character described, comprising;

A. a floor engaging frame having an elevated support portion that is adapted to support said patient support in elevated condition above a floor surface

B. an adaptor unit having a base portion that is carried by said support portion

C. a support plate pivotally carried by said adaptor unit

D. interlocking means carried by said support plate and adapted to releasably interlock with one said torso support

E. drive means adapted to pivot said support plate with respect to said adaptor unit

F. an auxiliary support frame defined by said adaptor unit and projecting from said base portion in underlying relationship to said second torso support

G. and a support arm carried by and projecting from said auxiliary frame with the projecting end thereof being in supporting engagement with said second torso support

H. and second drive means moving said support arm relatively of said auxiliary frame whereby the angular relationship between said first and second torso supports may be varied upon operation of said second drive means while said first and second torso supports may be moved in unison relatively of said adaptor unit upon operation of said first drive means.

21. The device of claim 20 further characterized by the presence of roller means provided on the projecting end of said support arm for engagement with said torso support.

22. The device of claim 20 further characterized by the fact that said adaptor unit is rotatable through a horizontal plane with respect to said elevated support portion.

23. The device of claim 20 further characterized by the fact that said interlocking means include

A. a wedge shaped plate carried by said support plate and having tapered sides that converge in plan

B. a locking element adapted to lock said first torso support in place on said wedge shaped plate.

24. An operating top of the character described for supporting the body of a patient with respect to a supporting base during operations, comprising;

A. a first torso support
  (1) having upper and lower edge surfaces
  (2) and being formed to provide contour type support for the lower torso portion of said patient

B. a second torso support
  (1) having upper and lower edge surfaces
  (2) and being formed to provide contour type support for the upper torso portion of said patient
  (3) with said lower edge of said second torso support being hinged to the upper edge of said first torso support whereby said first and second torso supports are arranged in articulated extensive relationship to each other;

C. a head support
  (1) supported with respect to said upper edge of said second torso support
  (2) and being extensive with respect to said first and second torso supports whereby the head of said patient may be independently supported

D. arm support means
  (1) shiftably supported with respect to at least one side edge of said second torso support adjacent said upper edge thereof
  (2) with said arm support means being formed to provide independent contour type of support for the arms of said patient

E. leg support means
  (1) secured at one end thereof to said lower edge of said first torso support
  (2) and beng formed to provide independent contour type support for the legs of said patient

F. and connecting means
  (1) carried by one of said torso supports
  (2) and adapted to operatively interconnect said top with respect to said supporting base.

25. The device of claim 24 further characterized by the fact that said torso supports and said and leg support means are anatomically contoured to support a body in supine position.

26. The device of claim 25 further characterized by the fact that

A. said leg support means being
  (1) a pair of elongate support members
  (2) each shiftably secured at one end to said first torso support.

27. The device of claim 25 further characterized by the fact that

A. said arm support means being
  (1) a pair of elongated support members
  (2) each shiftably secured at one end to sad second torso support.

28. The device of claim 27 further characterized by the fact that each said support member includes an elongate support arm pivotally connected at its opposed ends to (first) said second torso support and (second) an elongate arm supporting surface.

29. The device of claim 24 further characterized by the fact that said torso supports and said arm and leg support means are anatomically contoured to support a body in prone position.

30. The device of claim 29 further characterized by the fact that

A. said leg support means are
  (1) a pair of elongated leg support members
  (2) releasably connected at one longitudinal end to said first torso support.

31. The device of claim 30 further characterized by the fact that at least one leg support member projects extensively from said first torso support in opposed relationship to said second torso support.

32. The device of claim 29 further characterized by the fact that

A. said leg support means include at least one
  (1) elongate support arm that is releasably secured at one end to said first torso support in depending relationship therewith
  (2) an elongate support surface carried by said support arm in generally right angle relationship therewith whereby a patient may be supported on said prone top in kneeling position.

33. The device of claim 29 further characterized by the fact that

A. said arm support means being
  (1) a pair of elongated support members
  (2) each shiftably secured at one end to said second torso support.

34. The device of claim 33 further characterized by the fact that each said support member includes an elongate support arm pivotally connected at its opposed ends to (first) said second torso support and (second) an elongate arm supporting surface.

35. The device of claim 24 further characterized by the fact that said torso supports and sad arm and leg support means are anatomically contoured to support a body on either side in unilateral position.

36. The device of claim 35 further characterized by the fact that

A. said leg support means are
  (1) an elongate support of sufficient width to accommodate both legs of a patient
  (2) generally V-shaped in plan
  (3) releasably connectable at either end to said first torso support in opposed relationship to said second torso support

37. The device of claim 35 further characterized by the fact that

A. said arm suport means being

(1) pivotally mounted with respect to a common elongate support that is pivotally connected to a central portion of said second torso support whereby supporting surfaces may be positioned in projecting relationship to either side of said second torso support.

38. An operating table of the character described, comprising

A. an operating top for supporting a patient and including

(1) a first torso support

(a) having upper and lower edge surfaces

(b) and being formed to provide contour type support for the lower torso portion of said patient

(2) a second torso support

(a) having upper and lower edge surfaces

(b) and being formed to provide contour type support for the upper torso portion of said patient

(c) with said lower edge of said second torso support being hinged to the upper edge of said first torso support whereby said first and second torso supports are arranged in articulated extensive relationship to each other;

(3) a head support

(a) supported with respect to said upper edge of said second torso support

(b) and being extensive with respect to said first and second torso supports whereby the head of said patient may be independently supported

(4) arm support means

(a) shiftably supported with respect to at least one side edge of said second torso support adjacent said upper edge thereof

(b) with said arm support means being formed to provide independent contour type of support for the arms of said patient.

(5) leg support means

(a) secured at one end thereof to said lower edge of said first torso support

(b) and being formed to provide independent contour type support for the legs of said patient

(6) and connecting means carried by said first torso support

B. and a pedestal base including

(1) a floor engaging frame having an elevated support portion that is adapted to support said patient support in elevated condition above a floor surface

(2) an adaptor unit having a base portion that is carried by said support portion

(3) a support plate pivotally carried by said adaptor unit

(4) interlocking means carried by said support plate and adapted to releasably interlock with said connecting means of said first torso support

(5) drive means adapted to pivot said support plate with respect to said adaptor unit

(6) an auxiliary support frame defined by said adaptor unit and projecting from said base portion in underlying relationship to said second support

(7) and a support arm carried by and projecting from said auxiliary frame with the projecting end thereof being in supporting engagement with said second torso support

(8) and second drive means moving said support arm relatively of said auxiliary frame whereby the angular relationship between said first and second torso supports may be varied upon operation of said second drive means while said first and second torso supports may be moved in unison relatively of said adapter unit upon operation of said first drive means.

References Cited by the Examiner

UNITED STATES PATENTS

2,090,679	8/1937	Jones	108—157
2,647,026	7/1953	Shampaine	269—325
2,854,303	9/1958	McInnis	248—161
3,014,682	12/1961	Veneman	248—161
3,049,388	8/1962	Browne	108—157

FOREIGN PATENTS

657,933	1/1929	France.

ROBERT C. RIORDON, *Primary Examiner.*