A. F. ROBERTSON AND G. J. MOE.

GOLF CLUB RACK.

APPLICATION FILED MAY 17, 1921.

1,404,893. Patented Jan. 31, 1922.

2 SHEETS—SHEET 1.

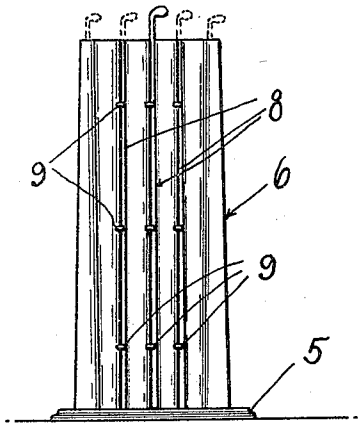

FIG. 1.

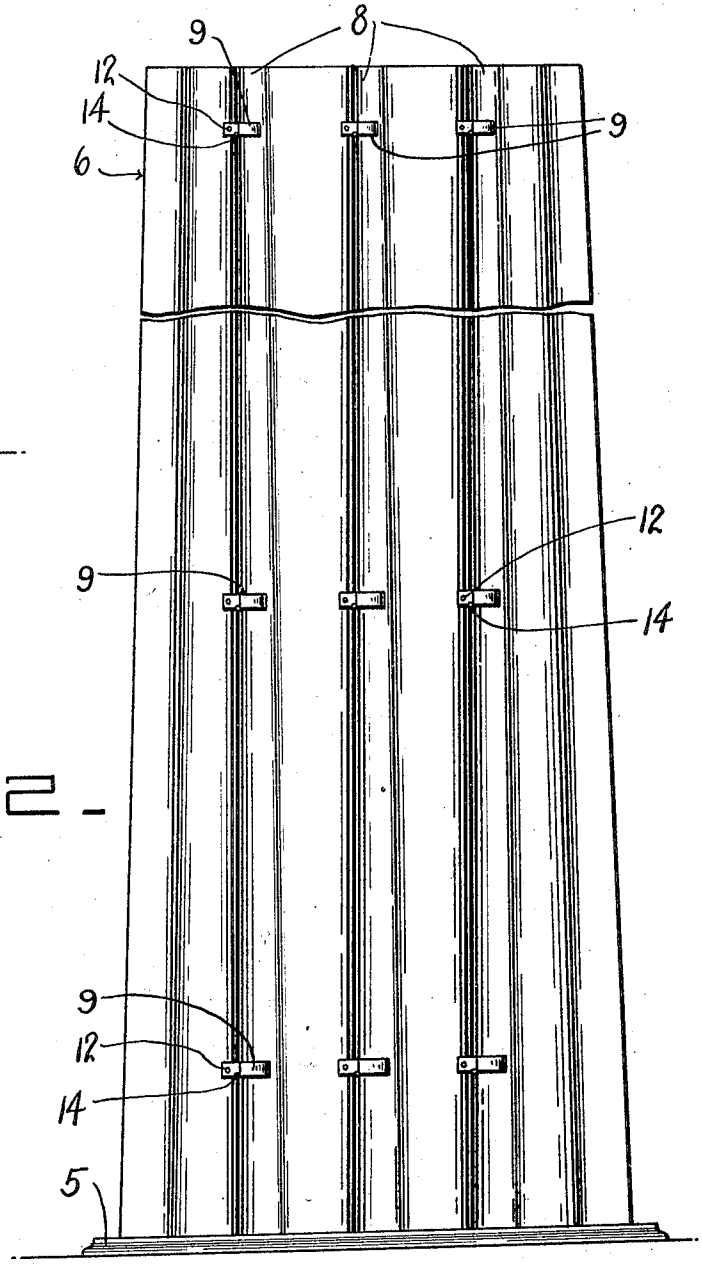

FIG. 2.

FIG. 6.

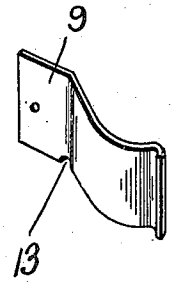

Inventors

Andrew F. Robertson &
George J. Moe

By L. B. James

Attorney

A. F. ROBERTSON AND G. J. MOE.

GOLF CLUB RACK.

APPLICATION FILED MAY 17, 1921.

1,404,893.

Patented Jan. 31, 1922.

2 SHEETS—SHEET 2.

FIG. 3.

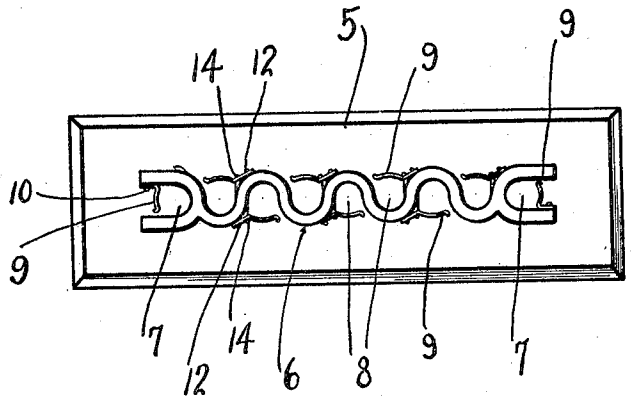

FIG. 4.

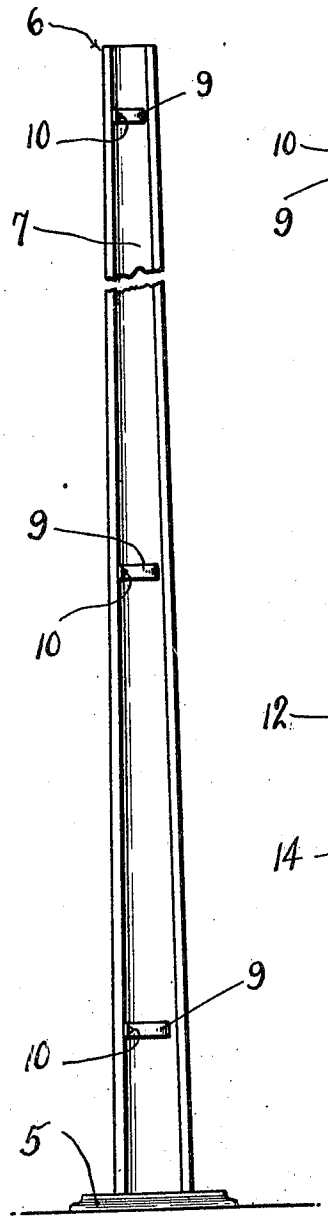

FIG. 5.

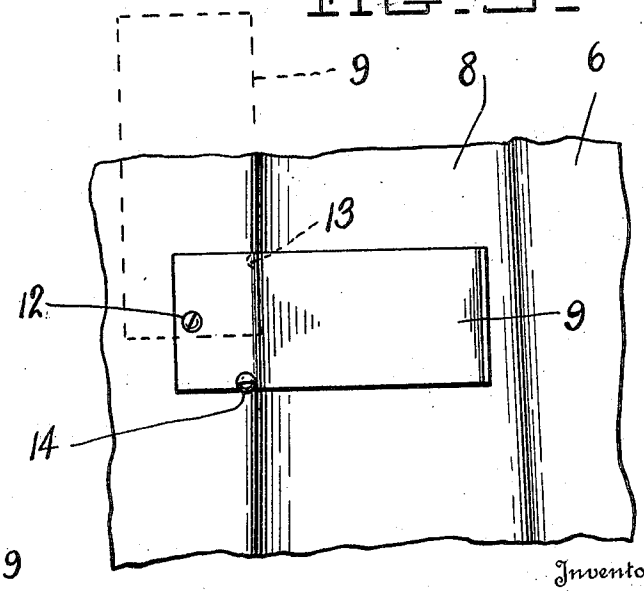

Inventors

Andrew F. Robertson &
George J. Moe

By L. B. James

Attorney

UNITED STATES PATENT OFFICE.

ANDREW F. ROBERTSON AND GEORGE J. MOE, OF ANN ARBOR, MICHIGAN.

GOLF-CLUB RACK.

1,404,893. Specification of Letters Patent. Patented Jan. 31, 1922.

Application filed May 17, 1921. Serial No. 470,253.

To all whom it may concern:

Be it known that we, ANDREW F. ROBERTSON and GEORGE J. MOE, citizens of Great Britain and the United States, respectively, residing at Ann Arbor, in the county of Washtenaw and State of Michigan, have invented certain new and useful Improvements in Golf-Club Racks, of which the following is a specification.

This invention relates to racks and more particularly to golf club racks.

The primary object of this invention resides in the provision of a rack for golf clubs whereby the handles of the clubs will be maintained in their initial straight condition when not in use.

Another object of this invention resides in the provision of a rack adapted to support a plurality of golf clubs in such position that their initial straight condition will be maintained without sacrificing the convenience of their easy removal from the rack.

A still further object of this invention resides in the provision of a rack for golf clubs which will occupy the minimum area of space and support the maximum number of clubs in a straight condition.

A still further object of this invention resides in the provision of a golf club rack which consists of an assemblage of elements so constructed and arranged that the cost of manufacture is reduced to a minimum.

With these and other objects in view, this invention resides in certain novel features of construction and arrangement of elements to be hereinafter more particularly set forth in the specification, illustrated in the accompanying drawings and pointed out in the appended claims.

In the accompanying drawings;

Fig. 1 is a side view of the rack showing a golf club in position therewith.

Fig. 2 is a similar view of the rack per se.

Fig. 3 is a plan view thereof.

Fig. 4 is an end view thereof.

Fig. 5 is a view of a portion of the rack illustrating one of the resilient clips secured thereto.

Fig. 6 is a detail perspective view of one of the resilient clips.

In the present embodiment of this invention, the numeral 5 designates a base projecting from which is a web 6 having its ends and sides formed to provide channels 7 and 8, the latter of which have their centres disposed on the plane that passes through the centres of the end channels.

The aforesaid web together with the walls of the channels, formed therein, extend from the base, thus producing a structure adapted to readily receive the handles of the golf clubs when placed therein in an inverted position.

In order to retain the golf clubs within the channels, a plurality of resilient clips 9 are suitably secured to one wall of each channel and are so disposed as to project a sufficient distance from their securing means to contact with the golf club handles and cause them to lie closely against the smooth walls of the channels. These resilient clips are either rigidly secured as at 10 to the walls of the channels or pivotally secured as at 12 and provided with notches 13 adapted to engage headed studs 14 adjacent their pivots for supporting their projecting portions and retaining them in contact with the golf club handles.

With this invention fully set forth, it is manifest that a golf club rack is produced which is cheap to manufacture, compact and readily adapted to conveniently hold a plurality of golf clubs in their initial straight condition when not in use and while this disclosure sets forth our present conception of the invention, we do not wish to be confined to the exact structure and accordingly reserve the right to resort to such changes as come within the scope of the claims.

Having thus described our invention, what we desire to protect by Letters Patent is:—

1. A rack having a web with spaced channels at one of its sides and spaced channels at its opposite side, the last-named channels alternating with the first-named channels, and all of the said channels being arranged with their centers in a plane that extends through the several channels, and means associated with the web to retain sticks in the channels at opposite sides of the web.

2. A rack having a web with spaced channels at one of its sides and spaced channels at its opposite side, the last-named channels alternating with the first-named channels,

and all of the said channels being arranged with their centers in a plane that extends through the several channels, and with channels at its edges and arranged in the same plane as said alternate channels, means associated with the web to retain sticks in said alternate channels, and means associated with the web to retain sticks in said edge channels.

In testimony whereof we affix our signatures.

ANDREW F. ROBERTSON.
GEORGE J. MOE.