(No Model.)

J. KORMIL.

CAR COUPLING.

No. 456,039. Patented July 14, 1891.

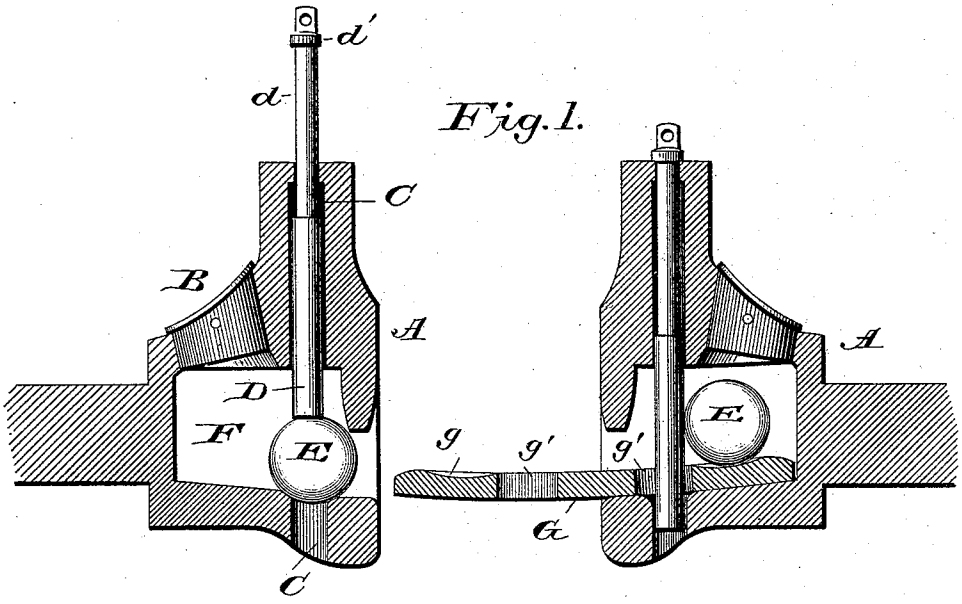

Fig. 1.

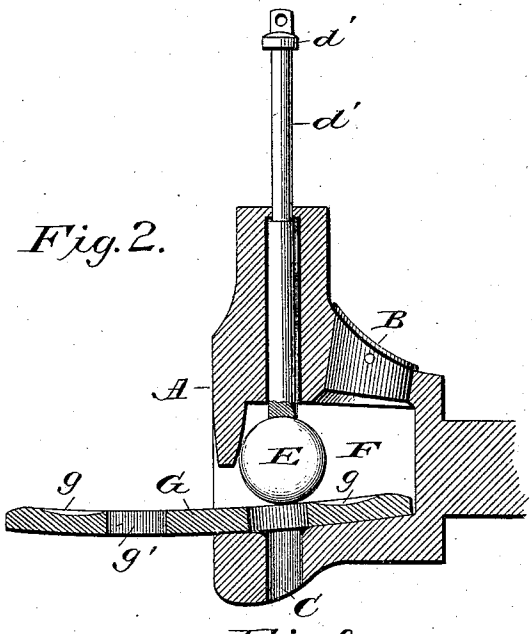

Fig. 2.

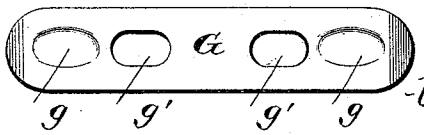

Fig. 3.

Witnesses
L. S. Leavitt.
C. N. Johnson

Joseph Kormil.
Inventor
by C. N. Johnson
Attorney

THE NORRIS PETERS CO., PHOTO-LITHO., WASHINGTON, D. C.

UNITED STATES PATENT OFFICE.

JOSEPH KORMIL, OF GOLDENDALE, WASHINGTON.

CAR-COUPLING.

SPECIFICATION forming part of Letters Patent No. 456,039, dated July 14, 1891.

Application filed February 26, 1891. Serial No. 382,985. (No model.)

To all whom it may concern:

Be it known that I, JOSEPH KORMIL, a citizen of the United States of America, residing at Goldendale, in the county of Klikitat and State of Washington, have invented certain new and useful Improvements in Car-Couplings; and I do hereby declare the following to be a full, clear, and exact description of the invention, such as will enable others skilled in the art to which it appertains to make and use the same, reference being had to the accompanying drawings, and to letters of reference marked thereon, which form a part of this specification.

This invention relates to improvements in car-couplings.

The object of the invention is to provide an automatic car-coupling of the link-and-pin type with means for holding the coupling-pin elevated, so that when the link enters the draw-head the supporting means will be removed from beneath the pin to permit it to fall, the construction of the parts being such that the means employed for holding the pin elevated will also act as a gravity-support to hold the link in a horizontal position and the device so constructed that the pin can be held elevated by the supporting means whether a link is in the draw-head or not; and the invention consists in the construction and combination of the parts, as will be hereinafter fully set forth, and particularly pointed out in the claim.

In the accompanying drawings, forming part of this specification, Figure 1 is a sectional view showing a link secured in place in one of the draw-heads and a pin supported for coupling in the other draw-head. Fig. 2 is a sectional view showing the coupling-pin elevated and the link maintained in a horizontal position for uncoupling. Fig. 3 is a plan view of a link such as I employ with my improved coupling.

Prior to my invention it has been proposed to provide an automatic coupling of the link-and-pin variety with a ball for maintaining the coupling-pin in an elevated position, as will be seen by reference to patents issued to Greenleaf and Adams, dated November 7, 1876, and to G. F. Almy, dated September 28, 1886.

Referring to the drawings, A is the draw-head, which is preferably made up of two parts securely bolted to each other, these parts being provided with semicircular apertures, in which a cap or cover B is placed and held by a suitable pin. Pin-openings C are provided in the upper and lower walls of the draw-head, in which the coupling-pin D plays, the lower end of said pin being slightly concave, so as to better fit upon the ball E contained within the draw-head. The coupling-pin has an upper reduced portion *d*, and to the upper end thereof is secured a cap or nut *d'*, which will prevent said pin falling out of the opening C when lowered.

The draw-head is provided with a central chamber F, which is extended above the mouth of the draw-head and rearwardly, as shown, the bottom of said chamber being inclined. This chamber is of sufficient size to receive one end of the coupling-link G and permit the ball E to rest thereon, the pin resting upon the ball. In other words, this chamber has a vertical depth equal to the diameter of the ball and thickness of the link, and by providing the same the link can be maintained in a horizontal position, as shown in Fig. 2, and the car uncoupled while the link still remains in the draw-head.

When the cars are coupled, the ball will rest upon the end of the link G, lying in the concave portion *g* formed therein, said concave portion being rear of the opening *g'* in the link.

In operation, when it is desired to couple cars, it can be accomplished by simply elevating the coupling-pin D. The ball will then automatically roll under said pin to permit the pin to rest upon the upper surface thereof. When the link is inserted in the mouth of the draw-head, the ball will be knocked from under the pin and the cars automatically coupled.

This method of automatically coupling the cars has been carried out by several styles of couplers that have come to my notice; but I am not aware that the parts have been so constructed that after the link has been passed into the draw-head the ball will rest upon the extended end of the link so as to maintain said link in a horizontal position, nor has the aperture in the draw-head been of such a size that the ball can rest upon the link and under the coupling-pin, so that by simply drawing upon the link the cars can be detached.

This feature of my invention renders this style of draw-heads practical, as a coupling that does not provide such means is considered by railroad men to be objectionable and has not therefore come extensively into use.

Having thus described my invention, what I claim as new, and desire to secure by Letters Patent, is—

In combination with a car-coupler constructed substantially as shown, having a chamber of sufficient size to receive the link and automatic pin-support, the chamber having a flat inclined floor, together with a link having end portions which extend beyond the apertures therein, and concave portions upon which the ball or pin support will rest when the pin is in engagement with the openings in the link, substantially as set forth.

In testimony whereof I affix my signature in presence of two witnesses.

JOSEPH KORMIL.

Witnesses:
N. B. BROOKS,
R. E. JACKSON.