Feb. 25, 1958 M. F. SMITH 2,824,819

METHOD FOR OXIDE INSULATING ALUMINUM CONDUCTORS

Filed May 11, 1956

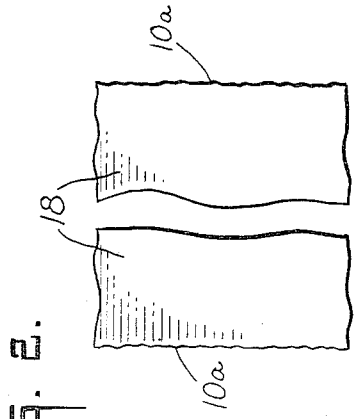

Fig. 2.

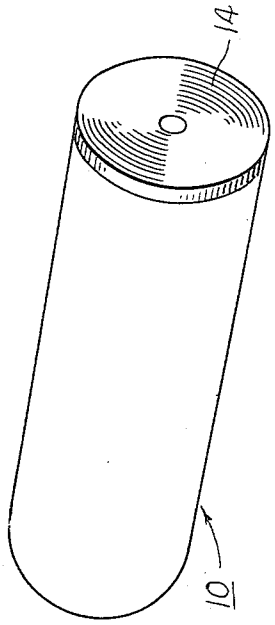

Fig. 1.

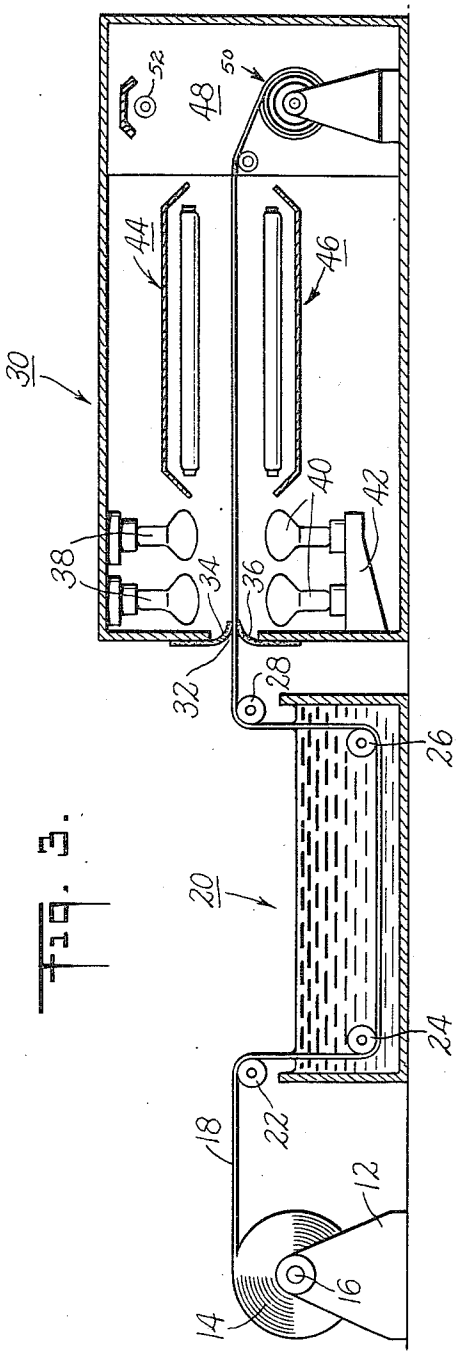

Fig. 3.

INVENTOR
Millard F. Smith
BY
John C. Blair
ATTORNEY

United States Patent Office 2,824,819
Patented Feb. 25, 1958

2,824,819

METHOD FOR OXIDE INSULATING ALUMINUM CONDUCTORS

Millard F. Smith, Westport, Conn.

Application May 11, 1956, Serial No. 584,325

6 Claims. (Cl. 148—6.3)

This invention relates to a method and apparatus for insulating metal strip. More particularly, the invention relates to a method and apparatus for insulating metal foil, such as aluminum, by oxidizing the surfaces thereof.

Small electrical coils, such as inductance coils, may be wound from metal strip, one material which has been used therefor with some success being aluminum foil. Such foil in strip form is ideally suited for the making of small coils where space is at a premium, but in the past difficulty has been experienced in properly insulating the surface thereof. Heretofore attempts have been made to insulate aluminum foil strip by the use of various varnish coatings but these were found difficult to apply and control in thickness. The resulting coatings were usually found to be too thick resulting in fractures and imperfect insulation as well as excessive use of space. Also, the edges of this aluminum foil strip are slightly irregular or ragged and it was found difficult to cover these completely with the varnish, making for imperfect insulation. Aluminum oxide is known as a good electrical insulator and thus attempts were made to insulate aluminum foil strip by oxidizing the surface. However, in the past attempts to do so met with difficulty because the oxide was often too thin and hence easily rubbed off or too thick, resulting in coating fractures. When aluminum foil is exposed to normal atmosphere, an uneven film of aluminum oxide forms containing many impurities resulting from the action of various gases on the strip. The insulating properties of the film suffer from the presence of such unevenness and impurities which also inhibit further oxidation to form effective insulation. Consequently, if any of such oxide was on the surface of the aluminum before the oxidation process an imperfect insulating coating was bound to be the result.

Accordingly, one of the objects of this invention is to provide a method of insulating foil strip, such as aluminum, resulting in an insulating coating free from defect and capable of forming electrical coils. Another object of this invention is to provide a method of the above character in which a continuously moving aluminum strip is oxidized with an insulating coating of substantial uniform thickness. Another object of this invention is to provide a method of the above character wherein a foil strip may be continuously and cheaply oxidized for purposes of insulation. Another object of this invention is to provide a method of the above character in which the thickness of the oxide coating may be automatically and uniformly controlled. Another object of this invention is to provide a method of the above character which will result in a durable coating well able to withstand the winding operation. Another object of this invention is to provide an apparatus in which foil strips such as aluminum may be continuously and cheaply oxidized with a durable coating of controlled thickness. Other objects will be in part obvious and in part pointed out hereinafter.

The invention accordingly comprises the several steps and the relation of one or more of such steps with respect

to each of the others, and the apparatus embodying features of construction, combinations of elements and arrangements of parts which are adapted to effect such steps, all as exemplified in the following detailed disclosure and the scope of the invention will be indicated in the claims.

Referring now to the drawings in which is shown one of the various possible embodiments of this invention,

Figure 1 is a perspective view of a roll of aluminum foil of the type to be oxidized by the method and apparatus described herein.

Figure 2 is a fragmentary plan view on a greatly enlarged scale of a portion of the metal strip to be treated according to the method described herein, and

Figure 3 is a diagrammatic sectional view of the apparatus which may be used in the practice of my method.

Similar reference characters refer to similar parts throughout the several views of the drawings.

Generally speaking, my process utilizes aluminum foil strip which is usually received from the fabricator in large rolls such as illustrated in Figure 1. From such rolls small continuous strips of foil may be cut in any convenient manner and continuously run through the apparatus shown in Figure 3 to oxidize the surface thereof. This is done prior to entering winding apparatus of conventional design for automatically winding electrical inductance coils or the like. Thus, the strip from the roll is passed through a chemical bath where all foreign matter, such as grease and oxides, is removed from the surface thereof. After this it passes to a chamber for thorough drying and then is exposed to an ozone-containing atmosphere, preferably produced by ultraviolet radiation, to form very quickly a continuous aluminum oxide coating over the entire surface and edges of the strip thereby providing an excellent electrical insulating cover for the strip. The strip then passes to the winding equipment for formation into the desired coils.

More specifically the aluminum strip to be treated is cut from a roll generally indicated at **10** in Figure 1, and this may be achieved in any desired manner. For example, the roll may be vertically sliced to desired thickness and each resultant small roll processed in the manner to be described. On the other hand the entire roll may be mounted in the apparatus for processing and suitable mechanism provided for continuously cutting a small strip of the desired width from the large roll to be fed through the processing apparatus.

In practice it has been found that even when the strip of foil is cut with great care the resultant edges of the strip are somewhat irregular or ragged as indicated at **10***a* in Figure 2. Because of such irregularities it has been found in practice that it is difficult to completely cover such strip with an insulating coating. The irregularities tend to protrude through varnish coatings and certain other types of chemical coatings used in the past. My improved method described herein assures a continuous coating throughout the strip.

Referring now to Figure 3 a standard **12** supports a roll **14** of aluminum foil strip on a shaft **16**. Suitable equipment (not shown) may be employed for rotating the roll at a desired rate of speed to feed the strip **18** therefrom to a tank, generally indicated at **20**. As previously mentioned, roll **14** may be of considerable length and thus associated with suitable cutting equipment for cutting a narrow continuous length of strip **18** therefrom. On the other hand, roll **14** may comprise a narrow strip of the dimensions used in forming these miniature electrical coils.

Strip **18** is fed forwardly or to the right as viewed in Figure 3 over roller **22**, under rollers **24** and **26**, and over roller **28**. Rollers **22**, **24**, **26** and **28** may be driven as desired at a proper speed for continuously feeding strip

18 through a chemical bath in tank 20. This chemical bath may be of any desired composition suitable for removing foreign matter such as grease, oxides and impurities from the strip without attacking the metallic foil; one of the amines may be used for this purpose.

Strip 18 passes from roller 28 through the processing chamber generally indicated at 30. Generally speaking, chamber 30 includes apparatus for first thoroughly drying the strip, and then subjecting it to ultra-violet radiation to form an oxide coating thereon.

The strip enters the chamber 30 through an opening 32 having felt flaps, or the like, 34 and 36, extending thereover and suitably disposed to wipe both surfaces of the strip 18 as it moves into the chamber. The strip then passes between infra-red lamps 38 extending from the top of the chamber and suitably secured thereto and lamps 40 supported therebeneath on a shelf or the like 42. Preferably the atmosphere at this point in the interior of the chamber 30 is kept substantially free from water and impurities which prevent the formation of an effective insulating film.

Preferably the strip next passes between ultra-violet lamps or other ozone producing apparatus generally indicated at 44 and 46 and its surfaces are thereby oxidized. The presence of the ozone in this portion of the chamber has been found to accelerate the oxidation process. Further, it has been found in practice that ultra-violet radiation forms an oxide coating over the entire surface of strip 18 including the ragged edges thereof. Further still, this oxide coating is of substantially uniform thickness and substantially free from impurities, thereby providing in an economical fashion a durable and practical electrical insulating covering for the strip.

The strip then enters a compartment 48 containing conventional winding equipment illustratively indicated at 50 for automatically forming electrical inductance coils or the like. It has been found in practice that there may be some cracking of the oxide coacting due to the bending of the strip during winding. Accordingly I have found it preferable to include in compartment 48 ultra-violet lamps 52 for directing ultra-violet radiation against the strip as it is being wound into coil. Thus, if there is any such breakage, a new oxide coating is formed on the strip while it is being wound to maintain the desired electrical insulation. The ozone produced by the ultra-violet lamps forms such new coating very rapidly, so that the breakage is repaired before the cracked portion is covered by another portion of the coil.

Accordingly, it can be seen that I have provided a simple and economical method of providing a reliable insulating coating on an aluminum foil strip or the like in a continuous fashion so that it may be utilized in the

winding of electrical coils. The continuous formation of an insulating oxide coating of substantially uniform thickness makes for a very cheap way of making small electrical coils.

It will thus be seen that the objects set forth above, among those made apparent from the preceding description, are efficiently attained and, since certain changes may be made in carrying out the above method and in the construction set forth without departing from the scope of the invention, it is intended that all matter contained in the above description or shown in the accompanying drawings shall be interpreted as illustrative and not in a limiting sense.

I claim:

1. In a method of coiling oxide insulated aluminum conductor, the step of winding said conductor into a coil in an atmosphere containing nascent oxygen to reinsulate the areas of said strip where cracking of the original oxide insulation has occurred.

2. The combination defined in claim 1 in which said winding step is accomplished in an ozone-containing atmosphere.

3. The combination defined in claim 1 in which said winding step is accomplished in the presence of ultra-violet radiation.

4. In a method of winding an aluminum conductor into a coil having insulated turns, the steps of removing essentially all foreign matter from the surfaces of said conductor, drying said conductor, oxidizing said conductor to insulate the surface thereof, and winding said conductor into a coil in the presence of nascent oxygen.

5. The combination defined in claim 4 in which said winding step is accomplished in an ozone-containing atmosphere.

6. The combination defined in claim 4 in which said winding step is accomplished in the presence of ultra-violet radiation.

References Cited in the file of this patent

UNITED STATES PATENTS

1,628,456	Foulke	May 10, 1927
1,741,319	Lazarus	Dec. 31, 1929
2,166,139	Guthrie et al.	July 18, 1939
2,188,940	Diggory et al.	Feb. 6, 1940
2,276,647	Conrad et al.	Mar. 17, 1942
2,768,916	Seabold et al.	Oct. 30, 1956

OTHER REFERENCES

Roscoe and Schrolemmer: "Treatise on Chemistry," vol. I, pages 262–272, pages 272 relied on. Fourth ed. pub. 1911. Filed November 13, 1951.