Feb. 16, 1943. W. K. SMITH 2,311,483

PRESSURE KNEE BRACE

Filed May 12, 1941 2 Sheets-Sheet 1

Fig. 1.

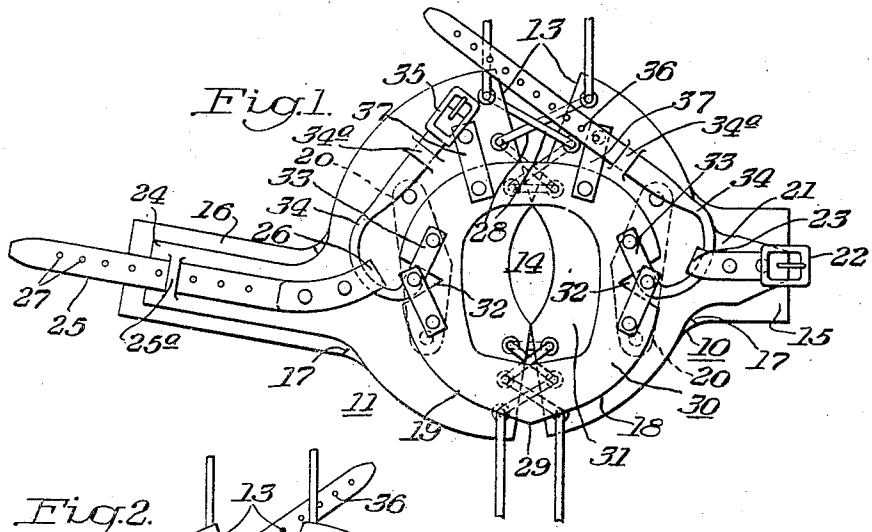

Fig. 2.

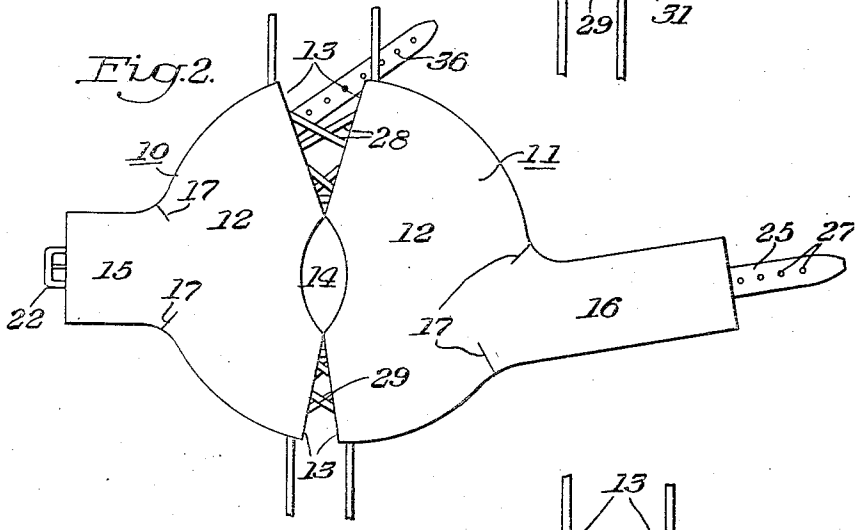

Fig. 3.

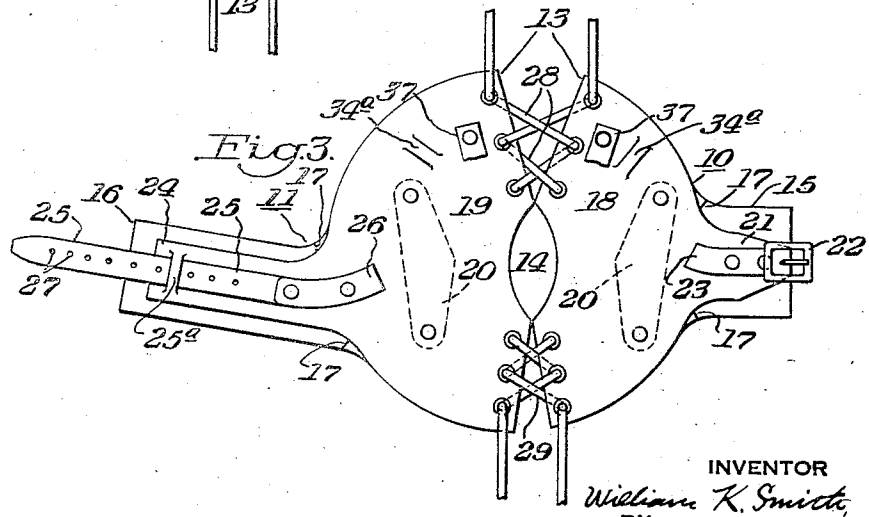

INVENTOR
William K. Smith
BY
Edward A. Lawrence
ATTORNEY

Feb. 16, 1943. W. K. SMITH 2,311,483

PRESSURE KNEE BRACE

Filed May 12, 1941 2 Sheets-Sheet 2

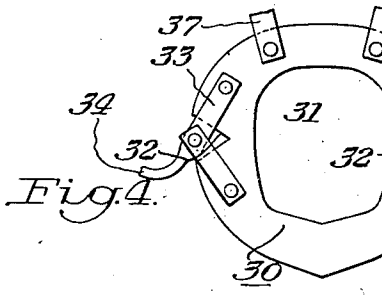

Fig.4.

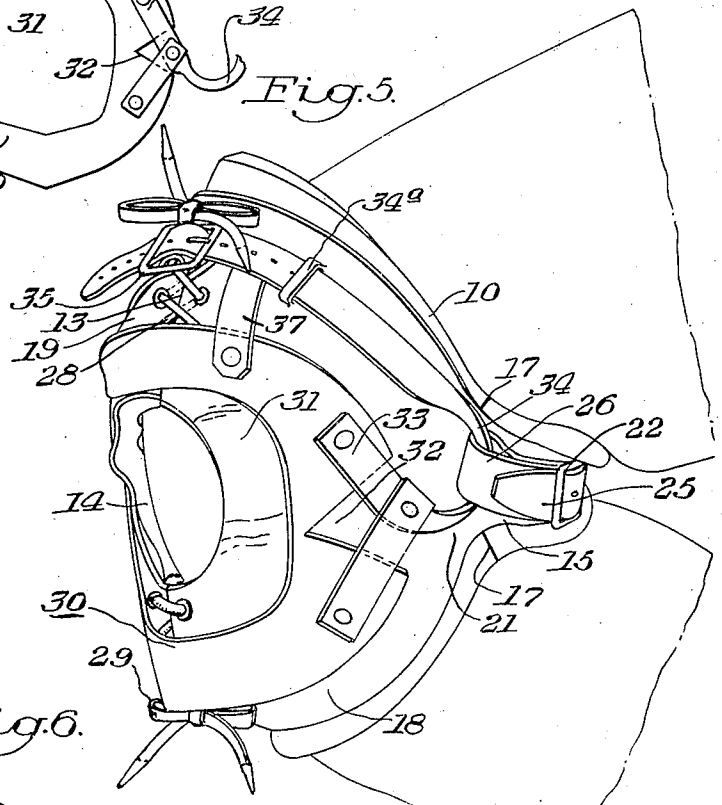

Fig.5.

Fig.6.

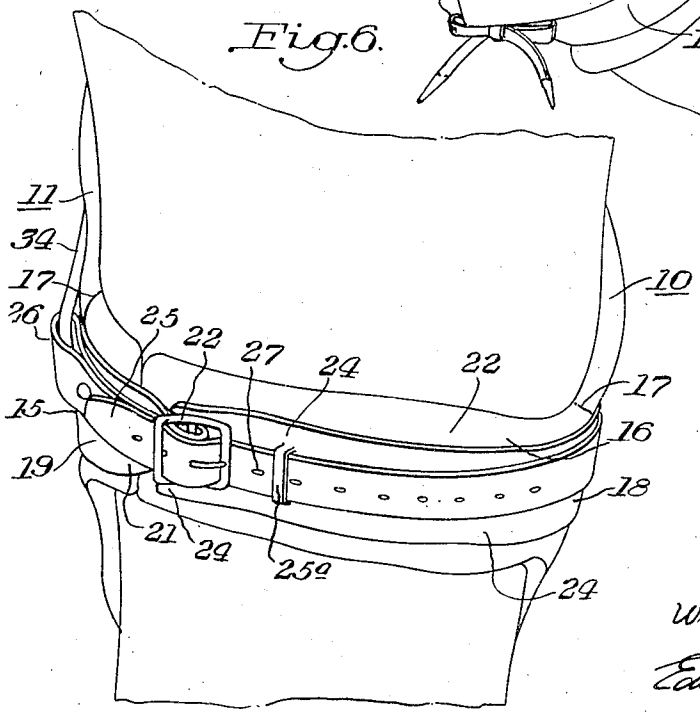

INVENTOR
William K. Smith.
BY
Edward A. Lawrence
ATTORNEY

Patented Feb. 16, 1943 2,311,483

UNITED STATES PATENT OFFICE

2,311,483

PRESSURE KNEE BRACE

William K. Smith, Pittsburgh, Pa., assignor of one-half to Howard E. Waite, Pittsburgh, Pa.

Application May 12, 1941, Serial No. 393,035

10 Claims. (Cl. 128—165)

My invention consists of a new and improved brace for the human knee joint.

The object which I have in view is the provision of a brace of this nature which will support a weak or impaired knee joint in such a manner as to exert the maximum pressure on the region of the knee condyles without interfering with the functions of the muscles and tendons, the blood circulation or the natural flexing and straightening of the joint.

The function of my knee brace may be said to be three-fold as it protects weak and torn lateral ligaments, crucial ligaments and injured semi-lunar cartilages.

For this purpose I have invented the knee brace herein described and claimed.

In the accompanying drawings, wherein is illustrated a practical embodiment of the principles of my invention, Fig. 1 is a front elevation of the knee brace intended for the left knee and shown in a flattened out or extended position.

Fig. 2 is a reverse or rear view of the brace extended.

Fig. 3 is a view similar to Fig. 1 except that the patella cap and its straps are omitted.

Fig. 4 is a front elevation of the patella cap.

Fig. 5 is a side elevation showing the knee brace applied to a flexed human limb.

Fig. 6 is a rear elevation of the same, the leg however being shown straightened.

Referring to the drawings, wherein a brace for the left knee is illustrated, 10 and 11 indicate a pair of complementary pads formed of felt or other relatively soft material, each comprising a body portion 12 cut in arcuate form, somewhat less than semi-annular, and the extremities of which are disposed at a bias as indicated at 13 to provide a clearance when the pads are cupped about the patella and fit against the condyles of the knee joint. The central opening 14, formed when the pads are assembled, exposes the wearer's patella.

Due to the fact that the contour at the medial side of the knee joint is greater than that at the lateral side thereof, the pad 11, which fits against the medial side of the knee joint, is larger than the pad 10, thus extending rearwardly sufficiently to protect the structures associated with the medial condyles.

The pad 10, which fits against the lateral or outer side of the knee joint, is provided with a centrally located integral radial arm 15, and the pad 11, which fits against the medial or inner side of the knee joint, is provided with a similar arm 16 which extends from the pad at approximately the angle of the popliteal fossa.

The arm 16 is the longer, and when the knee brace is applied to the wearer's leg extends outwardly across the popliteal fossa at an upward inclined of about fifteen degrees to meet the arm 15. At the roots of the arms 15 and 16 the material of the pads is cut as at 17 to provide more flexibility for the pads.

The pads 10 and 11 are provided, respectively, with the outer leather coverings or facings 18 and 19, which are cemented, sewed or otherwise secured to the material of the pads. To stiffen the pads at the side and thereby provide better protection from injury the medial and lateral ligaments and to grip the condyles more firmly, relatively small and properly curved plates of metal 20 are inserted between the pads and the facings and secured as by riveting to the leather. These plates are indicated in dotted lines in Figs. 1 and 3.

The leather facing 18 is provided with a radially extending tongue of leather 21 which overlies and is secured to the arm 15 of the pad 10, and has its outer portion doubled back on its self to secure thereto the buckle 22, and thence extends inwardly and again doubled under and outwardly to form a loop 23.

The facing 19 is provided with a radial extension 24 which overlies and is secured to the arm 16 of the pad 11. 25 indicates a leather strap, the inner end of which is doubled and fastened, as by rivets, to the inner end of the extension 24 to form a loop 26. The free end of the strap 25 overlies and is secured to the extension 24 and extends beyond the same and the arm 16 and is provided with buckle holes 27.

It is to be noted that the loops 23 and 26 are positioned at the rear of the axis of the knee joint, and in the plane of and in front of the popliteal fossa.

The two pads are held in predetermined, adjusted spaced relation by the upper and lower laces 28 and 29 which engage rows of eyelet-holes in the opposed ends of the leather facings 18 and 19.

30 indicates the patella cap, cut from leather and which is of the general shape illustrated, having a downwardly narrowing central opening 31 of sufficient dimension to slightly more than span the dimensions of the patella.

At either side of the perimetral wall of the cap 30 the leather is notched inwardly as at 32 so that the cap will cup to fit the contour of the knee and flex readily when in use, in obedience

to the flexing and straightening of the wearer's leg.

At each side of the cap there is attached thereto the forked leather strap 33 which straddle the notches 32, and to the apices of which forked straps are connected the leather cords 34 which are threaded upwardly through the loops 23 and 26, respectively, and have their free ends broadened into straps so that the end of one of the cords may be provided with a buckle 35 and the other end provided with buckle holes 36. 34a indicates keepers cut from the leather facings to guide the cords and keep them in proper place. Thus the straps may be connected together and adjustably tautened to aid in pulling the cap to fit the contour of the knee and to hold it in proper position about the patella. Instead of the loops 23 and 27 to slidably support the cords 34, it is obvious that pulleys or pivot pins may be provided.

The cap 30 is suspended swingingly in place by the two short straps 37, the upper ends of which are riveted to the facings 18 and 19, which short straps prevent the cap from slipping down out of place while the brace is in service.

The arm 16 of the brace should be approximately from one inch to one inch and one-half in width, and, when the brace is in position, will extend across the popliteal fossa upwardly at an angle to suit that of the popliteal space, which is usually approximately fifteen degrees to the horizontal.

In applying the brace to the human knee, the arms 15 and 16 are brought together around the popliteal space and the strap 25 inserted through the buckle 22 and buckled therein. Then with the leg fully straightened the laces 28 and 29 are tightened so that the pads 10 and 11 fit snugly about the patella. This adjustment applies pressure about the entire joint, which pressure is slightly increased as the leg is completely flexed.

The leg is now flexed to the degree where there is a minimum of pressure about the joint; this occurs when the leg is at an angle of somewhere between thirty and fifty degrees. Then the straps 34 are connected and tightened until the cap 30 is pulled down snugly around the patella.

This adjustment provides pressure about the joint, mainly about the front and sides thereof, which pressure increases slightly as the joint is straightened to its maximum.

The angular position of the arm 16 across the popliteal space is of vital importance and must be maintained as even a relatively slight deviation interferes with the normal movement of the joint and causes great discomfort due to binding the tendons of the medial hamstring muscles. Furthermore such deviation tends to impair blood circulation in the knee region.

Due to the fact that the points of change of direction of the cords 34, to wit, the loops 23 and 26, or their substitutes, are positioned to the rear of the axis of the knee joint and in the plane of the popliteal fossa, as the knee joint is straightened, the portions of the cords between the loops 23 and 26 and the cap 31 tend to shorten, owing to the pull exerted on the other and connected portions of the cords.

Thus as the knee straightens the pressure applied by the cap 31 progressively increases, and, as heretofore explained, as the knee flexes toward its maximum the pressure exerted by the pads 10 and 11 increase, thus maintaining constant pressure on the knee joint.

My improved knee brace is in successful use by athletes whose knees have been injured and are weak, and this use has been attended with great success, the wearers being enabled to continue playing without discomfort or danger of permanent injury. The injured or weakened joint is supported in such a manner as not only to provide needed protection but also to give substantially complete freedom of movement. The pressure maintained about the knee joint tends to prevent the tibia and fibula from sliding relative to each other.

I claim:

1. In a knee brace structure, the combination of a pad member apertured to fit around the patella and extend rearwardly to protect the structures associated with the lateral and medial condyles, means connecting the rear ends of the pad across the popliteal space to hold the pad in place on the knee, a cap apertured to provide clearance for the patella and movably mounted on the front face of the pad, and means mounted on the pad for tightening the cap against the pad about the patella.

2. In a knee brace structure, the combination of a pad member apertured to fit around the patella, means connecting the rear of the pad across the popliteal space, a cap apertured to provide clearance for the patella and movably mounted on the front face of the pad, and cords slidably mounted on the pad to tighten the cap against the pad.

3. In a knee brace, the combination of a pad member apertured to surround the patella and extend rearwardly to protect the structures associated with the medial and lateral condyles, means tautly connecting the sides of the pad member across the popliteal space, a cap apertured to provide clearance for the patella and movably supported on the face of the pad member, and cords attached to the opposite sides of the cap and led first rearwardly and then upwardly on the front face of the pad member to be tautly connected together about the patella to hold the cap stationary relative to the pad member.

4. In a knee brace, the combination of a pad member apertured to surround the patella and extend rearwardly to protect the structures associated with the medial and lateral condyles, means tautly connecting the sides of the pad member across the popliteal space, a cap apertured to provide clearance for the patella and movably supported on the face of the pad member, and cords attached to the opposite sides of the cap and led first rearwardly and then upwardly to be tautly connected together above the patella, the points of change of direction of said cords being positioned in the rear of the axis of the knee and in the plane of the popliteal space.

5. In a knee brace structure, the combination of a two-part pad member shaped to surround the patella and extending rearwardly at either side to protect the structure associated with the medial and lateral condyles, means extending across the popliteal space to connect the pad members together, means drawing the pad parts together to fit about the patella, a cap movably supported on the front face of the pad-parts and apertured to provide clearance for the patella, and cords attached to the opposite sides of the cap and led first rearwardly and then upwardly to be tautly connected together above the patella.

6. In a knee brace structure, the combination

of a pad member centrally apertured to surround the patella and adapted, when the brace is in use, to extend rearwardly at either side of the knee to protect the structures associated with the lateral and medial condyles, and oppositely extending lateral and medial arms on said member and adapted, when the brace is in use, to be connected across the popliteal space, the lateral arm extending substantially horizontally and the medial arm being so disposed as to extend at an upward angle of about fifteen degrees to the horizontal from the medial side toward the lateral side of the knee joint to correspond approximately to the angle of the axis of the popliteal fossa.

7. In a knee brace structure, the combination of a two-part pad member, one of said pad parts adapted, when the brace is in use, to extend rearwardly at either side of the knee joint to protect the structures associated with the lateral and medial condyles respectively, said pad parts having their adjacent front extremities cut away to fit about the patella, flexible means connecting the adjacent ends of the pad parts above and below the patella, and means extending from the outer sides of the pad parts and adapted when the brace is in use, to extend across the popliteal fossa for connecting the pad parts together to fit the member snugly about the knee joint, said connecting means disposed at a downward incline at the angle of the axis of the popliteal space toward the medial side of the knee to prevent binding of the medial ligament.

8. In a knee brace structure, the combination of a pad having a central opening to provide clearance for the patella of the wearer, and said pad adapted, when the pad is in service, to extend rearwardly at either side of the knee to protect the structures associated with the lateral and medial sides of the knee joint respectively, a strap extending outwardly from each of the opposite sides of the pad, the strap on the lateral side of the pad extending in substantial alinement with the horizontal axis of the pad while the strap on the medial side of the pad is inclined upwardly and outwardly, said straps when connected together around the back of the wearer's knee joint forming a connection which is inclined downwardly toward the medial side of the knee to follow the axis of the popliteal fossa.

9. In a knee brace structure, the combination of a pad comprising a pair of opposed substantially crescent shaped pad-parts, having their adjacent ends at the top and bottom of the pad adjustably connected together to provide the required central aperture to clear the patella of the wearer, and said pad parts adapted, when the pad is in service, to extend rearwardly at either side of the knee to protect the structures associated with the lateral and medial sides of the knee joint respectively, a strap extending outwardly from each of said pad parts, the strap of the lateral pad member extending in substantial alinement with the horizontal axis of the pad while the strap of the medial pad member is inclined upwardly and outwardly, said straps when connected together around the back of the wearer's knee joint forming a connection which is inclined downwardly toward the medial side of the knee to follow the axis of the popliteal fossa.

10. In a knee brace structure, the combination of a pad having a central opening to provide clearance for the patella of the wearer, and said pad adapted, when the pad is in service, to extend rearwardly at either side of the knee to protect the structures associated with the lateral and medial sides of the knee joint respectively, a flexible strap extending outwardly from the medial side of the pad and inclined upwardly at an angle to the horizontal, and means carried by the lateral side of the pad for adjustably securing the free end of the strap thereto without disturbing the relative positions of the medial and lateral portions of the pad, said strap when drawn around the back of the wearer's knee joint forming a connection which is inclined downwardly toward the medial side of the knee to follow the axis of the popliteal fossa.

WILLIAM K. SMITH.