United States Patent [19]

Okuyama et al.

[11] **Patent Number: Des. 297,433**

[45] **Date of Patent: ** Aug. 30, 1988**

[54] **TRACTOR**

[75] Inventors: **Shigeaki Okuyama**, Kawachinagano; **Norimi Nakamura**, Sakai; **Osami Fujiwara**, Kishiwada; **Kunisuke Nakamura**, Sakai; **Genichi Funabashi**, Sennan, all of Japan

[73] Assignee: **Kubota, Limited**, Osaka, Japan

[**] Term: **14 Years**

[21] Appl. No.: **772,529**

[22] Filed: **Sep. 4, 1985**

[52] **U.S. Cl.** **D15/23**

[58] **Field of Search** ..... D15/10–12, D15/15, 22–23, 25–26, 28, 30–33; 180/89.12, 89.1, 89.19; 56/320.1, 320.2, DIG. 22, 13.4

[56] **References Cited**

U.S. PATENT DOCUMENTS

D. 193,180	7/1962	Bowman et al.	D15/23
D. 195,833	8/1963	Shelton et al.	D15/23
D. 230,298	2/1974	Purcell et al.	D15/23

OTHER PUBLICATIONS

Modern Materials Handling, Nov. 1961, p. 45, "Tractor" (top left corner).

Implement & Tractor, 11/1984, p. 43, "Agria Tractors".

Primary Examiner—Wallace R. Burke

Assistant Examiner—Ruth Takemoto

Attorney, Agent, or Firm—Edwin E. Greigg

[57] **CLAIM**

The ornamental design of a tractor, as shown and described.

DESCRIPTION

FIG. **1** is a right side elevational view of a tractor showing our new design;

FIG. **2** is a left side elevational view thereof;

FIG. **3** is a top plan view thereof;

FIG. **4** is a front elevational view thereof; and

FIG. **5** is a rear elevational view thereof.

The tires shown in FIGS. **1–5** are shown in broken lines for illustrative purposes only and form no part of the claimed design.

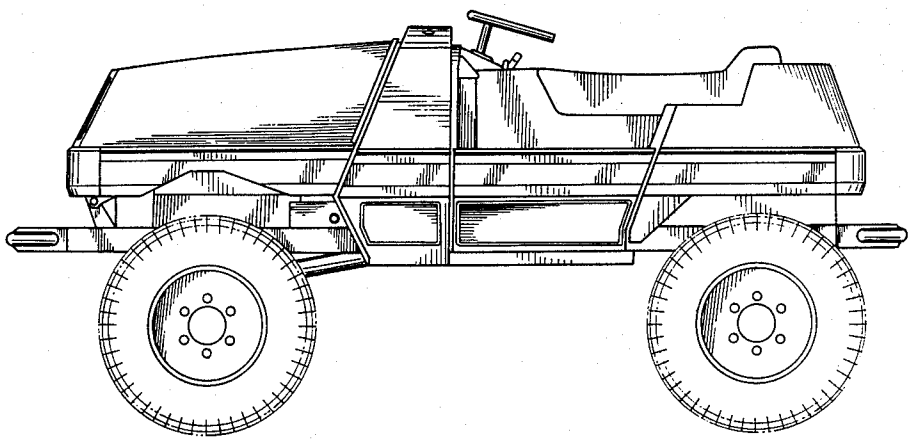

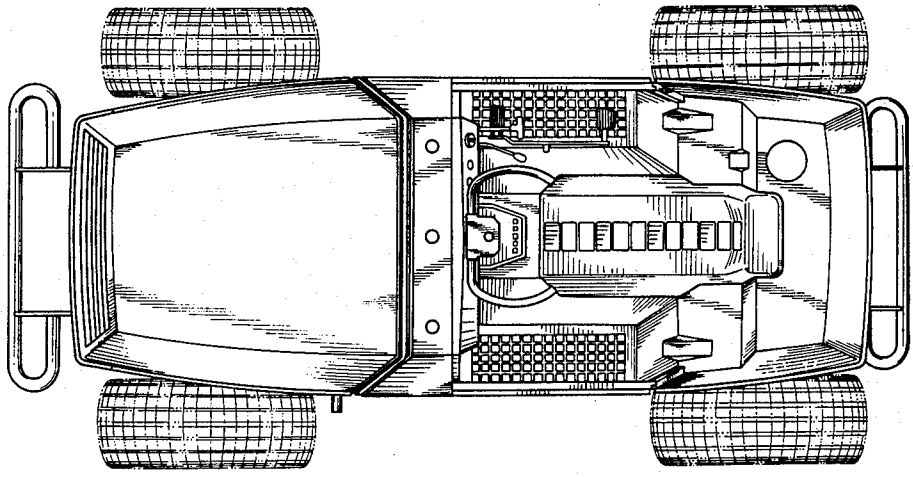

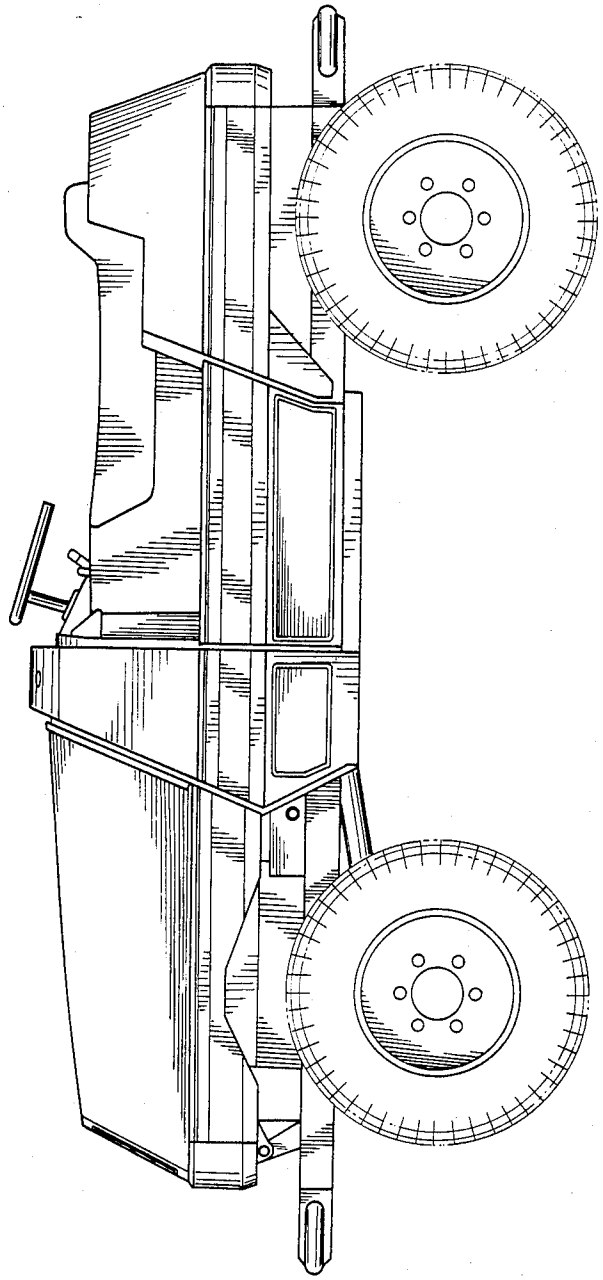

Fig. 1

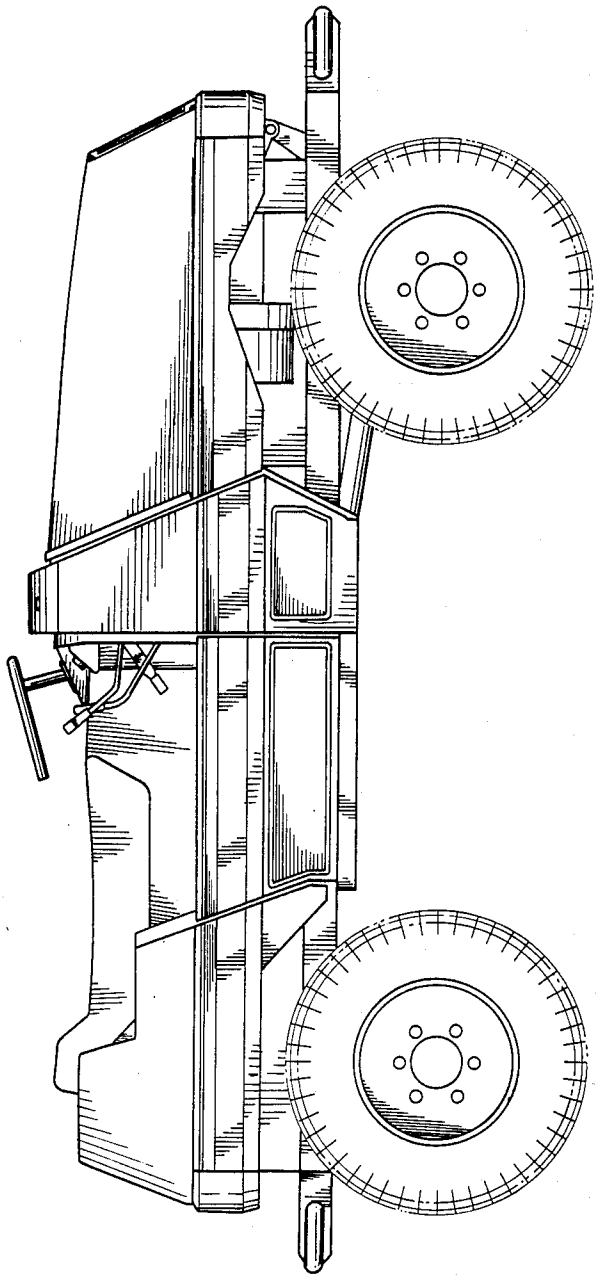

Fig. 2

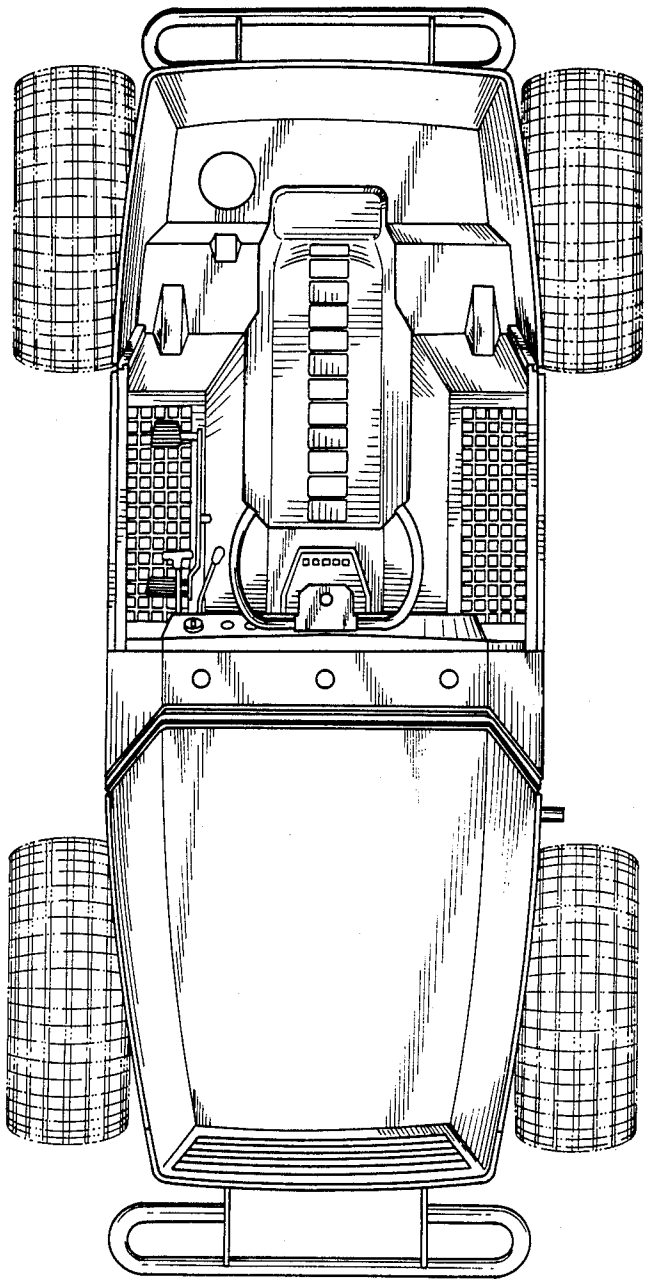

Fig. 3

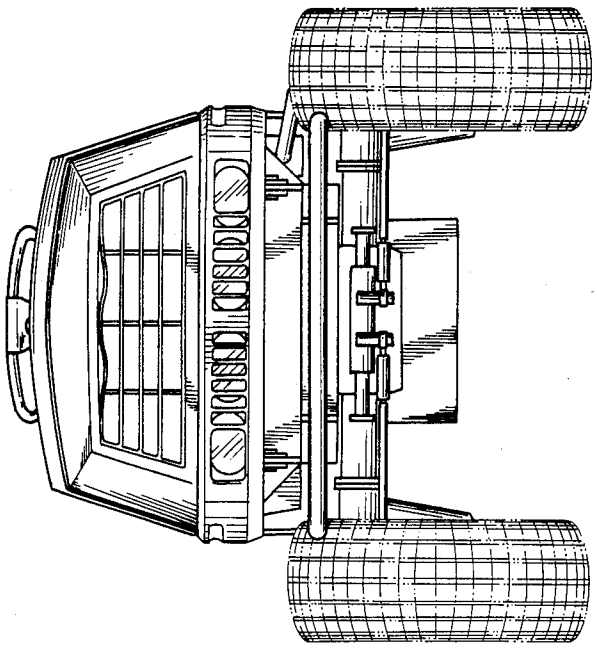

Fig. 4

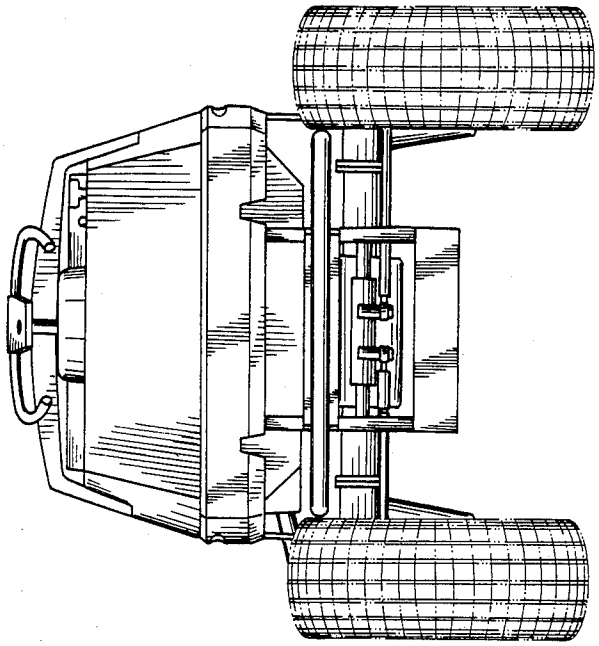

Fig. 5