Oct. 17, 1939. E. J. COOK 2,176,666

DUPLICATING MACHINE

Filed March 14, 1938 6 Sheets-Sheet 1

FIG. 1

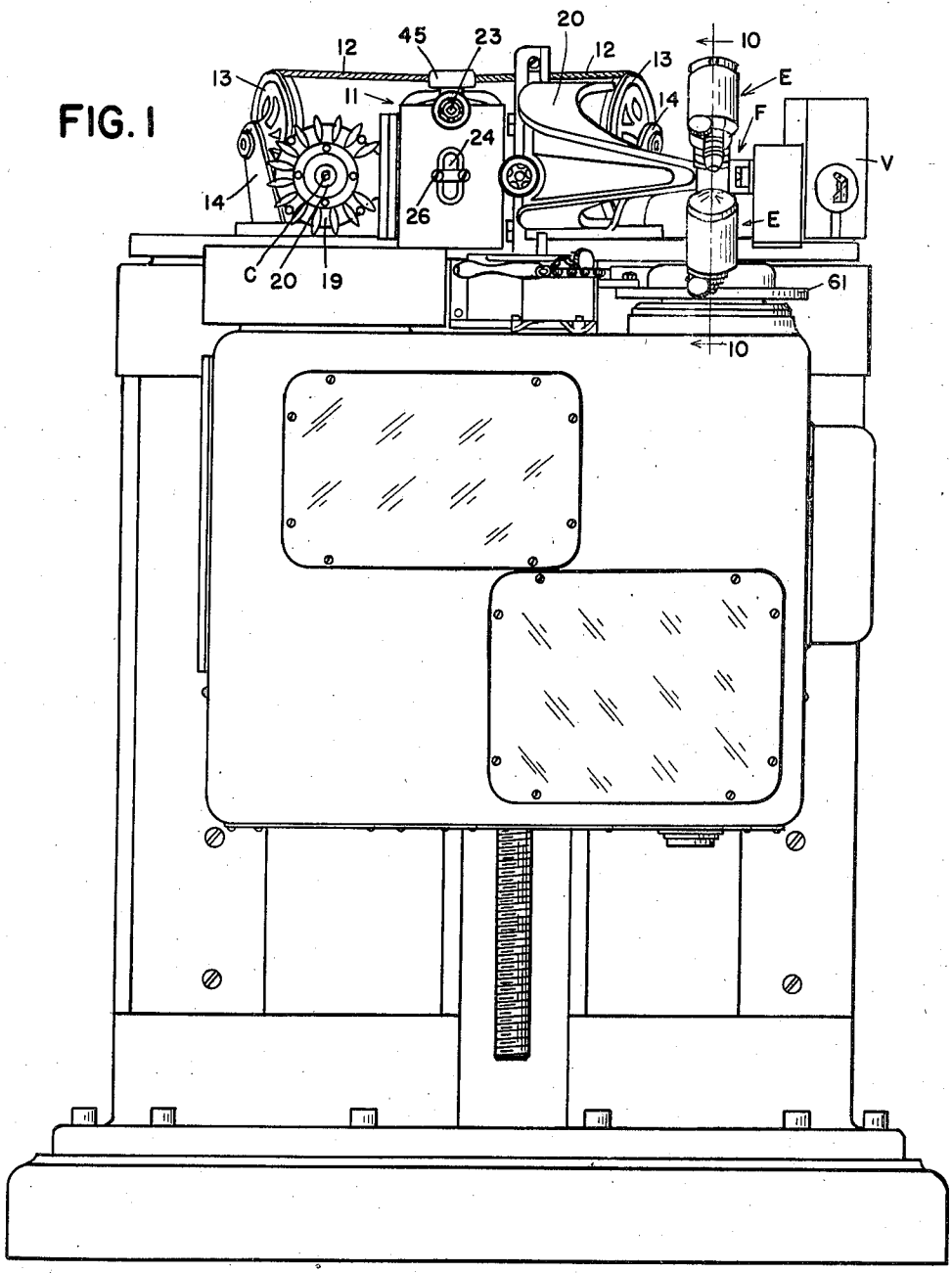

INVENTOR
EVERETT J. COOK
BY Whittemore Hulbert & Belknap
ATTORNEYS

Oct. 17, 1939. E. J. COOK 2,176,666

DUPLICATING MACHINE

Filed March 14, 1938 6 Sheets-Sheet 2

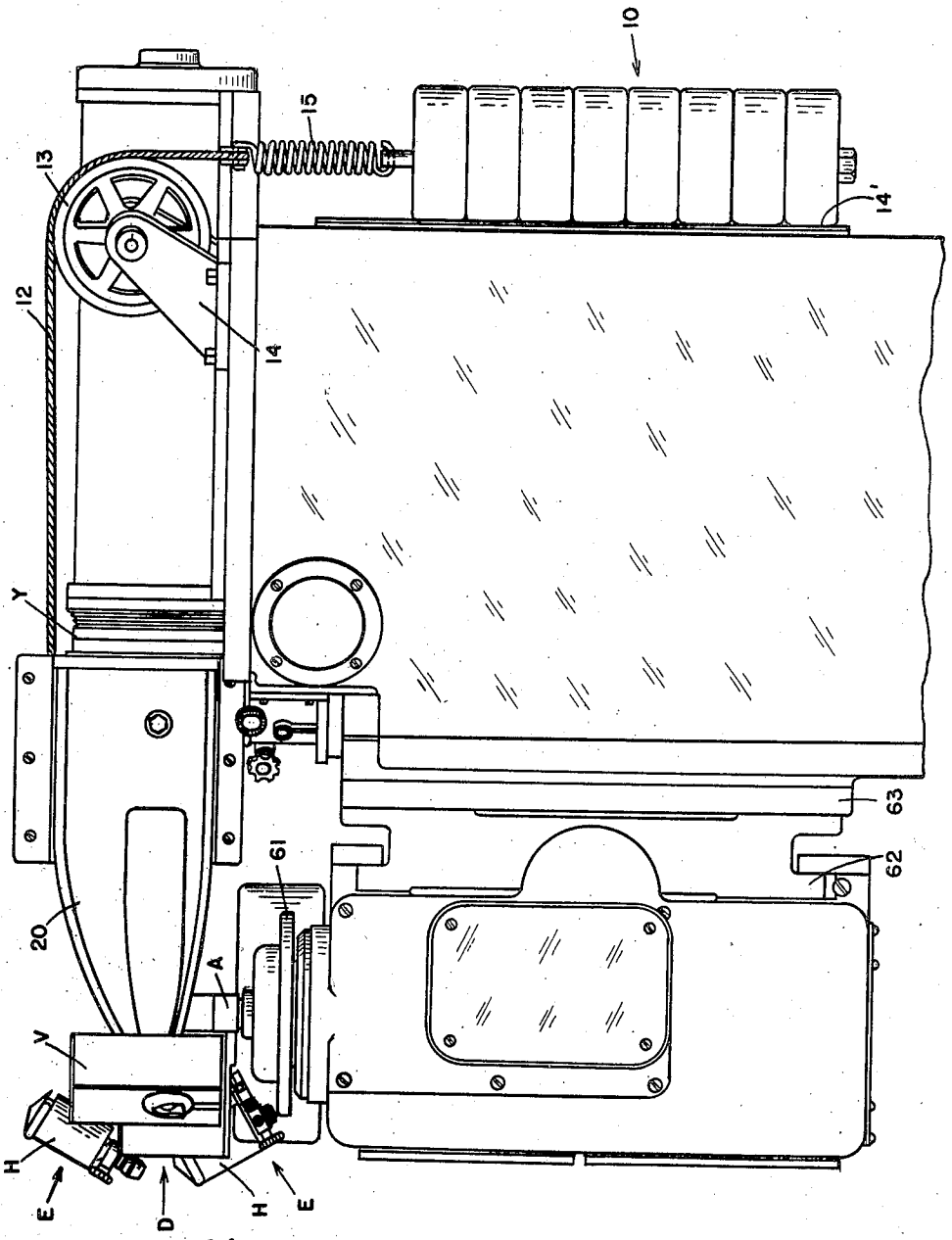

FIG.2

INVENTOR
EVERETT J. COOK

BY Whittemore Hulbert & Belknap

ATTORNEYS

Oct. 17, 1939. E. J. COOK 2,176,666

DUPLICATING MACHINE

Filed March 14, 1938 6 Sheets-Sheet 3

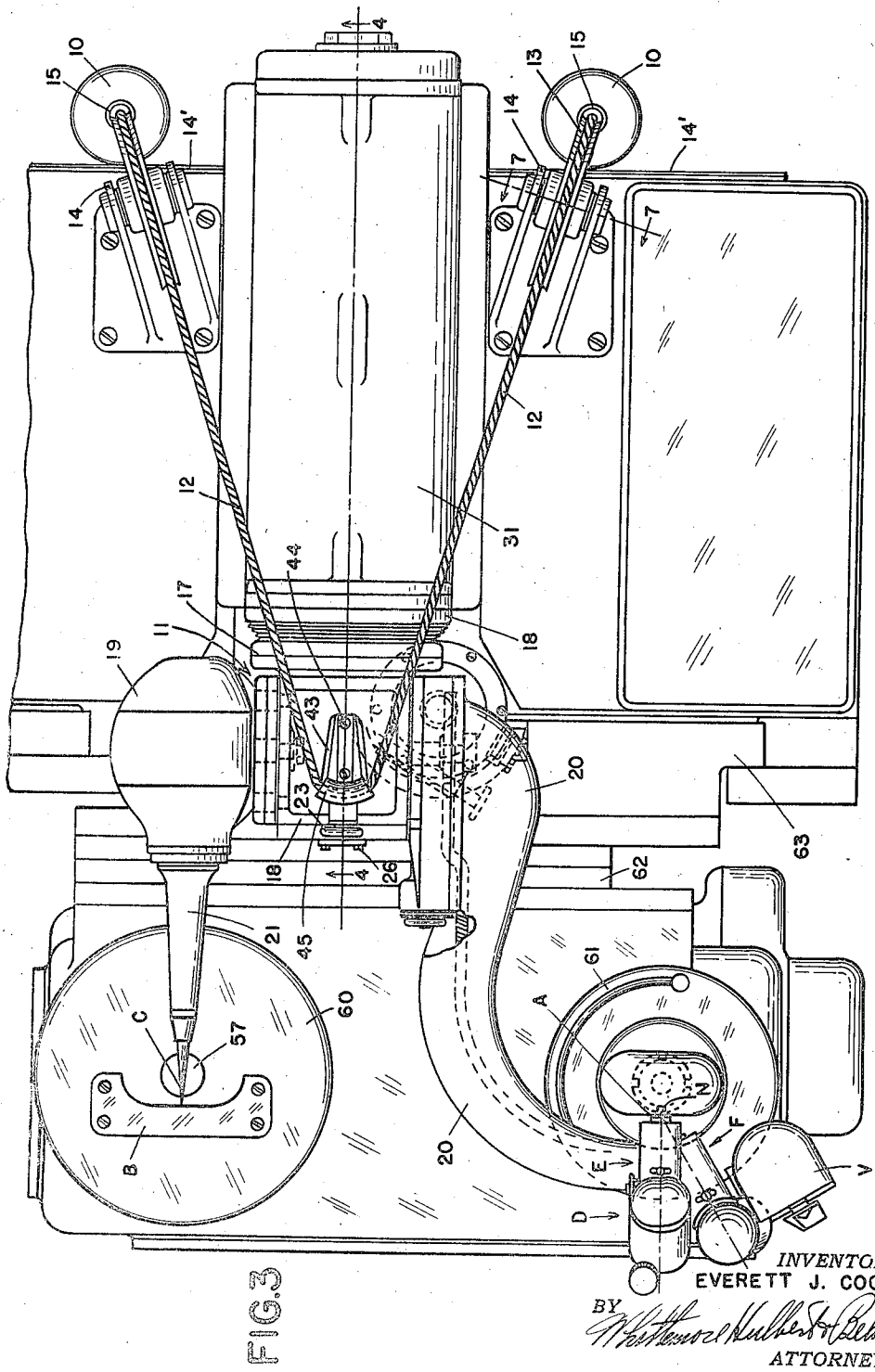

FIG. 3

INVENTOR
EVERETT J. COOK
BY Whittemore Hulbert & Belknap
ATTORNEYS

Oct. 17, 1939. E. J. COOK 2,176,666

DUPLICATING MACHINE

Filed March 14, 1938 6 Sheets-Sheet 4

FIG. 4

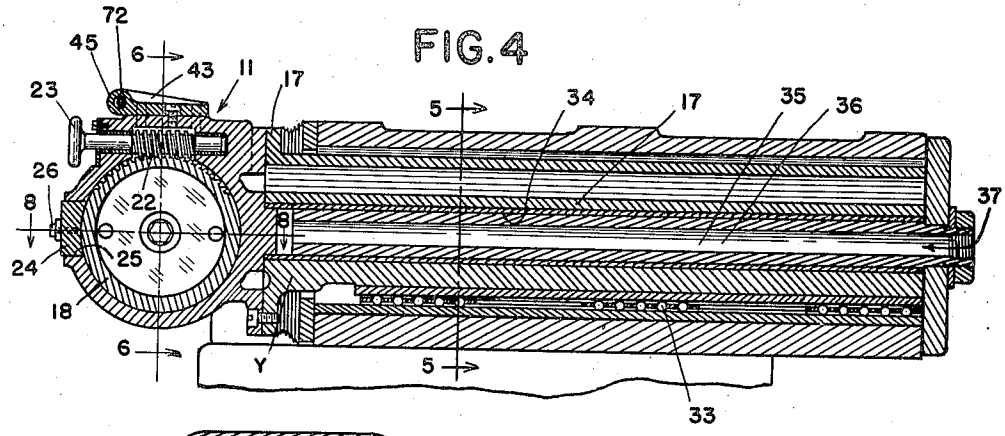

FIG. 5

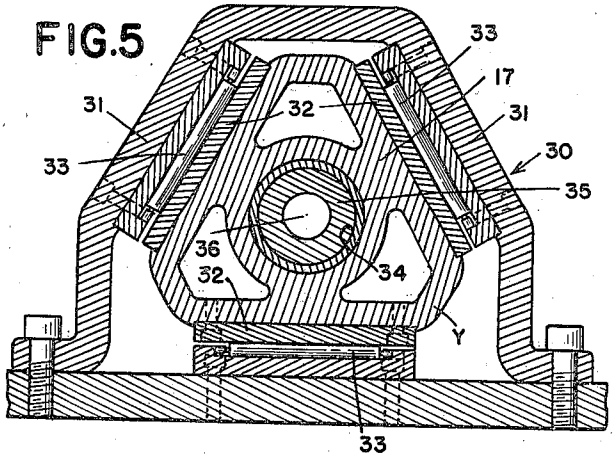

FIG. 7

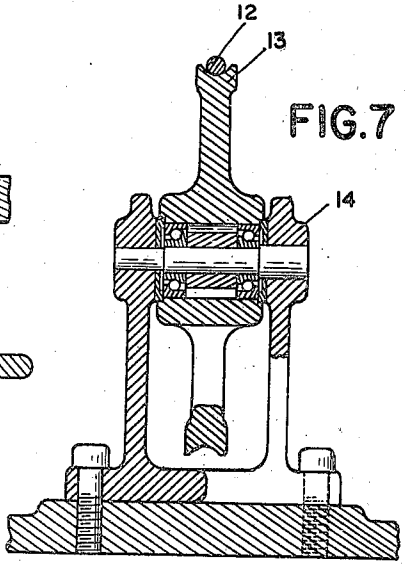

FIG. 6

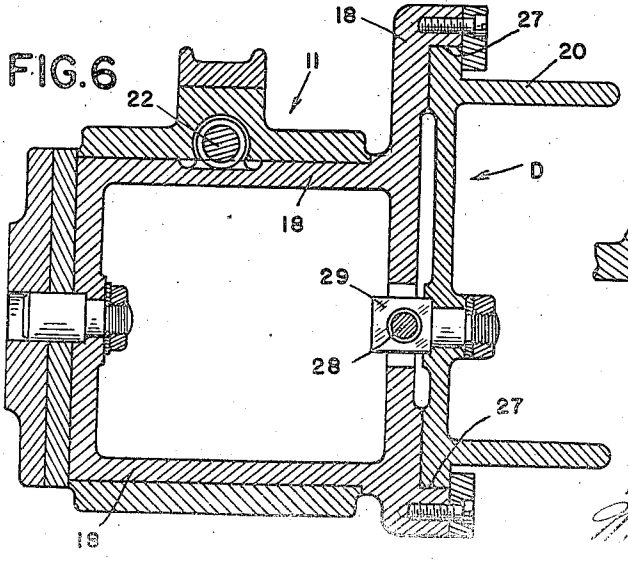

INVENTOR
EVERETT J. COOK
BY Whittemore Hulbert & Belknap
ATTORNEYS

Oct. 17, 1939. E. J. COOK 2,176,666

DUPLICATING MACHINE

Filed March 14, 1938 6 Sheets-Sheet 5

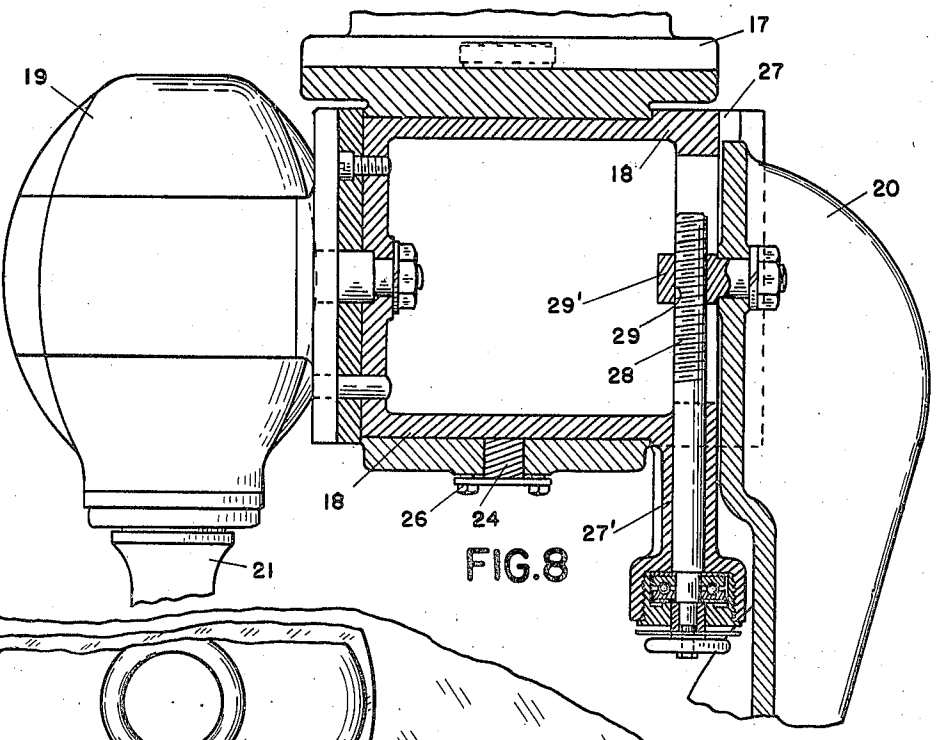

FIG. 8

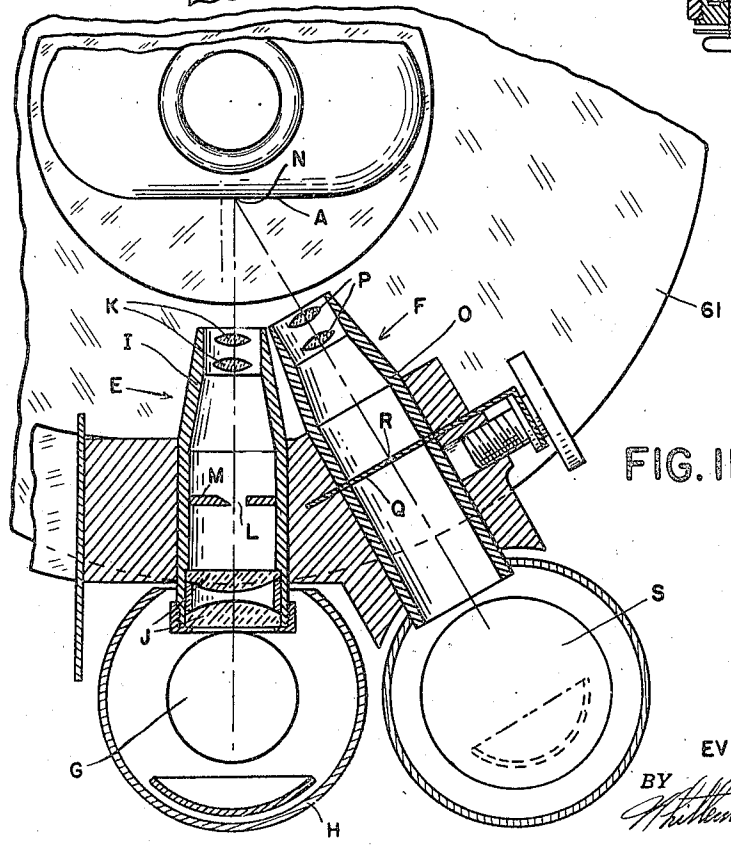

FIG. 11

INVENTOR
EVERETT J. COOK

BY Whittemore, Hulbert & Belknap

ATTORNEYS

Oct. 17, 1939. E. J. COOK 2,176,666

DUPLICATING MACHINE

Filed March 14, 1938 6 Sheets-Sheet 6

FIG. 9

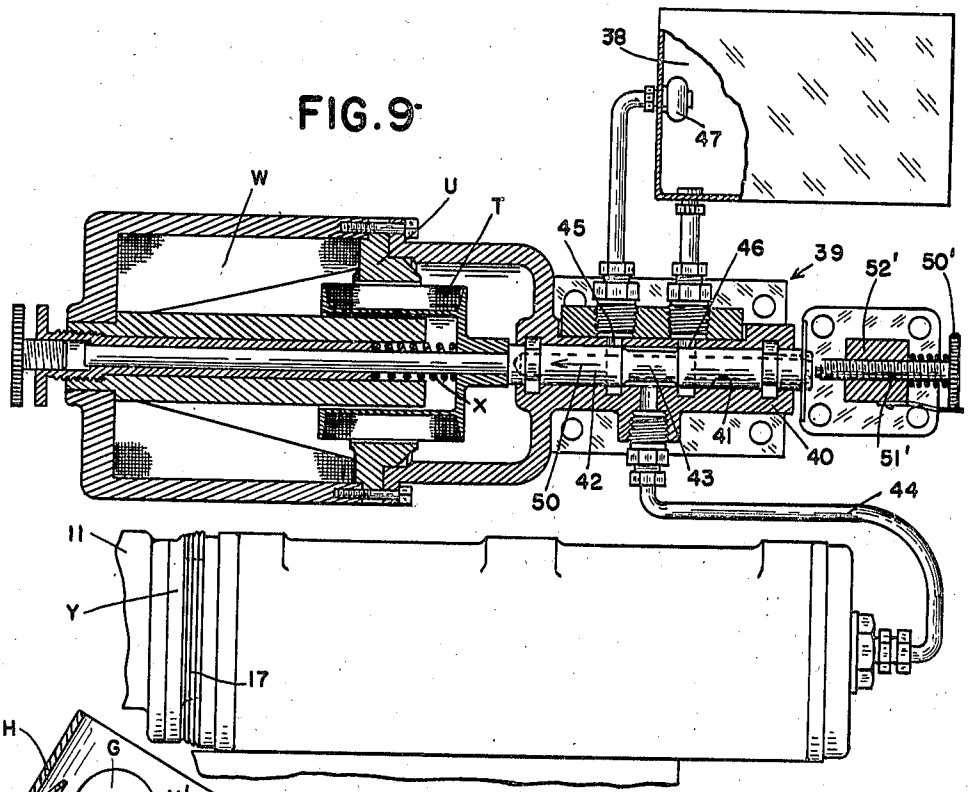

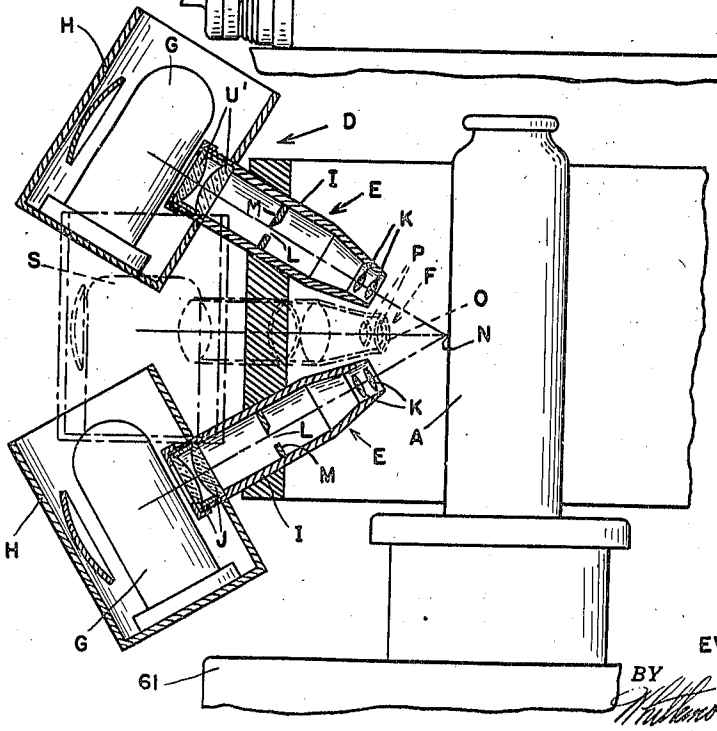

FIG. 10

INVENTOR
EVERETT J. COOK

BY Watson Hubbard & Belknap
ATTORNEYS

Patented Oct. 17, 1939

2,176,666

UNITED STATES PATENT OFFICE

2,176,666

DUPLICATING MACHINE

Everett J. Cook, Toledo, Ohio, assignor to H. H. Buggie & Company, Toledo, Ohio, a corporation of Ohio

Application March 14, 1938, Serial No. 195,925

17 Claims. (Cl. 90—13.5)

This invention relates generally to duplicating machines and refers more particularly to reproducing apparatus wherein the cutting tool is controlled from a pattern through the medium of a photosensitive cell.

It is one of the principal objects of this invention to improve generally reproducing machines of the type previously set forth and to incorporate means in the machine rendering it possible to provide a smoother finish on the surface of the work being fashioned.

In forming a replica of a record or pattern, it has been proposed to scan the record with an optical unit including a light projector and a light sensitive cell so arranged with respect to each other and the pattern that the projector casts an illuminated image on the pattern having a contour line representing one section of the pattern as viewed through an aperture located in front of the light sensitive cell. As the pattern is scanned by the optical unit, the aperture alternately intercepts the illuminated and shaded portions of the image. When the aperture intercepts the illuminated area of the image to such an extent that sufficient light is cast on the photosensitve plate of the cell to cause an electron flow in the latter, the optical unit is moved relative to the pattern in a direction to return the aperture toward the shaded portion of the image and, when the aperture intercepts the shaded area of the image, the optical unit is moved in another direction relative to the pattern to effect movement of the aperture toward the illuminated area of the image. With this arrangement, the aperture is maintained on the contour line and by effecting corresponding movement of the tool, an exact replica of the pattern is fashioned in the work blank.

Although with a highly sensitive photoelectric cell the extent of alternate movement of the aperture into the shaded and illuminated areas of the image on opposite sides of the contour line may be slight, nevertheless, this continuous alternate movement required to maintain the aperture on the contour line imparts a constant reciprocable movement in the form of a vibration to the optical unit and tool controlled thereby, with the result that minute undulations appear on the surface of the work being fashioned by the tool. In accordance with this invention, the number of vibrations required to maintain the aperture on the contour line of the image is appreciably reduced and, as a result, the tool is capable of cutting a smoother finish on the surface of the work.

Another advantageous feature of the present invention resides in the novel means provided herein for effecting movement of the optical unit and tool toward and away from the pattern and work, respectively, in dependence upon variations in the contour of the surface of the pattern being scanned by the optical unit. In accordance with this invention, the tool and the optical unit are mounted upon common reciprocable supporting means, and the latter is normally urged in one direction by weights having the additional function of dampening the continuous vibration aforesaid of the tool and optical unit.

A further feature of this invention resides in the provsion of means in the connection between the weights and supporting means aforesaid effective to relieve the supporting means from the inertia of the weights upon limited movement of the supporting means against the action of the weights.

In addition to the foregoing, the present invention contemplates means for adjusting both the optical unit and tool to accurately position these elements with respect to the pattern and work, respectively.

The foregoing, as well as other objects, will be made more apparent as this description proceeds, especially when considered in connection with the accompanying drawings, wherein:

Figure 1 is a front elevational view of a reproducing machine constructed in accordance with the present invention;

Figure 2 is a side elevational view of the machine shown in Figure 1;

Figure 3 is a top plan view of the construction shown in Fgure 1;

Figure 4 is a sectional view taken substantially on the plane indicated by the line 4—4 of Figure 3;

Figure 5 is a cross sectional view taken on the plane indicated by the line 5—5 of Figure 4;

Figure 6 is a sectional view taken on the plane indicated by the line 6—6 of Figure 4;

Figure 7 is a sectional view taken on the line 7—7 of Figure 3;

Figure 8 is a sectional view taken on the line 8—8 of Figure 4;

Figure 9 is a diagrammatic view of certain of the working parts of the apparatus;

Figure 10 is a sectional view taken substantially on the plane indicated by the line 10—10 of Figure 1; and

Figure 11 is a sectional plan view of the optical unit showing one projector and the photoelectric cell in section.

For the purpose of illustrating the present invention, I have selected a machine for fashioning a mold cavity in a work blank to the exact size and shape of the article it is desired to cast, although it is to be understood that the principles involved are not limited to this specific embodiment of the invention. As a matter of fact, the present invention is applicable to any combination where a fashioning tool is controlled by a light sensitive cell which, in turn, is controlled by the record or contours of the pattern to be reproduced.

In accordance with the specific embodiment of the invention, the mold cavity is formed of two halves which may, or may not be complementary, depending upon the particular contour of the article to be formed. However, the principle of operation of the apparatus is the same in forming the two halves of the mold and, for this reason, reference will be made hereinafter to the formation of only one-half of the mold cavity. In general, the reference character A designates a pattern having a good light reflecting surface and corresponding exactly in shape and size to the article it is desired to cast in the mold cavity. Supported to one side of the patern A is a work blank B within which a cavity corresponding exactly to one-half of the pattern A is cut by a suitable tool C. In the present instance, the half of the surface aforesaid of the pattern A is scanned by an optical unit D supported at the outer side of the pattern A for movement toward and away from the latter side of the pattern in a manner to be more fully hereinafter set forth. The optical unit D comprises light projectors E and a photoelectric cell device F. Each light projector E has a source of illumination G housed by a casing H and registering with the outer end of a lens barrel I having condenser lenses J secured in the outer end thereof and having objective lenses K secured in the inner end of the same. The axes of the barrels associated with the projectors lie in a common vertical plane normal to the outer surface of the pattern A and are inclined in such a manner that the light beams intersect at the surface of the pattern A. The shape of the light beams cast on the outer surface of the pattern A is determined by slots L formed in diaphragms M located in the lens barrels between the two sets of lenses. The location and shape of the slots L through the diaphragms M is so determined that an image is cast on the outer surface of the pattern having a sharply defined contour line N which separates the illuminated portion of the image from the shaded portion thereof.

The photoelectric cell device F is also provided with a lens barrel O fixed with respect to the projector lens barrels I with its axis extending at an angle to the axes of the lens barrels I and having lenses P secured in the inner end thereof. The fixed angular relationship between the axes of the several lens barrels is so determined that these axes intersect the contour line N of the image at the outer surface of the pattern A. The light reflected from the image, cast on the outer surface of the pattern A by the projector, is focused by the lenses P on the plate Q having an aperture R therethrough located substantially on the axis of the lens barrel O. A light sensitive cell S is supported in a casing at the outer side of the plate Q in a manner to be effected by the light escaping through the aperture R in the plate Q.

From the foregoing, it will be noted that the image cast on the outer surface of the pattern A by the projectors E is reflected on the inner surface of the plate Q with the contour line N intersecting the aperture R through the plate Q. With this in mind and remembering that the angle between the axes of the lens barrels is fixed, it will be noted that as the outer surface of the pattern A approaches the optical unit D, the image reflected on the plate Q is moved relative to the plate in a direction to diminish the amount of light passing through the aperture R to the photosensitive cell. When the intensity of light passing through the aperture R is reduced to such an extent as to discontinue the electron flow in the photosensitive cell proper S, the load coil T of the electromagnet U is energized through the medium of an amplifier, designated generally by the reference character V, and characterized in that the same is rendered conductive when the flow of current through the photoelectric cell is discontinued. It may be briefly stated at this point that an amplifier capable of performing this result is shown and described in detail in my copending application, Serial No. 146,943, filed June 7, 1937.

When the coil T of the electromagnet U is energized, the same is moved into the magnetic field W against the action of the spring X and causes the ram Y to move the optical unit D relative to the pattern A in a direction away from the latter. Movement of the optical unit D in the latter direction effects a movement of the image on the plate Q of the photoelectric cell unit in a direction toward the aperture R to increase the intensity of the light passing through the aperture to the light sensitive cell S. When the intensity of the light becomes sufficient to effect the electron flow in the cell S required for the passage of current through the latter, the amplifier V is rendered non-conductive and the load coil T of the electromagnet is de-energized permitting the spring X to move the load coil out of the permanent magnetic field W. Movement of the load coil T under the action of the spring X causes the ram Y to move in the opposite direction or, in other words, effects movement of the optical unit D in a direction toward the pattern A. This movement tends to decrease the intensity of the light passing through the aperture R through the photoelectric cell S and in a manner previously set forth effects a movement of the optical unit D in a direction away from the pattern A.

From the foregoing, it will be noted that the aperture alternately intercepts the illuminated and shaded areas of the image to maintain the aperture R on the contour line N of the image. In other words, the optical unit D reciprocates or vibrates constantly toward and away from the pattern in order to maintain the aperture R on the contour line N of the image. As will be presently set forth, provision is made herein for scanning the entire surface of the pattern to be reproduced by the image so that it necessarily follows that movement of the optical unit toward and away from the pattern is controlled by the contour of the surface of the pattern scanned.

In the present instance, the tool C is connected to the optical unit D for movement therewith as a unit relative to the work B. However, in order to cut a recess in the work blank corresponding to the outer surface of the pattern A, the tool C is mounted at the inner side of the work blank. As a result, movement of the optical unit D toward the pattern causes the tool

to withdraw from the work and movement of the optical unit D away from the pattern by the electromagnet T effects a movement of the tool C in a direction toward the work blank. In this manner, a recess having the exact shape and size of the surface of the pattern scanned is cut by the tool C in the work blank.

Inasmuch as the tool C is movable as a unit with the optical unit D, it follows that this tool will also vibrate or reciprocate with the optical unit and, as a result, slight undulations are formed in the surface of the work by the tool. It is one object of the present invention to appreciably reduce these undulations in the surface of the work by minimizing the vibratory movement of the optical unit and tool C. In general, this is accomplished by suspending weights 10 from a common support 11 for the optical unit D and tool C. As shown in Figures 1 and 2, the weights are attached to the free ends of a flexible cable 12 having the intermediate portion clamped to the support 11. The free ends of the cable extend in a direction away from the pattern and work, and are reeved over pulleys 13 rotatably supported on the outer end of the machine frame by means of brackets 14. The weights are suspended from the extremities of the cable by means of coil springs 15 and the pulleys are so positioned that the inner sides of the weights are, to some extent, guided by the wear plates 14' at the outer side of the machine frame. The construction is such that the weights are responsive to de-energization of the electromagnet to move the support 11 in a direction to withdraw the tool from the work and to move the optical unit toward the pattern. The weights, of course, resist movement of the support 11 in the opposite direction and, as a result, have a steadying effect on the reciprocation of the support which tends to reduce or dampen the vibrations of the tool and optical unit. The springs 15 are for the purpose of minimizing the inertia of the weights upon movement of the support against the action of the weights in a direction to feed the tool into the work.

Referring now more in detail to the specific construction of the machine selected for the purpose of illustrating this invention, it will be noted that the numeral 17 indicates a ram supported for reciprocation in a horizontal plane toward and away from the pattern A and work blank B. The support or head 11 is secured to the inner end of the ram for movement as a unit with the latter and carries both the tool C and optical unit D. Upon reference to Figures 3 and 8, it will be observed that the tool C and optical unit D are respectively secured to opposite ends of a trunnion 18 mounted in the head 11 for rocking movement in a vertical plane. In Figure 3, an electric motor 19 is shown as secured on the end of the trunnion adjacent the work blank B and an arm 20 is fastened to the opposite end of the trunnion adjacent the pattern A. The tool C is secured directly to the drive shaft of the motor 19 through the medium of a holder 21 and assumes a position opposite the inner side of the work blank. The optical unit D is secured to the free end of the arm 20, and the latter end of the arm extends to a position at the outer side of the pattern A.

It follows from the above that rocking the trunnion in the head 11 of the ram 17 adjusts both the optical unit D and the tool C relative to the pattern A and work blank B, respectively. As shown in Figure 4, a portion of the top surface of the trunnion is fashioned with teeth adapted to mesh with a worm 22 rotatably supported in the head 11 on the ram 17. The worm 22 is manually adjustable by manipulating a suitable hand wheel 23 and the trunnion is held in any one of its several adjusted positions by a clamp 24 in the form of a block. The clamp or block 24 is inserted in a recess 25 formed in one side of the head 11 and is fashioned with an arcuate inner surface adapted to be clamped against the adjacent surface of the trunnion by means of the screws 26.

As shown particularly in Figure 6, the arm 20 is slidably secured to the trunnion 18 for the purpose of adjusting the point of the tool C with reference to the point of intersection of the aperture R and contour line N. In detail, it will be noted that the arm 20 is slidable relative to the trunnion in directions toward and away from the ram 17. However, it should be understood that although the optical system D is carried by the arm, the focal distance or the distance between the optical system and pattern remains substantially constant, irrespective of adjustment of the arm 20 in either of the above directions relative to the ram. In other words, as clearly pointed out above, the aperture R is maintained in intersecting relationship with the contour line N of the illuminated image and, as a consequence, any adjustment of the arm 20 toward the ram 17 causes a greater proportion of the area of the aperture R to intercept the dark area at one side of the contour line, with the result that the intensity of light admitted to the light sensitive cell F is reduced to such an extent that the ram 17 and tool C are moved against the action of the weights 10 by the electromagnet U. On the other hand, any adjustment of the arm 20 in the opposite direction away from the ram 17 causes a greater portion of the area of the aperture R to intercept the illuminated area of the image at the opposite side of the contour line, with the result that the intensity of light admitted to the light sensitive cell F is increased to such an extent that the electromagnet U is de-energized sufficiently to permit the weights 10 to move the ram 17 and tool C in a direction away from the work blank. Thus, it will be observed that any adjustment of the arm 20 relative to the ram in the direction of reciprocation of the ram effects a variation in the position of the cutting end of the tool relative to the work blank.

Referring now more specifically to the particular means provided herein for adjusting the arm, it will be noted that the arm is slidable in ways 27 extending in the direction of movement of the ram 17 and carried by the trunnion. A screw 28 is rotatably supported in an extension 27' of the trunnion in the manner shown in Figure 8 and has a portion threaded in a bore 29 formed in a lug 29' secured to the arm 20, with the result that rotation of the screw 28 effects a sliding movement of the arm 20 relative to the trunnion 18 in one direction or the other, depending upon the direction of rotation of the screw 28.

Referring now more particularly to Figure 5 of the drawings, it will be observed that the ram 17 is substantially triangular in cross section and is slidable in a casing 30 having walls 31 parallel to the angular walls 32 of the ram. A set of needle bearings 33 is supported between the parallel walls of the ram and cylinder to reduce friction to a minimum. The ram is also

formed with a cylinder 34 therein and this cylinder slidably receives a piston 35 suitably fixed to the machine frame against movement with the ram. The piston 35 is axially bored, as at 36, and the outer end of the bore alternately communicates with a source of fluid under pressure 37 and a fluid supply tank 38 through the medium of a valve 39.

Upon reference to Figure 9, it will be noted that the valve 39 comprises a casing 40 having a bore 41 therethrough for slidably receiving a valve plunger 42. The plunger 42 is formed with a reduced portion 43 intermediate the ends thereof arranged in constant communication with the outer end of the bore 36 through the piston 35 by a conduit 44 and respectively establishing communication between the bore 36 and ports 45 and 46 upon movement of the plunger in opposite directions from the neutral position thereof shown in Figure 9. The port 45 communicates with the discharge side of a suitable pump 47 and the port 46 communicates with the tank. The construction is such that movement of the plunger 42 in the direction of the arrow 50 in Figure 9 establishes communication between the bore 36, through the piston 35, and the port 45 leading to the pump 47. Movement of the plunger 42 in an opposite direction establishes communication between the bore 36 and port 46 leading to the supply tank. The plunger is moved in the direction of the arrow 50 by the load coil T of the electromagnet and is moved in the opposite direction by the spring X. Accurate positioning of the plunger 42 is insured by means of an adjustment 50' having a screw 51' threaded in a fixed block 52' and forming an abutment for one end of the plunger.

In accordance with the present invention, the outer surface of the pattern A is completely scanned by the optical unit D and the work blank is correspondingly traversed by the tool C. The above is accomplished, in the present instance, by supporting both the work blank B and the pattern A on face plates, designated in Figure 3 by the reference characters 60 and 61, respectively. These face plates are correspondingly oscillated by suitable mechanism (not shown herein) and forming no part of the present invention. The face plates, in turn, are carried by a traversing slide 62 which, in turn, is supported on a vertically movable plate 63. The manner in which the slide 62 is reciprocated in a horizontal direction relative to the vertical slide 63 and the manner in which the latter slide is fed vertically forms no part of the present invention and may be effected in the manner defined in detail in my copending application Serial No. 120,134, filed January 11, 1937. It will suffice to point out herein that the combination of these movements provides for scanning the entire surface of the pattern to be reproduced by the optical unit D and effecting corresponding movement of the work blank B relative to the tool C.

Operation

When the aperture R of the photoelectric cell unit intercepts the shaded area of the image, the light sensitive cell S is rendered non-conductive and the amplifier becomes conductive to energize the load coil T of the electromagnet U. As a result, the load coil T is drawn into the field of the magnet and, in so doing, moves the valve plunger 42 in the direction of the arrow 50. This establishes communication between the outer end of the bore 36 through the piston 35 and the pressure pump 47. Accordingly, fluid under pressure flows through the piston 35 against the head 11 on the inner end of the ram 17 and moves the latter in a direction to feed the tool C into the work blank B. At the same time the optical unit D is moved in a direction away from the pattern A and this continues until the aperture R intercepts the light area of the image sufficiently to render the light sensitive cell conductive. The resultant flow of current through the light sensitive cell renders the amplifier non-conductive and de-energizes the load coil T of the electromagnet U. When this condition exists, the spring X moves the valve plunger 42 in the opposite direction to establish communication between the bore 36 and the supply tank 48. As a result, the pressure in the bore 36 drops and the weights 10 act to move the ram 17 in a direction to move the tool C in a direction away from the work blank and the optical unit D toward the pattern A. This movement of the ram continues until the aperture R again intercepts the shaded portion of the image sufficiently to render the light sensitive cell non-conductive whereupon the first stage of the above operation is repeated. It follows, therefore, that the aperture R of the photoelectric cell device is maintained on the contour line N of the image and the tool C is compelled to follow the movement of the optical unit required to maintain this relationship. Inasmuch as the contour line represents one section of the pattern A as viewed through the aperture R and in view of the fact that the entire surface of the pattern to be reproduced is scanned by the optical unit, it is apparent that an exact replica of this surface is produced in the work blank by the tool.

What I claim as my invention is:

1. In a duplicating machine, a support for a pattern having a surface to be duplicated, an optical unit for scanning the surface of the object to be reproduced and comprising a photoelectric cell device and an illuminating device operable to cast a light image on the surface of the object with a contour line representing one section of the surface as viewed from the photoelectric cell device, means for moving the optical unit in directions toward and away from the pattern to maintain the point of intersection of the scanning line of the photoelectric cell device and the contour line of the image on the surface of the pattern to be reproduced, and means for dampening the reciprocable movement of the optical unit required to maintain the scanning line of the photoelectric cell device on the contour line of the image.

2. In a duplicating machine, a support for a pattern having a surface to be duplicated, an optical unit for scanning the surface of the pattern to be duplicated comprising a photoelectric cell device and an illuminating device operable to cast a light image on the surface of the object to be reproduced having a contour line representing a section of the pattern as viewed from the photoelectric cell device, and means controlled by the photoelectric cell device for moving the optical unit in directions toward and away from the pattern to maintain the point of intersection of the scanning line of the photoelectric cell device and the contour line of the image at the surface of the pattern to be reproduced, said means including a gravity operated weight effective to move the optical unit in one direction relative to the pattern.

3. In a duplicating machine, a support for a pattern having a surface to be reproduced, an optical unit for scanning the surface to be reproduced and comprising, a photoelectric cell device and an illuminating device for casting a light image on the surface of the object having a contour line representing on section of said surface as viewed from the photoelectric cell device, means supporting the optical unit for movement toward and away from the pattern to maintain the point of intersection of the scanning line of the photoelectric cell device and the contour line of the image at the surface of the pattern to be reproduced, a tool movable as a unit with the optical unit, and a gravity operated weight resisting movement of the optical unit and tool in one direction.

4. In a duplicating machine, a support for a pattern having a surface to be reproduced, an optical unit for scanning the surface to be reproduced and comprising, a photoelectric cell device and illuminating device, means associated with the illuminating device for casting a light image on the surface of the pattern to be reproduced, a light sensitive cell associated with the photoelectric cell device, a plate supported between the pattern and light sensitive cell and having an aperture therethrough, means for focusing the light image reflected from the pattern onto the plate, and means controlled by the photoelectric cell device for moving the optical unit toward and away from the pattern to maintain one edge of the reflected image in registration with the aperture, said means including a gravity operated weight effective to move the optical unit in one direction relative to the pattern and to resist movement of the optical unit in the opposite direction relative to the pattern.

5. In a duplicating machine, supporting means for a pattern and a work blank, an optical unit for scanning the pattern and comprising, a photoelectric cell and a source of illumination effective to direct a light image on the surface of the object to be reproduced having a contour line representing one section of the object as viewed from the photoelectric cell, a tool positioned opposite the work blank, supporting means for the tool and optical unit movable toward and away from the work blank, means controlled by the light sensitive cell for moving the supporting means in the aforesaid directions to maintain the point of intersection of the scanning line of the photoelectric cell and the contour line of the image at the surface of the pattern to be reproduced, said means including a gravity operated weight connected to the supporting means tending to move the latter in one direction, and a spring arranged in said connection to minimize the inertia of the weight upon movement of the supporting means in the opposite direction.

6. In a duplicating machine, supporting means for a pattern and a work blank, an optical unit for scanning the surface of the work to be reproduced and comprising, a source of illumination for casting light and shadow upon the surface of the object to be reproduced and a light sensitive cell controlled by the light reflected from the surface of the pattern, a tool positioned opposite the work blank, supporting means for the tool and optical unit movable toward and away from the work blank, a fluid pressure operated ram controlled by the light sensitive cell and operatively connected to the supporting means for moving the latter in one direction, and gravity operated means operatively connected to the ram for moving the latter and supporting means in the opposite direction under control of the photoelectric cell.

7. In a duplicating machine, supporting means for a pattern and a work blank, an optical unit for scanning the surface of the pattern to be reproduced and comprising a light sensitive cell and a source of illumination operable to cast a light image on the surface of the pattern to be reproduced having a contour line representing one section of said surface as viewed from the photoelectric cell, a tool positioned opposite the work blank, supporting means for the tool and optical unit movable toward and away from the work blank, means controlled by the photoelectric cell for moving the supporting means in the aforesaid directions to maintain the point of intersection of the scanning line of the photoelectric cell and contour line of the image at the surface of the pattern, said means including a reciprocable ram operatively connected to the supporting means and movable in one direction by fluid under pressure, a gravity operated weight operatively connected to the supporting means for moving the latter in the opposite direction, and yieldable means in said connection effective to minimize the inertia of the weight upon movement of the supporting means in the first mentioned direction.

8. In a duplicating machine, supporting means for a pattern and a work blank, a ram mounted for reciprocation in directions toward and away from the work blank, a revoluble tool mounted on the ram opposite the work blank, an optical unit for scanning the surface of the pattern to be reproduced and comprising, a light sensitive cell and a source of illumination for casting a light image on the surface of the pattern with a sharply defined contour line representing one section of the pattern as viewed from the light sensitive cell, and means under the control of the photoelectric cell for reciprocating the ram to maintain the point of intersection of the scanning line of the cell and contour line of the image at the surface of the pattern, said means including a gravity operated weight supported in a manner to exert a motivating force on the ram in one direction.

9. In a duplicating machine, supporting means for a pattern and a work blank, a member supported for reciprocation toward and away from the pattern and work blank, a revoluble tool mounted on the member opposite the work blank, an arm pivotally adjustably mounted on said member for movement therewith as a unit and carrying an optical unit in a position adjacent the pattern for scanning the surface of the pattern to be reproduced, said optical unit having a source of illumination for casting light on the surface of the pattern to be reproduced and having a light sensitive cell controlled by the light reflected from the pattern, means controlled by the light sensitive cell for reciprocating said member, and means for adjusting the arm relative to the member to position the optical unit relative to the pattern.

10. In a duplicating machine, supporting means for a pattern and a work blank, a ram supported for reciprocation in directions toward and away from the work blank and pattern, a member movable with said ram and adjustable relative to said ram, a tool carried by the member opposite the work blank, an optical unit for scanning the pattern also carried by the member, said optical unit having a source of illumination

for casting a light image on the surface of the pattern to be reproduced and having a photoelectric cell controlled by the light reflected from the pattern, means controlled by the photoelectric cell for reciprocating said ram, and means for adjusting the member to vary the positions of the tool and optical unit relative to the work blank and pattern respectively.

11. In a duplicating machine, supporting means for a pattern and a work blank, a ram mounted for reciprocation in directions toward and away from the pattern and work blank, a member mounted upon the ram for rocking movement about an axis extending transversely to the path of movement of the ram, a tool mounted upon the member and positioned opposite the work blank, an optical unit for scanning the surface of the pattern to be reproduced and mounted upon the member, said optical unit having a source of illumination for casting a light image on the surface of the pattern and having a light sensitive cell controlled by the light reflected from the surface of the pattern, means controlled by the photoelectric cell for reciprocating the ram, means for adjusting the member relative to the ram to vary the positions of both the tool and optical unit relative to the work blank and pattern, and means for adjusting the position of the tool relative to the work blank.

12. In a duplicating machine, supporting means for a pattern and a work blank, a ram mounted for reciprocation toward and away from the pattern and work, a member secured to the ram for movement therewith as a unit and adjustable relative to the ram, a tool mounted upon the member opposite the work blank, an arm carried by the member and adjustable relative to the member, an optical system mounted upon the arm opposite the surface of the pattern to be reproduced and effective to scan said surface, said opical unit having a source of illumination for casting a light image on the surface of the pattern to be reproduced and having a light sensitive cell controlled by the light reflected from the pattern, means controlled by the light sensitive cell for reciprocating the ram, means for adjusting the member relative to the ram, and means for adjusting the arm relative to the member.

13. In a duplicating machine, a support for a pattern having a surface to be duplicated, means for producing an image having light and dark portions defining a contour line representing one section of the object, a light sensitive cell device having a line of sight intersecting the contour line and controlled by the intensity of light at opposite sides of the contour line, means controlled by the light sensitive cell device for relatively moving said device and object toward and away from each other to maintain the line of sight of the photoelectric cell device in intersecting relationship with the contour line of the image, a tool and a work blank supported opposite each other and relatively movable toward and away from each other in accordance with the light sensitive cell, and means for dampening relative movement of the light sensitive cell and object to stabilize the action of said tool.

14. In a duplicating machine, supporting means for a pattern and a work blank, a ram mounted for reciprocation toward and away from the pattern and work blank, a member carried by the end of the ram adjacent the pattern and work blank for rocking movement about an axis extending transversely to the axis of reciprocation of the ram, a tool supported on one end of the rockable member in a position opposite the work blank, an optical system mounted on the other end of the rockable member opposite the pattern and supported for sliding movement on said member, said optical unit having a source of illumination for casting a light image on the surface of the pattern and having a light sensitive cell controlled by the light and dark portions of the image, and means controlled by the light sensitive cell for reciprocating the ram.

15. In a duplicating machine, supporting means for a pattern and a work blank, a ram mounted for reciprocation toward and away from the pattern and work blank, a member secured to the ram for movement therewith as a unit, a tool carried by the member and positioned opposite the work blank, an optical system also carried by the ram opposite the surface of the pattern to be reproduced and effective to scan said surface, said optical system having a source of illumination for casting a light image on the surface of the pattern to be reproduced and having a light sensitive cell controlled by the light reflected from the pattern, means controlled by the light sensitive cell for reciprocating the ram, and a support for the optical system on the ram adjustable relative to the ram in the direction of sliding movement of the latter to relatively position the tool with respect to the work blank.

16. In a duplicating machine, supporting means for a pattern and a work blank, a tool supported opposite the work blank, an optical system positioned opposite the pattern and effective to scan a surface of the pattern, said optical system having a source of illumination for casting a beam of light on one surface of the pattern to provide an image on the surface of the pattern having light and dark portions forming a contour line on said surface representing one section of the latter, a light sensitive cell having an aperture arranged in intersecting relationship with the contour line and controlled by light escaping through the aperture, means controlled by the light sensitive cell for relatively moving the pattern and optical system in directions to maintain the aperture in intersecting relationship with the contour line and for effecting a corresponding relative movement between the work blank and tool, and adjustable means operating through the medium of the optical system for relatively positioning the tool and work blank.

17. In a duplicating machine, supporting means for a pattern and a work blank, an optical system having means for casting a beam of light on a surface of the pattern to produce an image on said surface having light and dark portions forming a contour line on the surface representing one section of said surface and having a light sensitive cell provided with an aperture arranged in intersecting relationship with the contour line, means controlled by the light sensitive cell in dependence upon the intensity of light escaping through the aperture for moving the optical system toward and away from the pattern to maintain the aperture in intersecting relation with the contour line, a cutting tool supported opposite the work blank and movable by said last named means in accordance with the operation of the light sensitive cell, and a support for the optical system adjustable relative to the pattern to provide for accurately positioning the tool with respect to the work blank.

EVERETT J. COOK.